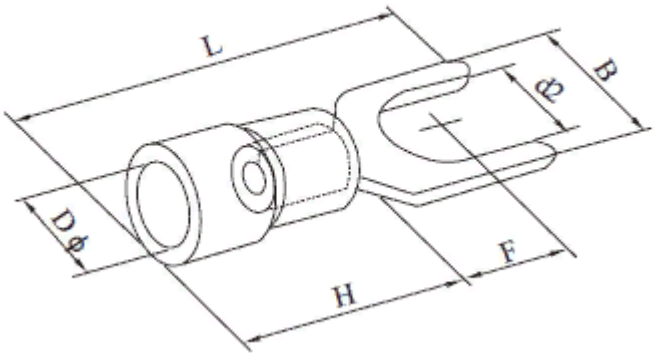

	编 号 Item NO.	美制 螺栓号	螺栓口直径 screw dia. d2(mm)	尺寸 Dimension					颜色 Color
				B (mm)	L (mm)	F (mm)	H (mm)	D φ (mm)	
导线截面: 0.5−1.5mm² (22-16) 最大电流: Imax=19A	SV1.25-3	#4	3.2	5.7	21.2	6.5	10.0	4.3	红 Red
	SVS1.25-3.5	#6	3.7	5.7	21.2	6.5			
	SVL1.25-3.5	#6	3.7	6.4	21.2	6.5			
	SVS1.25-4	#8	4.3	6.4	21.2	6.5			
	SVM1.25-4	#8	4.3	7.2	21.2	6.5			
	SVL1.25-4	#8	4.3	8.1	21.2	6.5			
	SVS1.25-5	#10	5.3	8.1	21.2	6.5			
	SVL1.25-5	#10	5.3	9.5	21.2	6.5			
	SVS1.25-6	1/4	6.5	9.5	21.2	6.5			
	SVL1.25-6	1/4	6.5	12.0	21.2	11.0			
导线截面: 1.5−2.5mm ²(16−14) 最大电流: Imax=27A	SV2-3	#4	3.2	5.7	21.2	6.5	10.0	4.9	兰 blue
	SVS2-3.5	#6	3.7	5.7	21.2	6.5			
	SVL2-3.5	#6	3.7	6.4	21.2	6.5			
	SVS2-4	#8	4.3	6.0	21.2	6.5			
	SVM2-4	#8	4.3	7.2	21.2	6.5			
	SVL2-4	#8	4.3	8.1	21.2	6.5			
	SVS2-5	#10	5.3	8.1	21.2	6.5			
	SVL2-5	#10	5.3	9.5	21.2	6.5			
	SVS2-6	1/4	6.5	9.5	21.2	11.0			
	SVL2-6	1/4	6.5	12.0	21.2	7.0			
导线截面: 2.5−4mm² (14−12) 最大电流: Imax=37A	SV3.5-4	#8	4.3	8.0	24.8	7.0	12.5	6.2	黑 black
	SV3.5-5	#10	5.3	8.0	24.8	12.1			
	SV3.5-6	1/4	6.5	12.0	28.0	7.5			
导线截面: 4−6mm² (12−10) 最大电流: Imax=48A	SV5.5-3.5	#6	3.7	8.3	25.2	7.5	12.5	6.7	黄 yellow
	SVS5.5-4	#8	4.3	8.3	25.2	7.5			
	SVL5.5-4	#8	4.3	9.0	23.9	7.5			
	SV5.5-5	#10	5.3	9.0	23.9	7.5			
	SVS5.5-6	1/4	6.5	9.0	23.9	7.5			
	SVL5.5-6	1/4	6.5	12.0	31.2	12.0			
	SV5.5-8	5/16	8.4	14.0	30.0	11.5			