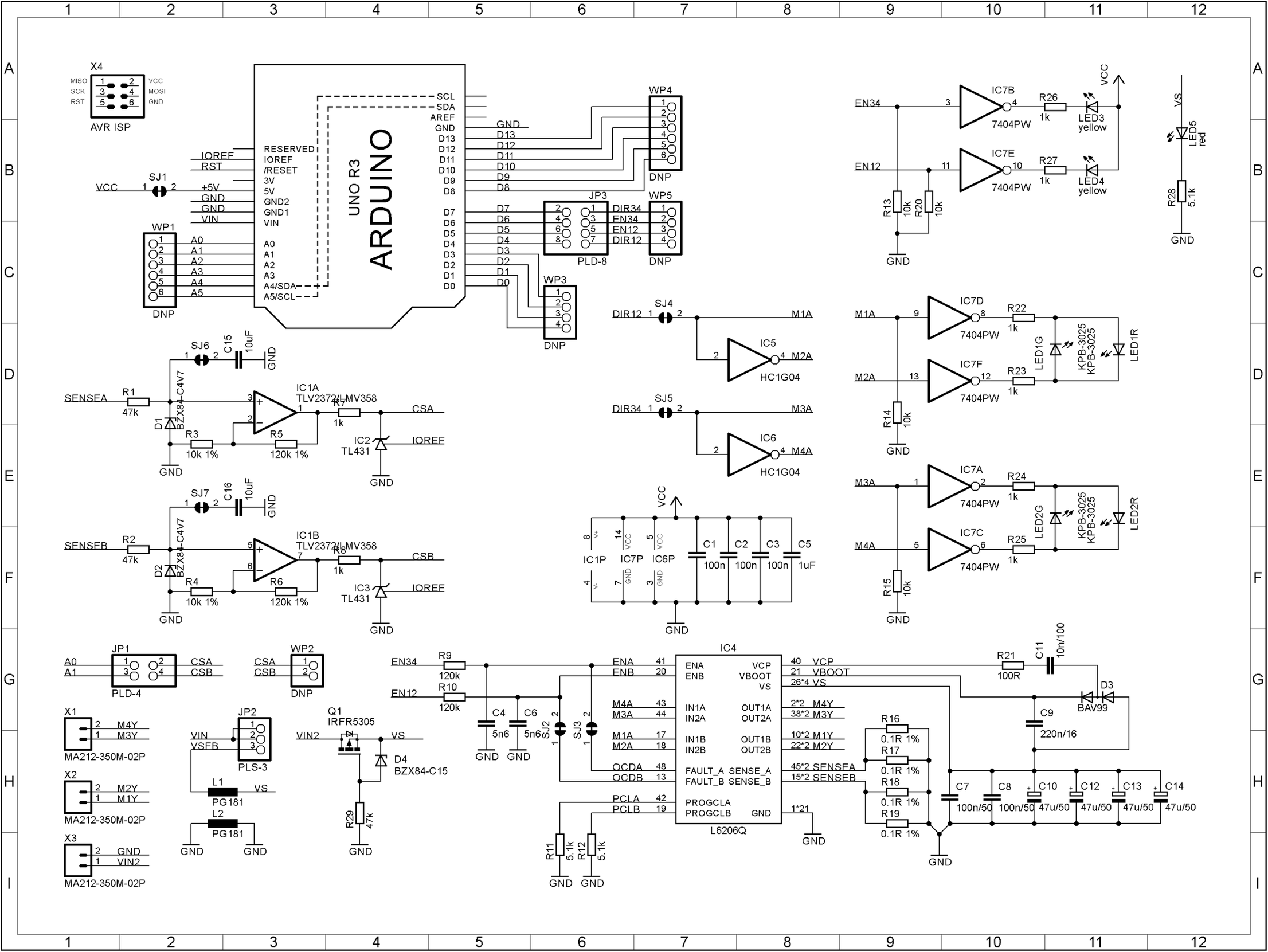
X4
MISO
SCK
RST
VCC
MOSI
GND
AVR ISP
UNO R3
ARDUINO
RESERVED
IOREF
/RESET
3V
5V
GND2
GND1
VIN
A0
A1
A2
A3
A4/SDA
A5/SCL
SCL
SDA
AREF
GND
D13
D12
D11
D10
D9
D8
D7
D6
D5
D4
D3
D2
D1
D0
SJ1
+5V
WP1
DNP
WP4
WP5
WP3
JP3
PLD-8
DIR34
EN34
EN12
DIR12
SJ4
SJ5
M1A
M2A
M3A
M4A
IC5
IC6
HC1G04
IC7B
IC7E
IC7D
IC7F
IC7A
IC7C
7404PW
R26
R27
R22
R23
R24
R25
1k
LED3 yellow
LED4 yellow
LED1G
LED1R
LED2G
LED2R
KPB-3025
R13
R20
R14
R15
10k
VS
LED5 red
R28
5.1k
SJ6
SJ7
C15
C16
10uF
SENSEA
SENSEB
R1
R2
47k
D1
D2
BZX84-C4V7
R3
R4
10k 1%
R5
R6
120k 1%
IC1A
IC1B
TLV2372/LMV358
R7
R8
CSA
CSB
IC2
IC3
TL431
IOREF
IC1P
IC7P
IC6P
V+
V-
C1
C2
C3
C5
100n
1uF
JP1
PLD-4
WP2
X1
X2
X3
MA212-350M-02P
M4Y
M3Y
M2Y
M1Y
GND
VIN2
JP2
PLS-3
VIN
VSFB
L1
L2
PG181
Q1
IRFR5305
D4
BZX84-C15
R29
47k
R9
R10
120k
C4
C6
5n6
SJ2
SJ3
IC4
L6206Q
ENA
ENB
IN1A
IN2A
IN1B
IN2B
OCDA
OCDB
PCLA
PCLB
FAULT_A
FAULT_B
PROGCLA
PROGCLB
VCP
VBOOT
OUT1A
OUT2A
OUT1B
OUT2B
SENSE_A
SENSE_B
SENSEA
SENSEB
R11
R12
R16
R17
R18
R19
0.1R 1%
R21
100R
C11
10n/100
D3
BAV99
C9
220n/16
C7
C8
C10
C12
C13
C14
100n/50
47u/50