THIS DRAWING IS UNPUBLISHED. RELEASED FOR PUBLICATION 2007
C COPYRIGHT 2007 BY TYCO ELECTRONICS CORPORATION. ALL RIGHTS RESERVED.

LOC	DIST
AI	-

REVISIONS

P	LTR	DESCRIPTION	DATE	DWN	APVD
	A10	Dash number 6-962915-6 added	07AUG08	Mey	Brun
	A11	Wrong notes on Table corrected	05OCT08	Arb	Brun
	A12	0.32±0.05 added	02MAR09	Mey	Brun
	A13	Column Sealing plug and Text SINGLE WIRE SEAL ... added	30JUL09	Fru	Brun

STRIP FORM / Bandware

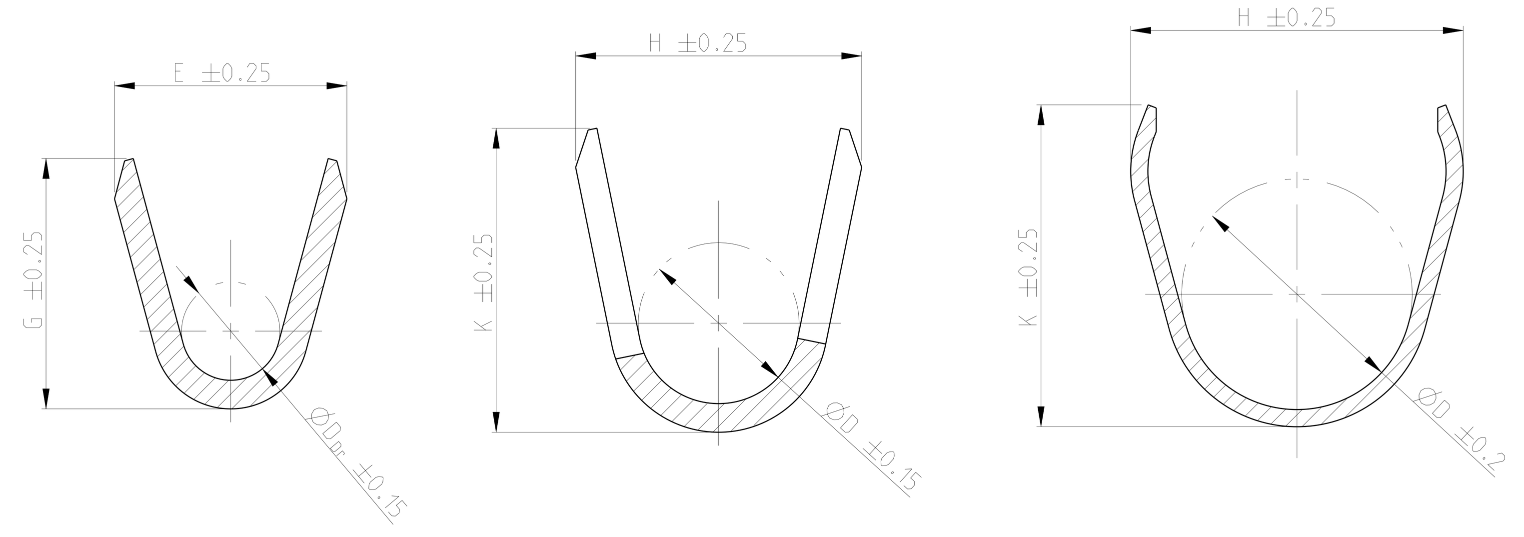

WIRE CRIMP Drahtcrimp

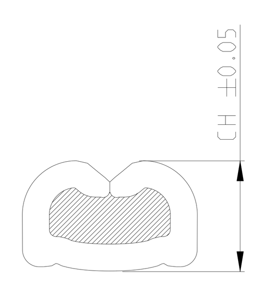

LOOSE PIECE / Einzelausfuehrung

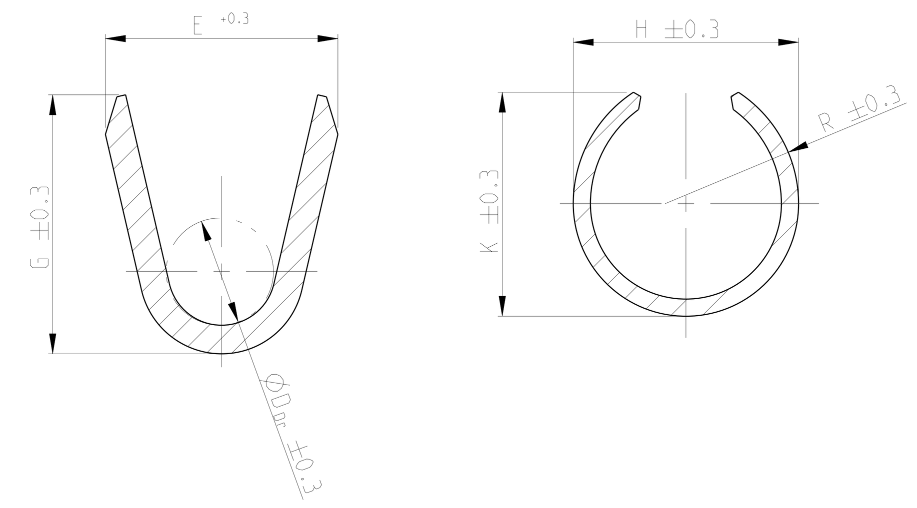

FLR- / FLK - WIRE
FLR- / FLK - Leitung

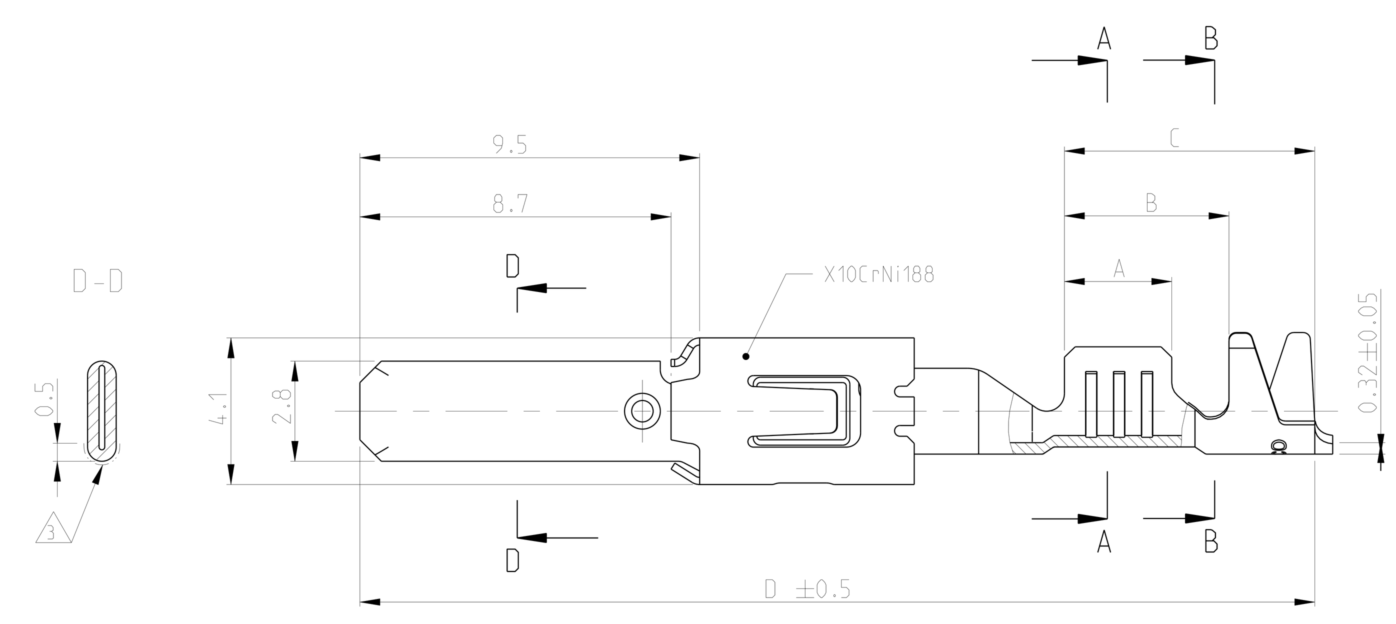

SINGLE WIRE SEAL
Einzeldichtungssystem

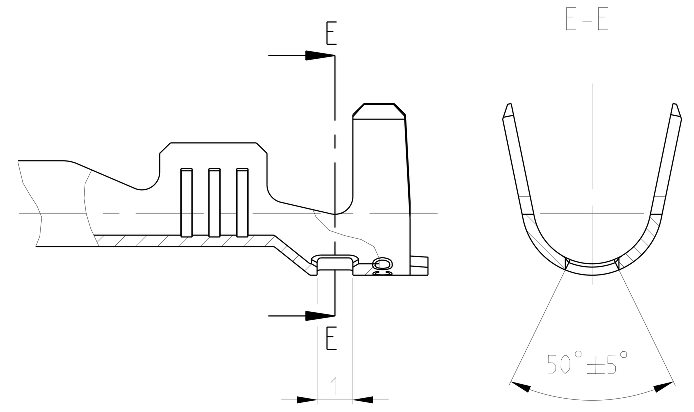

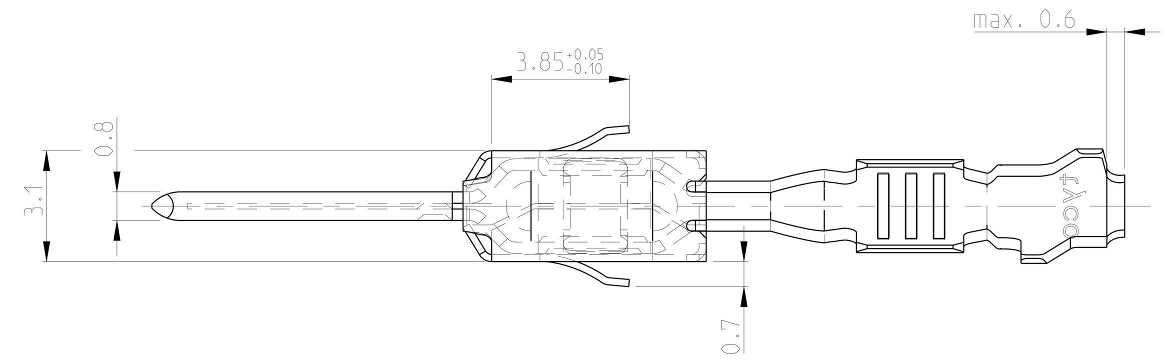

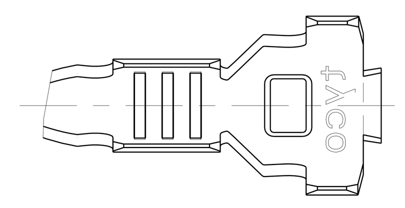

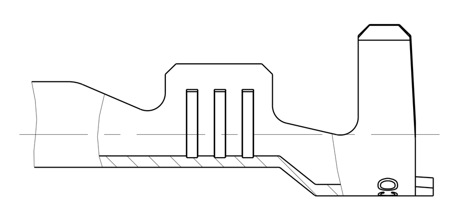

DESIGN FOR PN 968946

Ausfuehrung PN 968946

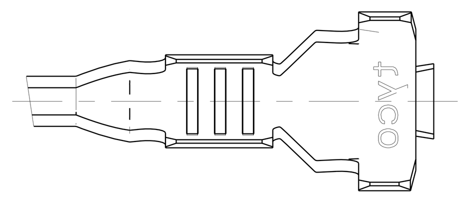

System	TE ORDER-NO. STRIPFORM Bandware	REV	TE ORDER-NO LOOSE PIECE Einzelausfuehrung	MATERIAL Werkstoff	SURFACE Oberflaeche	DGB mm²	INSULATIONØ IsolationsØ mm	STRIP FORM (Bandware) WIRE CRIMP Drahtcrimp	STRIP FORM (Bandware) INSUL. CRIMP Isolationscrimp	WIRE CRIMP HEIGTH CH Drahtcrimphoehe CH	LOOSE PIECE (Einzelausfuehrung) WIRE CRIMP Drahtcrimp	LOOSE PIECE (Einzelausfuehrung) INSUL. CRIMP Isolationscrimp	APPLICATION TOOL Anschlagwerkzeug	HAND TOOL Handzange	A	B	C	D	TE ORDER-NO. SINGLE WIRE SEAL Einzeldichtungssystem (CAVITY DIAMETER) (Kammerdurchmesser)	TE ORDER-NO. SEALING PLUG Blindstopfen
								SEE / siehe SECTION A-A Schnitt A-A	SEE / siehe SECTION B-B Schnitt B-B	SEE / siehe WIRE CRIMP Drahtcrimp	SEE / siehe SECTION A-A Schnitt A-A	SEE / siehe SECTION B-B Schnitt B-B								
SINGLE WIRE SEAL / Einzeldichtungssystem	1-1719504-2	A	-	CuSn4	△1	12 AWG	max. 3.0	E = 4.0 G = 4.2 D_{Dr} = 2.0	A H = 5.3 K = 5.0 D = 3.6	AWG 12 = 2.0	-	-	1852291-3	-	3.5	6.0	7.6	26.8	△5	828922-1
	1-1719504-1	A	-		△4															
	3-968947-1	A	3-968966-1	CuSn0.20	△4	>2.5 - 4.0 FLR	max. 3.7	E = 4.5 G = 4.7 D_{Dr} = 2.3	B H = 6.2 K = 6.0 D = 4.3	4.0 mm² = 2.25	DIMENSION SEE STRIP FORM Masse siehe Bandware		MQC APPLICATOR 2-541537-2	539635-1 MATRIZE : 539727-2	4.3	6.0	8.5	28.5	828985 (Ø6.4) △6	828986-1
	2-968947-2	A	2-968966-2	CuFe	△1															
	2-968947-1	A	2-968966-1		△4															
	1-968947-2	A	1-968966-2	CuSn4	△1															
	1-968947-1	A	1-968966-1		△4															
	2-962916-3	E	2-963749-3	CuFe	△2	>1.0 - 2.5 FLR	max. 3.0	E = 3.6 G = 3.8 D_{Dr} = 1.7	A H = 5.3 K = 5.0 D = 3.6	2.5 mm² = 1.88 2.0 mm² = 1.73 1.5 mm² = 1.58	E = 2.8 G = 3.9 D_{Dr} = 1.7	H = 4.8 K = 4.5 R = 2.8	MQC APPLICATOR 2-878560-2	734440-1	3.5	6.0	7.6	26.8	828905 (Ø5.0)	828922-1
	2-962916-2	E	2-963749-2		△1															
	2-962916-1	E	2-963749-1		△4															
	1-962916-3	E	1-963749-3	CuSn4	△2															
	1-962916-2	E	1-963749-2		△1															
	1-962916-1	E	1-963749-1		△4															
	2-962915-3	E	2-963748-3	CuFe	△2	0.5 - 1.0 FLR	max. 2.1	E = 2.6 G = 2.9 D_{Dr} = 1.2	A H = 5.0 K = 4.8 D = 3.3	1.0 mm² = 1.36 0.75 mm² = 1.27 0.5 mm² = 1.18	E = 2.2 G = 2.9 D_{Dr} = 1.1	H = 4.6 K = 4.3 R = 2.3	MQC APPLICATOR 2-878559-2	734438-1	3.0	5.4	7.0	26.8	828904 (Ø5.0)	
	2-962915-2	E	2-963748-2		△1															
	2-962915-1	E	2-963748-1		△4															
	6-962915-6	E	-	CuSn4	△7 △2															
	1-962915-3	E	1-963748-3		△2															
	1-962915-2	E	1-963748-2		△1															
	1-962915-1	E	1-963748-1		△4															
	1-965982-3	A	1-965983-3	CuSn4	△2	0.2 - 0.5 FLK	max. 2.1	E = 2.1 G = 2.1 D_{Dr} = 0.8	A H = 4.7 K = 4.5 D = 3.2	0.5 mm² = 1.12 0.35 mm² = 1.05 0.2 mm² = 0.98	E = 1.7 G = 2.15 D_{Dr} = 0.8	H = 4.2 K = 4.15 R = 2.4	MQC APPLICATOR 2-878558-2	539635-1 MATRIZE : 539737-2	2.5	4.9	6.5	26.8	828904 (Ø5.0)	
	1-965982-1	A	1-965983-1		△4															
UNSEALED / ungedichtet	2-962843-3	C	2-963747-3	CuFe	△2	>1.0 - 2.5 FLK	2.4 - 3.7	E = 3.6 G = 3.8 D_{Dr} = 1.7	A H = 5.5 K = 5.7 D = 3.2	2.5 mm² = 1.88 1.5 mm² = 1.58	E = 2.8 G = 3.9 D_{Dr} = 1.7	H = 4.2 K = 5.1 R = 2.4	MQC APPLICATOR 2-878552-2	734417-3	3.6	5.2	8.9	28.6		
	2-962843-2	C	2-963747-2		△1															
	2-962843-1	C	2-963747-1		△4															
	1-962843-3	C	1-963747-3	CuSn4	△2															
	1-962843-2	C	1-963747-2		△1															
	1-962843-1	C	1-963747-1		△4															
	3-968946-1	A	3-968965-1	CuSn0.20	△4	>2.5 - 4.0 FLR	2.7 - 3.7	E = 4.5 G = 4.7 D_{Dr} = 2.3	A H = 5.7 K = 5.9 D = 3.3	4.0 mm² = 2.25	E = 3.4 G = 4.7 D_{Dr} = 2.3	H = 4.4 K = 5.9 R = 2.6	MQC APPLICATOR 2-541534-2	539635-1 MATRIZE : 539723-2	4.3	6.6	8.5	28.5		
	2-968946-2	A	2-968965-2	CuFe	△1															
	2-968946-1	A	2-968965-1		△4															
	1-968946-2	A	1-968965-2	CuSn4	△1															
	1-968946-1	A	1-968965-1		△4															
	2-962842-3	E	2-963746-3	CuFe	△2	>1.0 - 2.5 FLR	2.1 - 2.9	E = 3.6 G = 3.8 D_{Dr} = 1.7	A H = 4.3 K = 4.5 D = 2.6	2.5 mm² = 1.88 2.0 mm² = 1.73 1.5 mm² = 1.58	E = 2.8 G = 3.9 D_{Dr} = 1.7	H = 3.6 K = 4.1 R = 2.1	MQC APPLICATOR 2-878551-2	734417-2	3.6	5.2	8.2	27.9		
	2-962842-2	E	2-963746-2		△1															
	2-962842-1	E	2-963746-1		△4															
	1-962842-3	E	1-963746-3	CuSn4	△2															
	1-962842-2	E	1-963746-2		△1															
	1-962842-1	E	1-963746-1		△4															
	2-962841-3	F	2-963745-3	CuFe	△2	0.5 - 1.0 FLR	1.4 - 2.1	E = 2.5 G = 2.8 D_{Dr} = 1.1	A H = 3.2 K = 3.4 D = 1.8	1.0 mm² = 1.36 0.75 mm² = 1.27 0.5 mm² = 1.18	E = 2.2 G = 2.8 D_{Dr} = 1.1	H = 2.8 K = 3.0 R = 1.6	MQC APPLICATOR 2-878550-2	734417-1	3.0	4.6	7.0	26.7		
	2-962841-2	F	2-963745-2		△1															
	2-962841-1	F	2-962841-1		△4															
	1-962841-3	F	1-963745-3	CuSn4	△2															
	1-962841-2	F	1-963745-2		△1															
	1-962841-1	F	1-963745-1		△4															
	2-963860-3	B	2-963861-3	CuFe	△2	0.2 - 0.5 FLR	1.3 - 1.6	E = 2.1 G = 2.1 D_{Dr} = 0.8	A H = 2.9 K = 2.9 D = 1.4	0.5 mm² = 1.12 0.35 mm² = 1.05 0.2 mm² = 0.98	E = 1.7 G = 2.1 D_{Dr} = 0.8	H = 2.5 K = 2.5 R = 1.4	MQC APPLICATOR 2-878549-2	734538-1	2.5	3.7	5.8	25.5		
	2-963860-2	B	2-963861-2		△1															
	2-963860-1	B	2-963861-1		△4															
	1-963860-3	B	1-963861-3	CuSn4	△2															
	1-963860-2	B	1-963861-2		△1															
	1-963860-1	B	1-963861-1		△4															

CRIMP DIMENSION mm
Crimpabmessungen mm

EXTRACTION TOOL
Ausdrueckwerkzeug
No. 968107-1

NOTES
Bemerkungen

△1 CONTACT AREA PRE SILVER MIN. 3 µm
CANTILEVER SPRING PLAIN
Kontaktzone vorversilbert min. 3 µm
Ueberfeder blank

△2 CONTACT BODY Ni-PLATING MIM. 0.5 µm; CONTACT AREA PRE-GOLD MIN. 0.6 µm
OVER NICKEL; CRIMP AREA PRE-TIN
CANTILEVER SPRING PLAIN
Kontaktkoerper vernickelt min. 0.5 µm; Kontaktzone vorvergoldet min. 0.6 µm ueber Nickel
Crimpzone vorverzinnt; Ueberfeder blank

△3 _.._.._ IN THIS AREA CRACK SHAPING AT THE SURFACE PERMISSIBLE
In diesem Bereich Rissbildung in der Oberflaeche zulaessig

△4 PRE-TIN MIN. 1 µm; CANTILEVER SPRING PLAIN
vorverzinnt min. 1 µm; Ueberfeder blank

△5 AWG 12 TXL 828905-1 OR / oder 282536-1
AWG 12 GXL 638865-1

△6 ATTENTION! CONSTRUCTION OF THE CONTACT CAVITY IN THE AREA
OF THE SINGLE WIRE SEAL IS Ø$6.4^{+0.1}_{-0.05}$
Achtung! Die Kammer ist im Bereich der Einzeldichtung
auf Ø$6.4^{+0.1}_{-0.05}$ auszulegen

△7 PUNCHED WITH VOLATILIZING STAMPING-OIL
Gestanzt mit verfluechtigendem Stanzoel

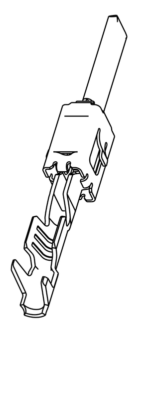

THIS DRAWING IS A CONTROLLED DOCUMENT FOR TYCO ELECTRONICS CORPORATION. IT IS SUBJECT TO CHANGE AND THE CONTROLLING ENGINEERING ORGANIZATION SHOULD BE CONTACTED FOR THE LATEST REVISION.

DIMENSIONS: mm
TOLERANCES UNLESS OTHERWISE SPECIFIED: 0 PLC ± ; 1 PLC ± 0.2; 2 PLC ± ; 3 PLC ± ; 4 PLC ± ; ANGLES ± 1.5°
MATERIAL -
FINISH -
DWN K.Gerlach 14JUN99
CHK M.Bleicher -
APVD - -
PRODUCT SPEC 108-18063
APPLICATION SPEC 114-18051
WEIGHT -
CUSTOMER DRAWING

Tyco Electronics
tyco Electronics AMP GmbH
64625 Bensheim (Germany)

NAME
PRODUCT GROUP DRAWING FOR TAB 2.8x0.8
Produktgruppenzeichnung fuer
Flachstecker 2.8x0.8

SIZE	CAGE CODE	DRAWING NO	RESTRICTED TO
A0	00779	C- 1355052	-

SCALE 8:1 SHEET 1 OF 1 REV A13

AMP 4806 REV 31MAR2000
Pro/ENGINEER DRAWING