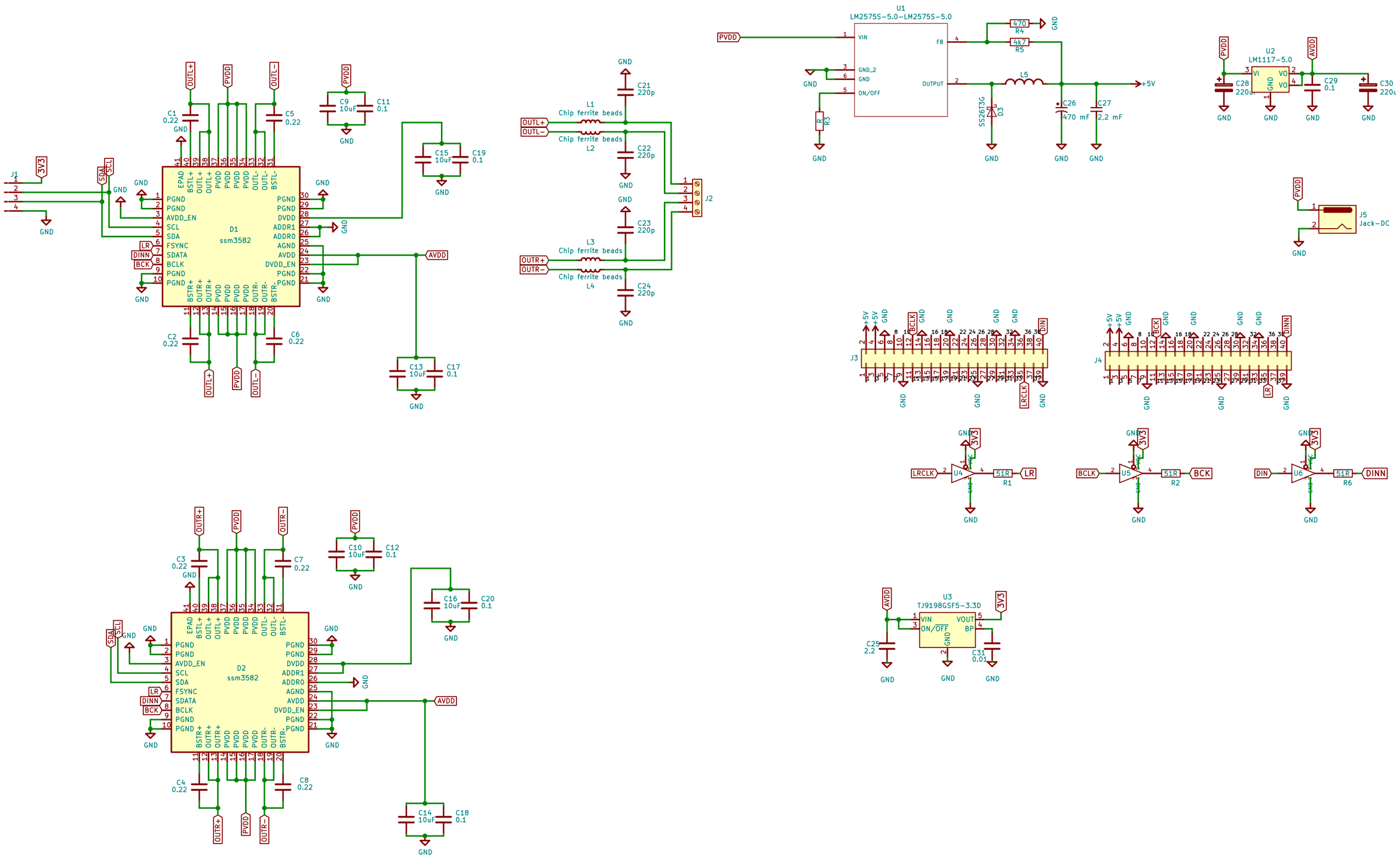
D1
ssm3582
D2
ssm3582
U1
LM2575S-5.0-LM2575S-5.0
U2
LM1117-5.0
U3
TJ9198GSF5-3.3D
U4
U5
U6
J1
J2
J3
J4
J5
Jack-DC
L1
L2
L3
L4
L5
Chip ferrite beads
D3
SS2613G
R1
R2
R3
R4
R5
R6
C1
C2
C3
C4
C5
C6
C7
C8
C9
C10
C11
C12
C13
C14
C15
C16
C17
C18
C19
C20
C21
C22
C23
C24
C25
C26
C27
C28
C29
C30
C31
PVDD
AVDD
3V3
OUTL+
OUTL-
OUTR+
OUTR-
LR
DINN
BCK
SDA
SCL
LRCLK
BCLK
DIN
+5V
GND