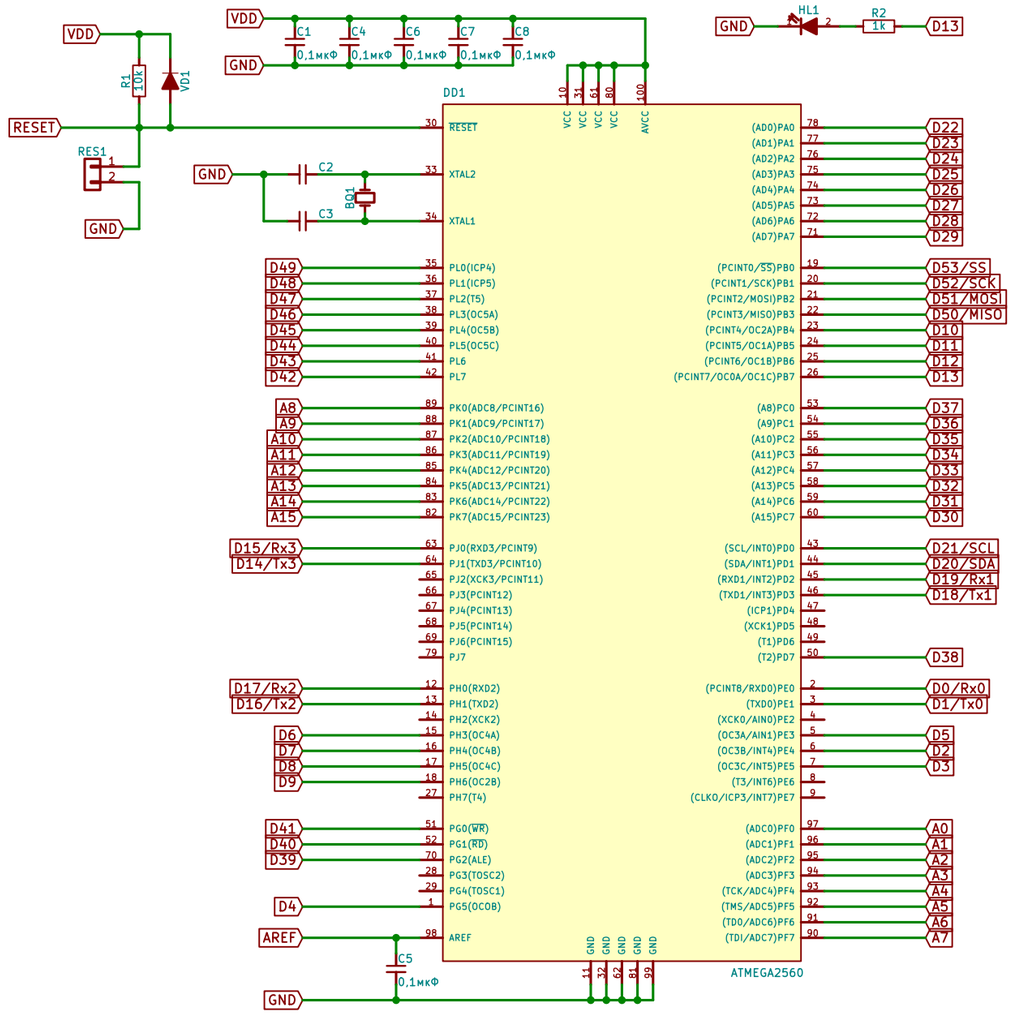
DD1
ATMEGA2560
RESET
RES1
R1 10k
VD1
VDD
GND
C1 0,1мкФ
C4 0,1мкФ
C6 0,1мкФ
C7 0,1мкФ
C8 0,1мкФ
HL1
R2 1k
D13
C2
C3
BQ1
C5 0,1мкФ
AREF
XTAL1
XTAL2
VCC
AVCC
PL0(ICP4)
PL1(ICP5)
PL2(T5)
PL3(OC5A)
PL4(OC5B)
PL5(OC5C)
PL6
PL7
PK0(ADC8/PCINT16)
PK1(ADC9/PCINT17)
PK2(ADC10/PCINT18)
PK3(ADC11/PCINT19)
PK4(ADC12/PCINT20)
PK5(ADC13/PCINT21)
PK6(ADC14/PCINT22)
PK7(ADC15/PCINT23)
PJ0(RXD3/PCINT9)
PJ1(TXD3/PCINT10)
PJ2(XCK3/PCINT11)
PJ3(PCINT12)
PJ4(PCINT13)
PJ5(PCINT14)
PJ6(PCINT15)
PJ7
PH0(RXD2)
PH1(TXD2)
PH2(XCK2)
PH3(OC4A)
PH4(OC4B)
PH5(OC4C)
PH6(OC2B)
PH7(T4)
PG0(WR)
PG1(RD)
PG2(ALE)
PG3(TOSC2)
PG4(TOSC1)
PG5(OC0B)
(AD0)PA0
(AD1)PA1
(AD2)PA2
(AD3)PA3
(AD4)PA4
(AD5)PA5
(AD6)PA6
(AD7)PA7
(PCINT0/SS)PB0
(PCINT1/SCK)PB1
(PCINT2/MOSI)PB2
(PCINT3/MISO)PB3
(PCINT4/OC2A)PB4
(PCINT5/OC1A)PB5
(PCINT6/OC1B)PB6
(PCINT7/OC0A/OC1C)PB7
(A8)PC0
(A9)PC1
(A10)PC2
(A11)PC3
(A12)PC4
(A13)PC5
(A14)PC6
(A15)PC7
(SCL/INT0)PD0
(SDA/INT1)PD1
(RXD1/INT2)PD2
(TXD1/INT3)PD3
(ICP1)PD4
(XCK1)PD5
(T1)PD6
(T2)PD7
(PCINT8/RXD0)PE0
(TXD0)PE1
(XCK0/AIN0)PE2
(OC3A/AIN1)PE3
(OC3B/INT4)PE4
(OC3C/INT5)PE5
(T3/INT6)PE6
(CLKO/ICP3/INT7)PE7
(ADC0)PF0
(ADC1)PF1
(ADC2)PF2
(ADC3)PF3
(TCK/ADC4)PF4
(TMS/ADC5)PF5
(TDO/ADC6)PF6
(TDI/ADC7)PF7

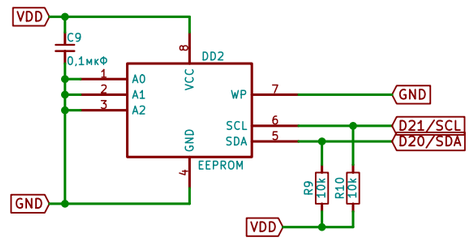
DD2
EEPROM
VDD
GND
C9 0,1мкФ
A0
A1
A2
WP
SCL
SDA
VCC
R9 10k
R10 10k
D21/SCL
D20/SDA

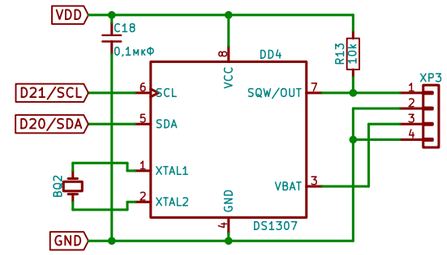
DD4
DS1307
VDD
GND
C18 0,1мкФ
D21/SCL
D20/SDA
SCL
SDA
XTAL1
XTAL2
BQ2
SQW/OUT
VBAT
VCC
R13 10k
XP3

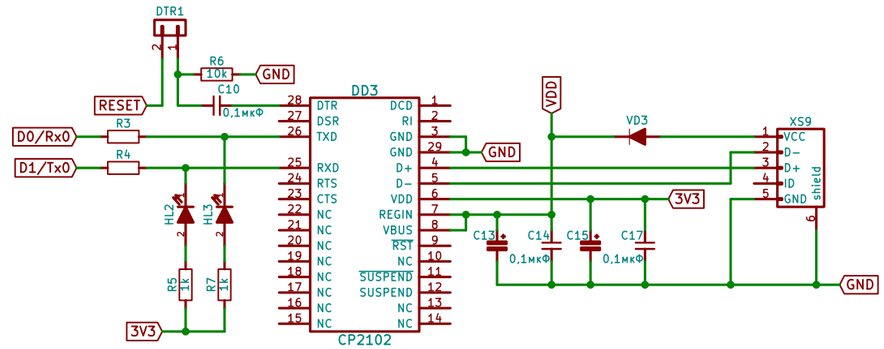
DD3
CP2102
DTR1
RESET
D0/Rx0
D1/Tx0
R3
R4
R6 10k
C10 0,1мкФ
HL2
HL3
R5 1k
R7 1k
3V3
VDD
GND
VD3
XS9
shield
C13 0,1мкФ
C14
C15 0,1мкФ
C17
DTR
DSR
TXD
RXD
RTS
CTS
DCD
RI
D+
D−
VBUS
RST
SUSPEND
REGIN
NC

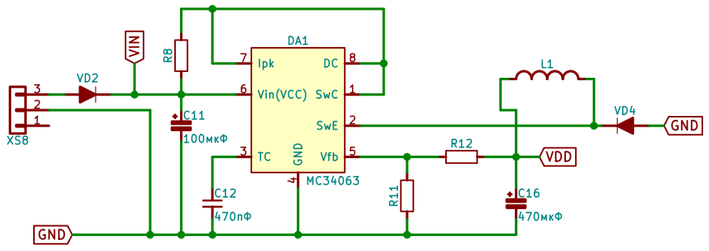
DA1
MC34063
XS8
VD2
VIN
R8
C11 100мкФ
C12 470пФ
L1
VD4
R12
R11
C16 470мкФ
GND
VDD
Ipk
Vin(VCC)
TC
DC
SwC
SwE
Vfb

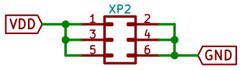
XP2
VDD
GND

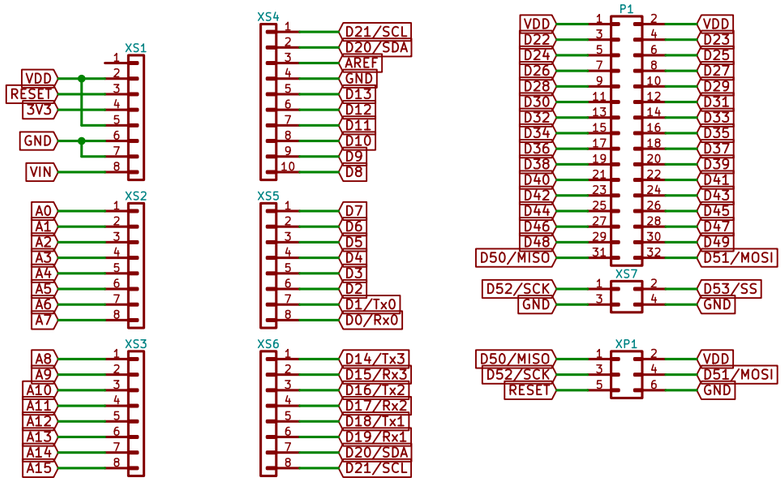
XS1
XS2
XS3
XS4
XS5
XS6
XS7
P1
XP1
VDD
RESET
3V3
GND
VIN
D21/SCL
D20/SDA
AREF
D53/SS
D52/SCK
D51/MOSI
D50/MISO