STD16N50M2, STF16N50M2, STP16N50M2

Datasheet

N-channel 500 V, 0.24 Ω typ., 13 A MDmesh™ M2 Power MOSFETs in DPAK, TO-220FP and TO-220 packages

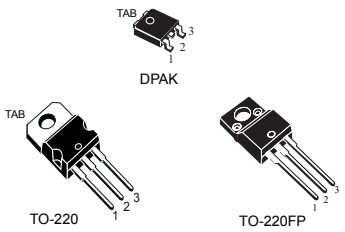

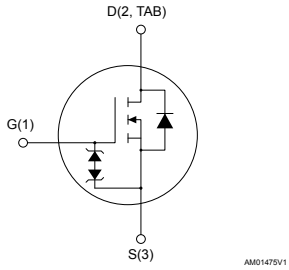

Product status link
STD16N50M2
STF16N50M2
STP16N50M2

Features

Order code	V_{DS} at T_J max.	$R_{DS(on)}$ max.	I_D	Packages
STD16N50M2	550 V	0.28 Ω	13 A	DPAK
STF16N50M2				TO-220FP
STP16N50M2				TO-220

- Extremely low gate charge
- Excellent output capacitance (C_{OSS}) profile
- 100% avalanche tested
- Zener-protected

Applications

- Switching applications

Description

These devices are N-channel Power MOSFETs developed using the MDmesh™ M2 technology. Thanks to their strip layout and improved vertical structure, these devices exhibit low on-resistance and optimized switching characteristics, rendering them suitable for the most demanding high-efficiency converters.

1 Electrical ratings

Table 1. Absolute maximum ratings

Symbol	Parameter	Value			Unit
		DPAK	TO-220	TO-220FP	
V_{GS}	Gate-source voltage	±25			V
I_D	Drain current (continuous) at T_C = 25 °C	13			A
I_D	Drain current (continuous) at T_C= 100 °C	8			A
I_{DM} (1)	Drain current (pulsed)	52			A
P_{TOT}	Total power dissipation at T_C = 25 °C	110		25	W
dv/dt (2)	Peak diode recovery voltage slope	15			V/ns
dv/dt (3)	MOSFET dv/dt ruggedness	50			V/ns
V_{ISO}	Insulation withstand voltage (RMS) from all three leads to external heat sink (t = 1 s, T_C = 25 °C)			2500	V
T_{stg}	Storage temperature range	-55 to 150			°C
T_j	Operating junction temperature range				

1. *Pulse width is limited by safe operating area.*
2. *I_{SD} ≤ 13 A, di/dt ≤ 400 A/µs, $V_{DS\ peak}$ < $V_{(BR)DSS}$, V_{DD} = 80% $V_{(BR)DSS}$*
3. *V_{DS} ≤ 400 V*

Table 2. Thermal data

Symbol	Parameter	Value			Unit
		DPAK	TO-220	TO-220FP	
$R_{thj\text{-}case}$	Thermal resistance junction-case	1.14		5	°C/W
$R_{thj\text{-}amb}$	Thermal resistance junction-ambient		62.5		
$R_{thj\text{-}pcb}$ (1)	Thermal resistance junction-pcb	50			

1. *When mounted on 1 inch² FR-4, 2 Oz copper board.*

Table 3. Avalanche characteristics

Symbol	Parameter	Value	Unit
I_{AR}	Avalanche current, repetitive or non-repetitive (pulse width limited by T_{jmax})	4	A
E_{AS}	Single pulse avalanche energy (starting T_j = 25 °C, I_D = I_{AR}, V_{DD} = 50 V)	215	mJ

2 Electrical characteristics

(T_C = 25 °C unless otherwise specified).

Table 4. On /off states

Symbol	Parameter	Test conditions	Min.	Typ.	Max.	Unit
$V_{(BR)DSS}$	Drain-source breakdown voltage	V_{GS} = 0 V, I_D = 1 mA	500			V
I_{DSS}	Zero gate voltage drain current	V_{GS} = 0 V, V_{DS} = 500 V			1	µA
		V_{GS} = 0 V, V_{DS} = 500 V, T_C = 125 °C			100	µA
I_{GSS}	Gate-body leakage current	V_{DS} = 0 V, V_{GS}[1] = ±25 V			±10	µA
$V_{GS(th)}$	Gate threshold voltage	V_{DS} = V_{GS}, I_D = 250 µA	2	3	4	V
$R_{DS(on)}$	Static drain-source on-resistance	V_{GS} = 10 V, I_D = 6.5 A		0.24	0.28	Ω

1. *Defined by design, not subject to production test*

Table 5. Dynamic

Symbol	Parameter	Test conditions	Min.	Typ.	Max.	Unit
C_{iss}	Input capacitance	V_{DS}= 100 V, f = 1 MHz, V_{GS} = 0 V	-	710	-	pF
C_{oss}	Output capacitance		-	44	-	pF
C_{rss}	Reverse transfer capacitance		-	1.35	-	pF
$C_{oss\ eq.}$ [1]	Equivalent output capacitance	V_{DS} = 0 V to 400 V, V_{GS} = 0 V	-	192	-	pF
R_G	Intrinsic gate resistance	f = 1 MHz, I_D= 0 A	-	5.2	-	Ω
Q_g	Total gate charge	V_{DD} = 400 V, I_D = 13 A, V_{GS} = 0 to 10 V (see Figure 18. Test circuit for gate charge behavior)	-	19.5	-	nC
Q_{gs}	Gate-source charge		-	4	-	nC
Q_{gd}	Gate-drain charge		-	8	-	nC

1. *$C_{oss\ eq.}$ is defined as a constant equivalent capacitance giving the same charging time as Coss when VDS increases from 0 to 80% VDSS.*

Table 6. Switching times

Symbol	Parameter	Test conditions	Min.	Typ.	Max.	Unit
$t_{d(on)}$	Turn-on delay time	V_{DD} = 250 V, I_D = 6.5 A R_G = 4.7 Ω, V_{GS} = 10 V (see Figure 17. Test circuit for resistive load switching times and Figure 22. Switching time waveform)	-	9.6	-	ns
t_r	Rise time		-	7.6	-	ns
$t_{d(off)}$	Turn-off-delay time		-	32	-	ns
t_f	Fall time		-	10	-	ns

Table 7. Source-drain diode

Symbol	Parameter	Test conditions	Min.	Typ.	Max.	Unit
I_{SD}	Source-drain current		-		13	A
I_{SDM} (1)	Source-drain current (pulsed)		-		52	A
V_{SD} (2)	Forward on voltage	V_{GS} = 0 V, I_{SD} = 13 A	-		1.6	V
t_{rr}	Reverse recovery time	I_{SD} = 13 A, di/dt = 100 A/µs, V_{DD} = 60 V (see Figure 19. Test circuit for inductive load switching and diode recovery times)	-	280		ns
Q_{rr}	Reverse recovery charge		-	2.85		µC
I_{RRM}	Reverse recovery current		-	20.5		A
t_{rr}	Reverse recovery time	I_{SD} = 13 A, di/dt = 100 A/µs, V_{DD} = 60 V, T_j = 150 °C (see Figure 19. Test circuit for inductive load switching and diode recovery times)	-	388		ns
Q_{rr}	Reverse recovery charge		-	4.5		µC
I_{RRM}	Reverse recovery current		-	21		A

1. *Pulse width is limited by safe operating area.*
2. *Pulse test: pulse duration = 300 µs, duty cycle 1.5%.*

2.1 Electrical characteristics (curves)

Figure 1. Safe operating area for DPAK

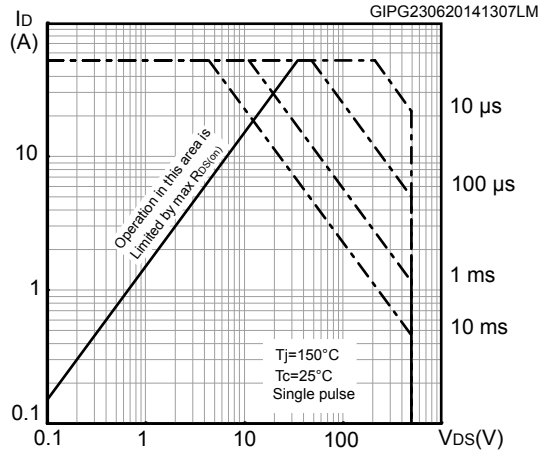

Figure 2. Thermal impedance for DPAK

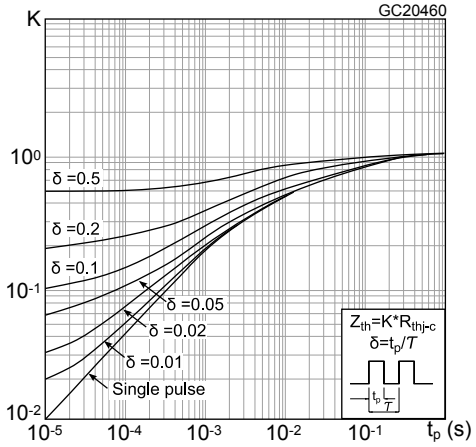

Figure 3. Safe operating area for TO-220FP

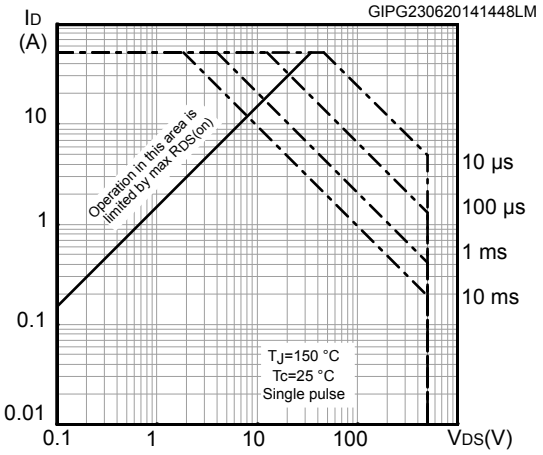

Figure 4. Thermal impedance for TO-220FP

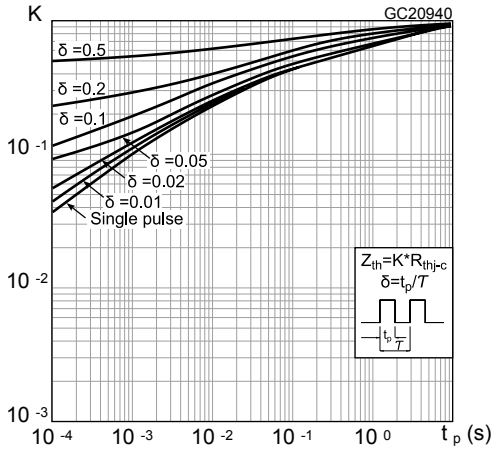

Figure 5. Safe operating area for TO-220

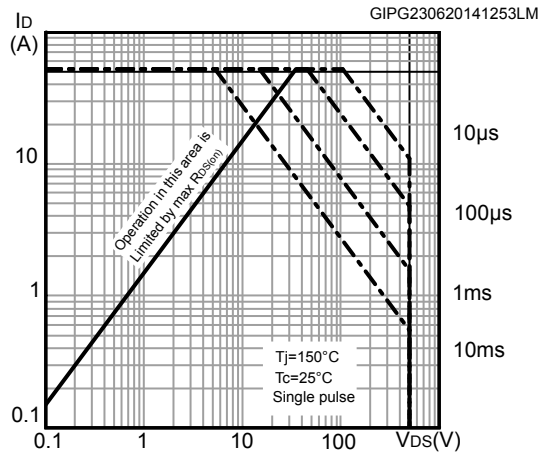

Figure 6. Thermal impedance for TO-220

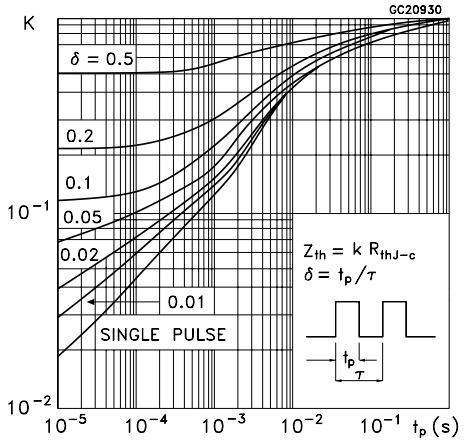

Figure 7. Output characteristics

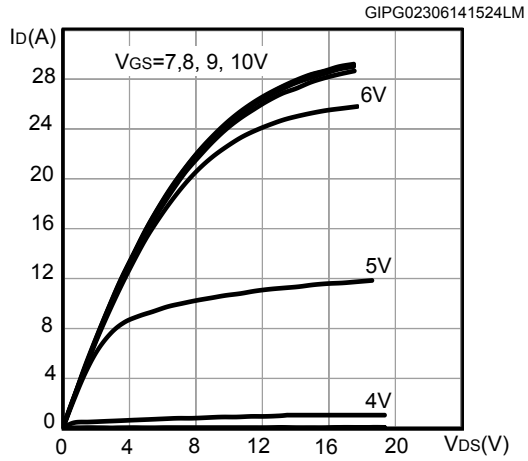

Figure 8. Transfer characteristics

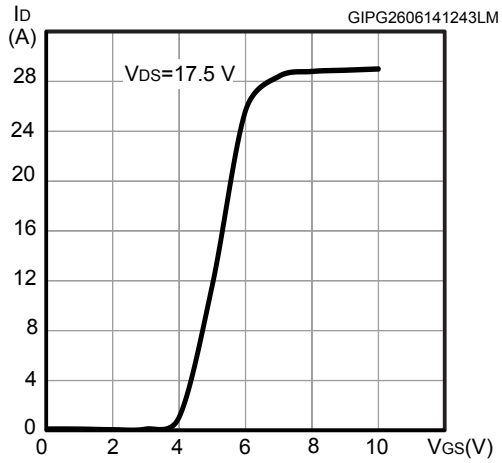

Figure 9. Gate charge vs. gate-source voltage

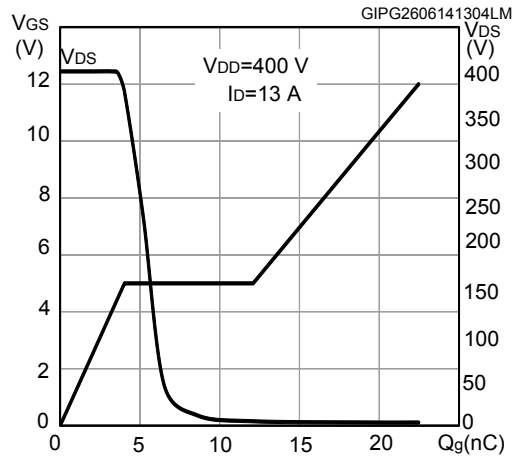

Figure 10. Capacitance variations

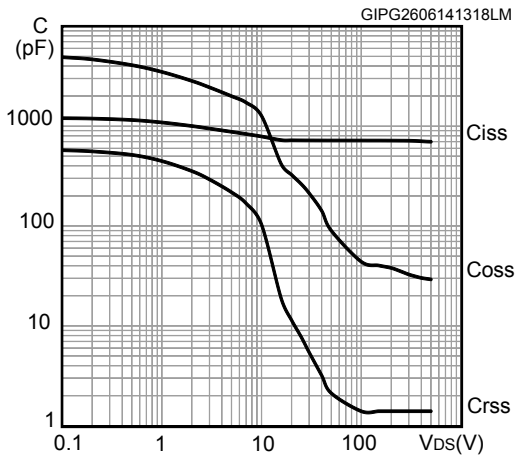

Figure 11. Normalized gate threshold voltage vs. temperature

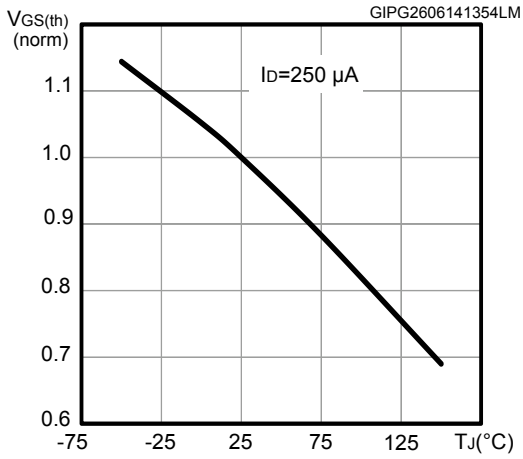

Figure 12. Normalized $V_{(BR)DSS}$ vs. temperature

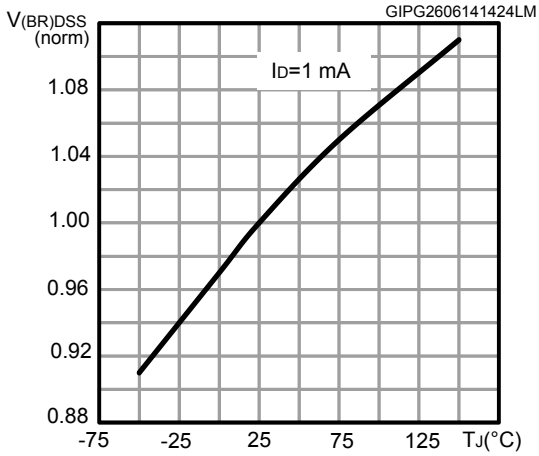

Figure 13. Static drain-source on-resistance

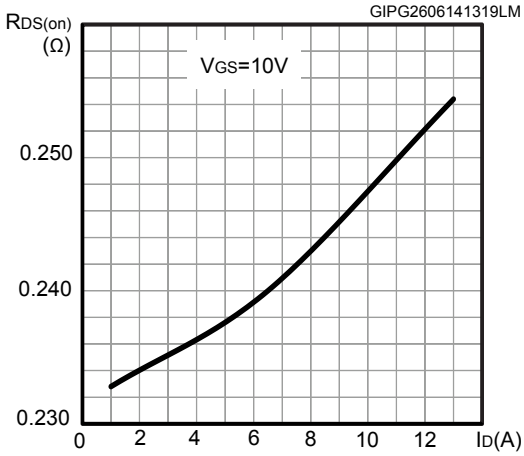

Figure 14. Normalized on-resistance vs. temperature

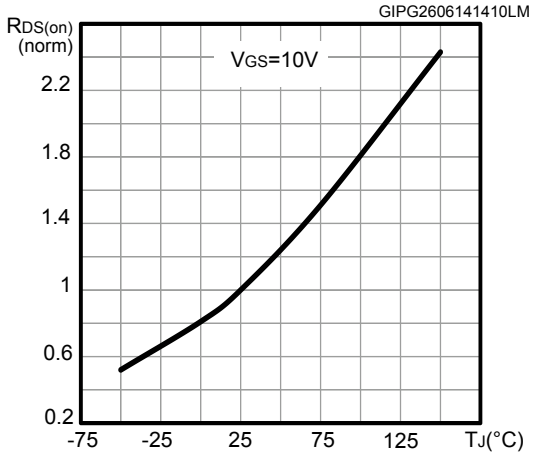

Figure 15. Output capacitance stored energy

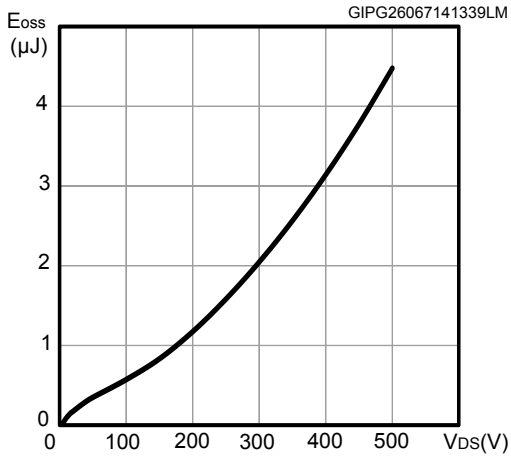

Figure 16. Source- drain diode forward characteristics

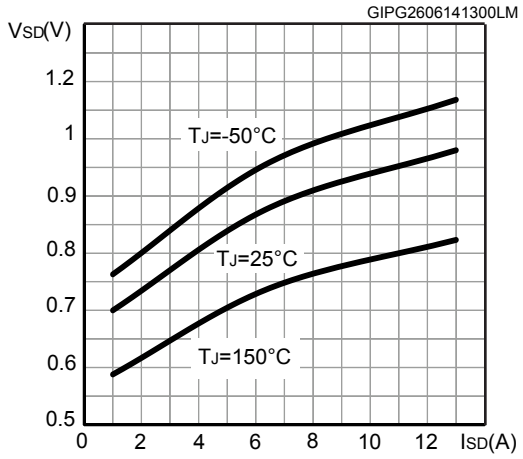

3 Test circuits

Figure 17. Test circuit for resistive load switching times

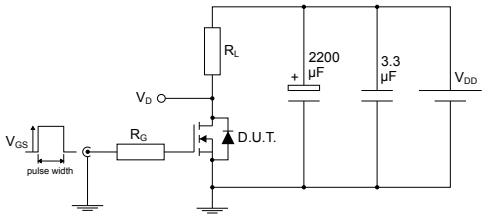

Figure 18. Test circuit for gate charge behavior

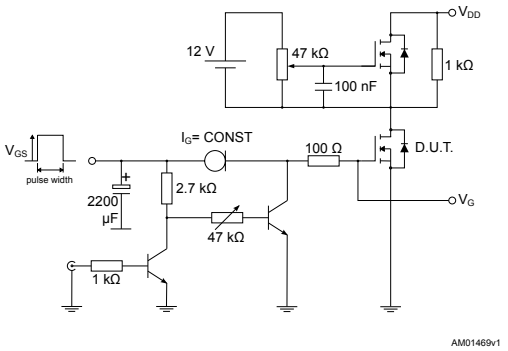

Figure 19. Test circuit for inductive load switching and diode recovery times

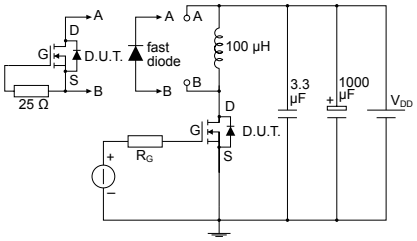

Figure 20. Unclamped inductive load test circuit

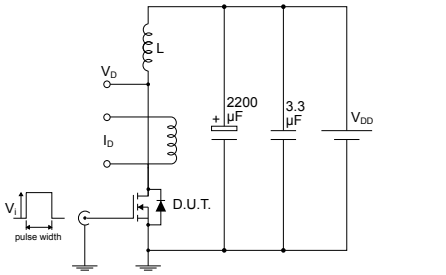

Figure 21. Unclamped inductive waveform

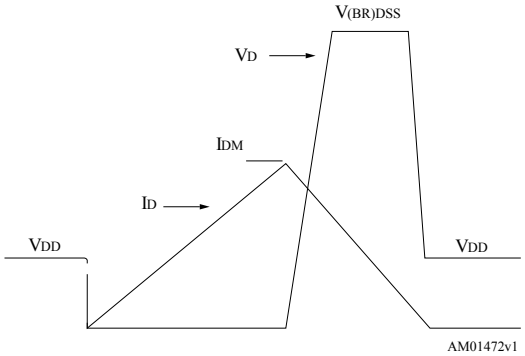

Figure 22. Switching time waveform

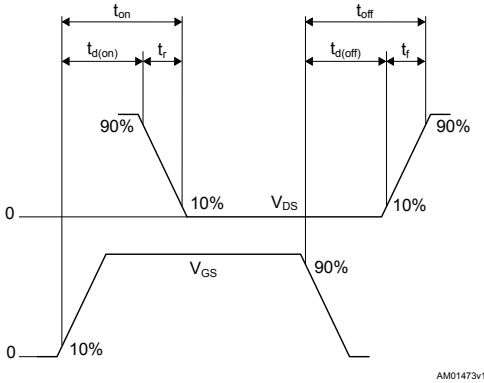

4 Package information

In order to meet environmental requirements, ST offers these devices in different grades of ECOPACK® packages, depending on their level of environmental compliance. ECOPACK® specifications, grade definitions and product status are available at: www.st.com. ECOPACK® is an ST trademark.

4.1 DPAK (TO-252) type A2 package information

Figure 23. DPAK (TO-252) type A2 package outline

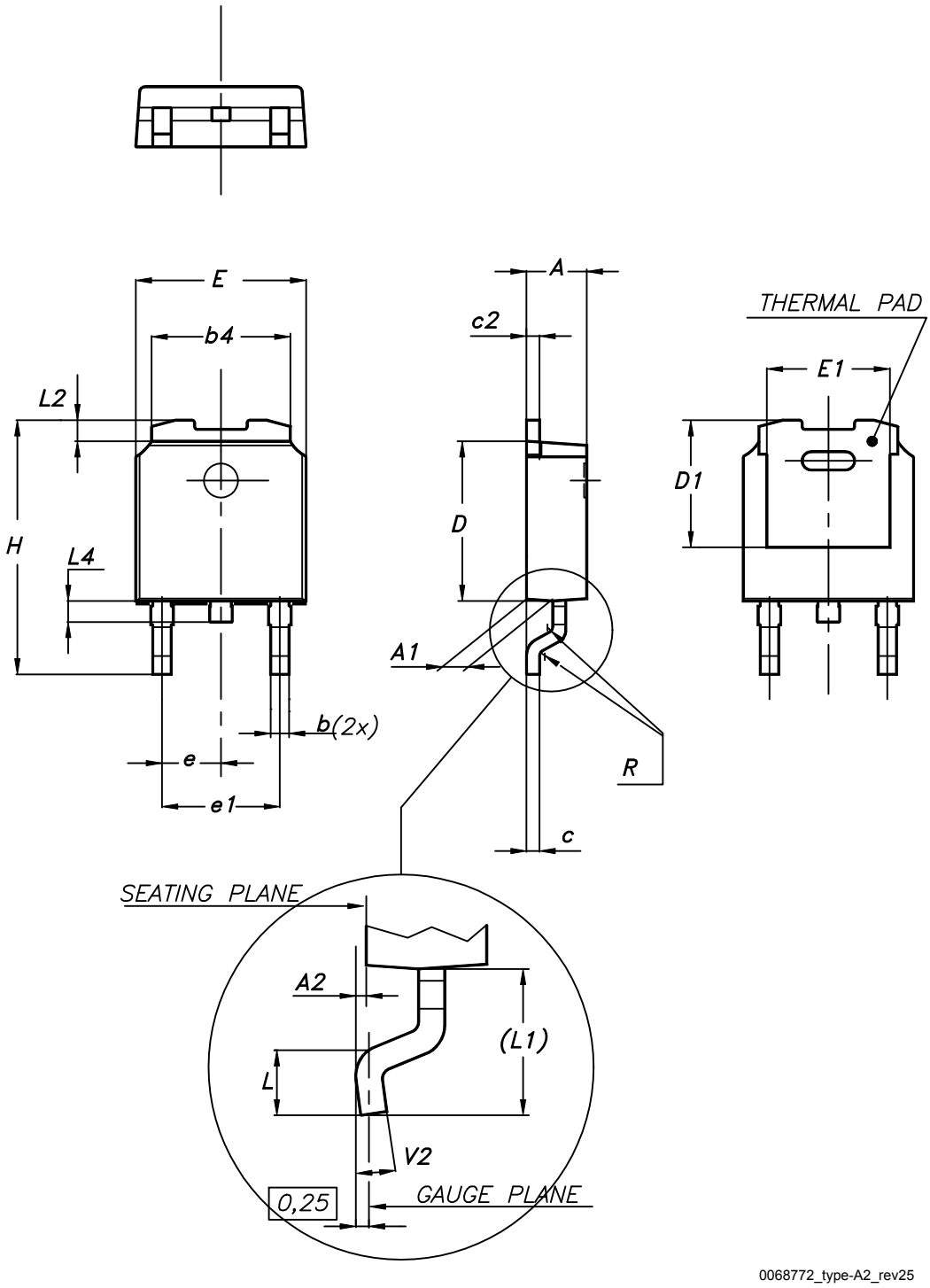

Table 8. **DPAK (TO-252) type A2 mechanical data**

Dim.	mm		
	Min.	Typ.	Max.
A	2.20		2.40
A1	0.90		1.10
A2	0.03		0.23
b	0.64		0.90
b4	5.20		5.40
c	0.45		0.60
c2	0.48		0.60
D	6.00		6.20
D1	4.95	5.10	5.25
E	6.40		6.60
E1	5.10	5.20	5.30
e	2.159	2.286	2.413
e1	4.445	4.572	4.699
H	9.35		10.10
L	1.00		1.50
L1	2.60	2.80	3.00
L2	0.65	0.80	0.95
L4	0.60		1.00
R		0.20	
V2	0°		8°

4.2 DPAK (TO-252) type C2 package information

Figure 24. DPAK (TO-252) type C2 package outline

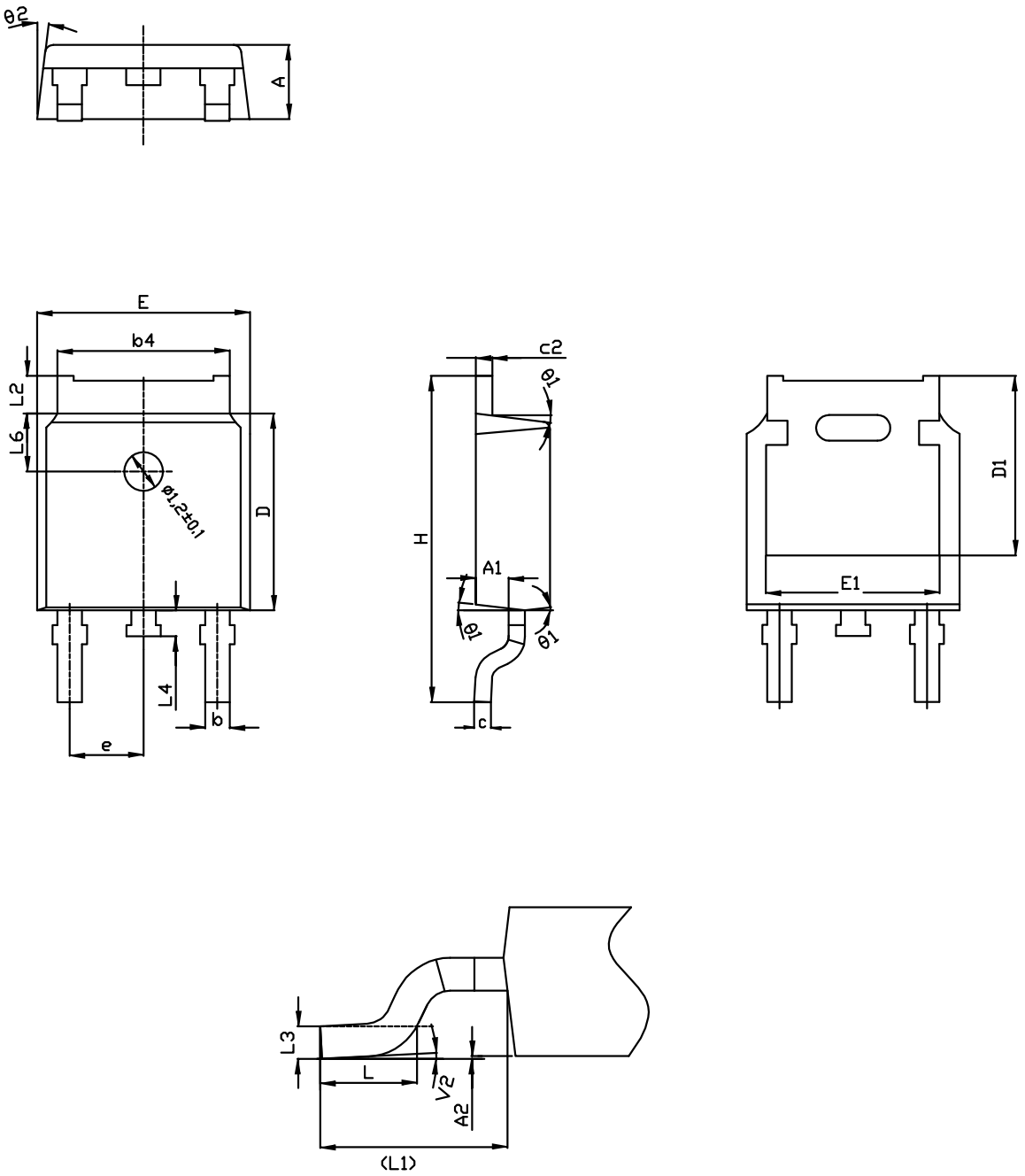

0068772_C2_25

Table 9. DPAK (TO-252) type C2 mechanical data

Dim.	mm		
	Min.	Typ.	Max.
A	2.20	2.30	2.38
A1	0.90	1.01	1.10
A2	0.00		0.10
b	0.72		0.85
b4	5.13	5.33	5.46
c	0.47		0.60
c2	0.47		0.60
D	6.00	6.10	6.20
D1	5.10		5.60
E	6.50	6.60	6.70
E1	5.20		5.50
e	2.186	2.286	2.386
H	9.80	10.10	10.40
L	1.40	1.50	1.70
L1		2.90 REF	
L2	0.90		1.25
L3		0.51 BSC	
L4	0.60	0.80	1.00
L6		1.80 BSC	
θ1	5°	7°	9°
θ2	5°	7°	9°
V2	0°		8°

Figure 25. DPAK (TO-252) recommended footprint (dimensions are in mm)

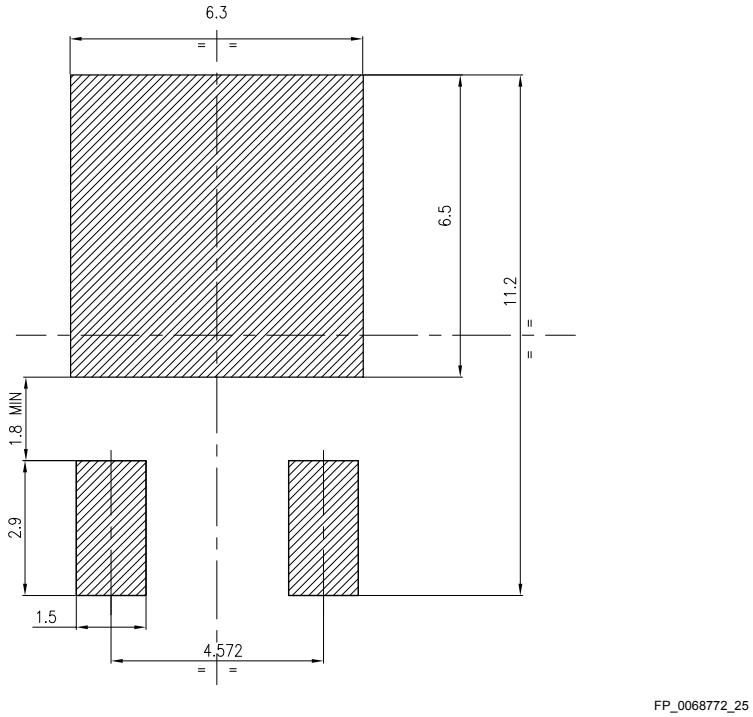

4.3 DPAK (TO-252) packing information

Figure 26. DPAK (TO-252) tape outline

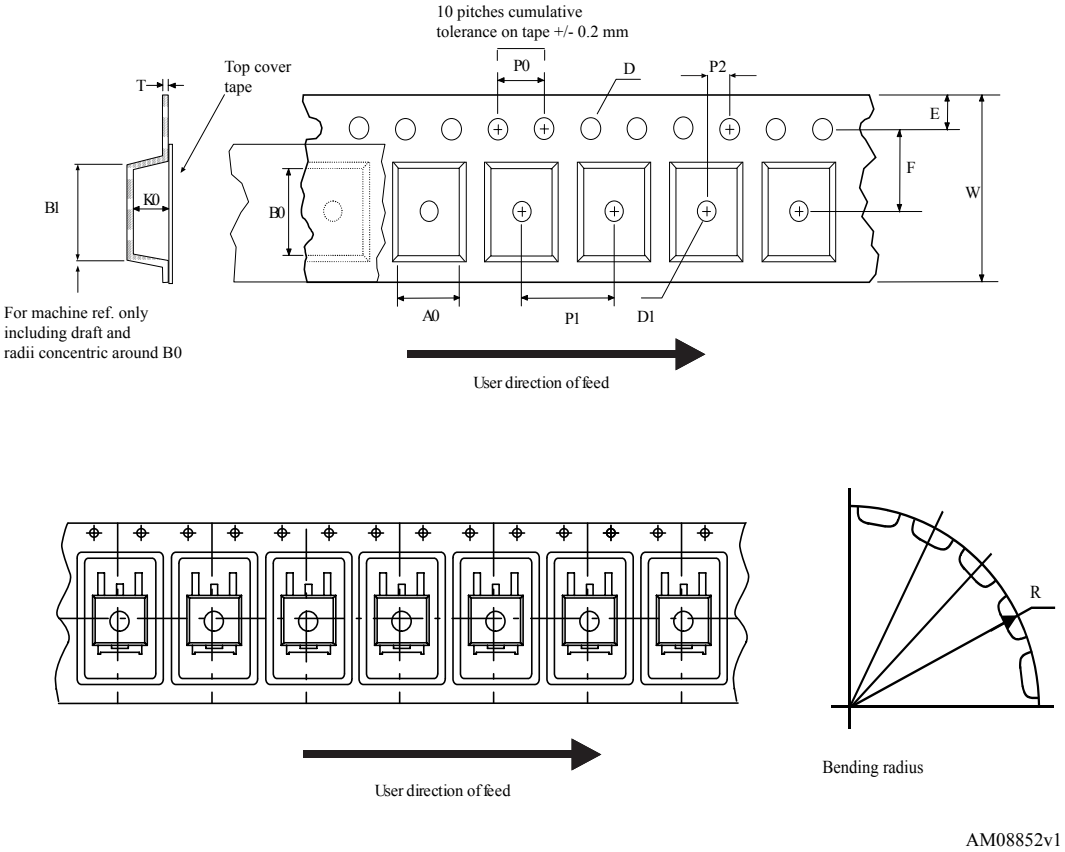

Figure 27. **DPAK (TO-252) reel outline**

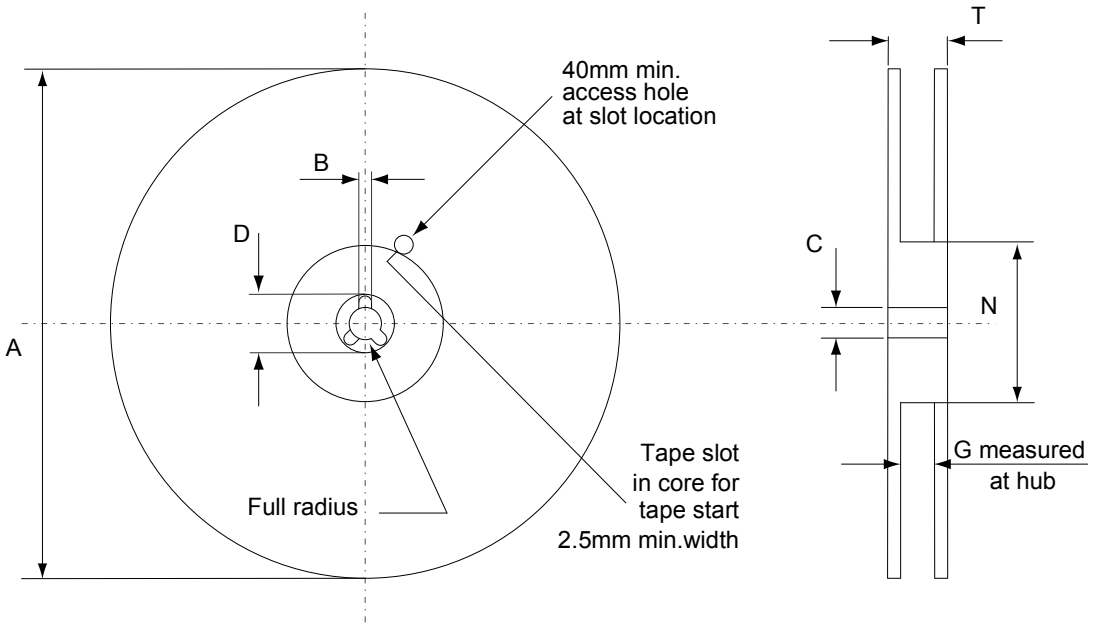

Table 10. **DPAK (TO-252) tape and reel mechanical data**

Tape			Reel		
Dim.	mm		Dim.	mm	
	Min.	Max.		Min.	Max.
A0	6.8	7	A		330
B0	10.4	10.6	B	1.5	
B1		12.1	C	12.8	13.2
D	1.5	1.6	D	20.2	
D1	1.5		G	16.4	18.4
E	1.65	1.85	N	50	
F	7.4	7.6	T		22.4
K0	2.55	2.75			
P0	3.9	4.1	Base qty.		2500
P1	7.9	8.1	Bulk qty.		2500
P2	1.9	2.1			
R	40				
T	0.25	0.35			
W	15.7	16.3			

4.4 TO-220FP package information

Figure 28. TO-220FP package outline

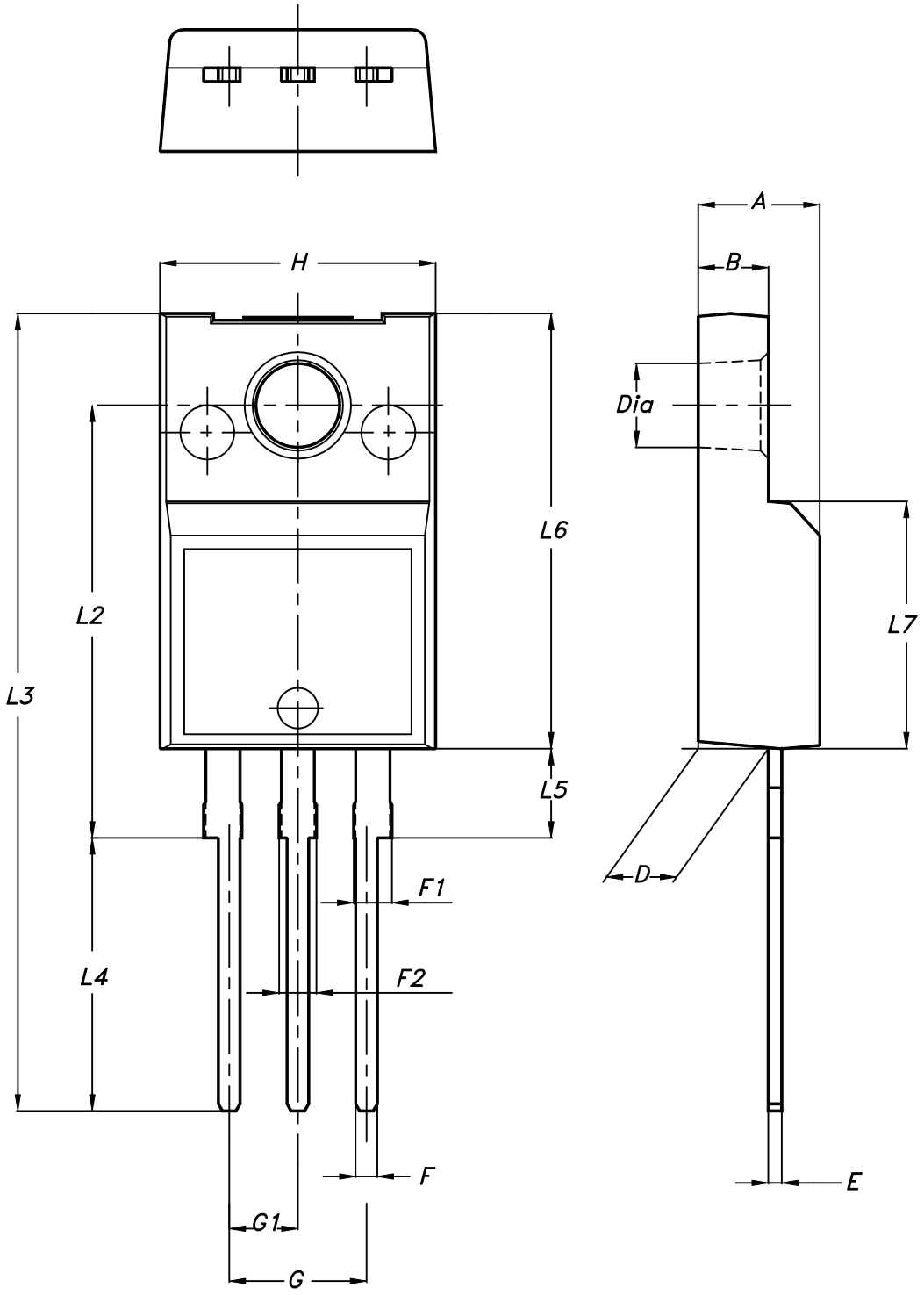

Table 11. **TO-220FP package mechanical data**

Dim.	mm		
	Min.	Typ.	Max.
A	4.4		4.6
B	2.5		2.7
D	2.5		2.75
E	0.45		0.7
F	0.75		1
F1	1.15		1.70
F2	1.15		1.70
G	4.95		5.2
G1	2.4		2.7
H	10		10.4
L2		16	
L3	28.6		30.6
L4	9.8		10.6
L5	2.9		3.6
L6	15.9		16.4
L7	9		9.3
Dia	3		3.2

4.5 TO-220 type A package information

Figure 29. TO-220 type A package outline

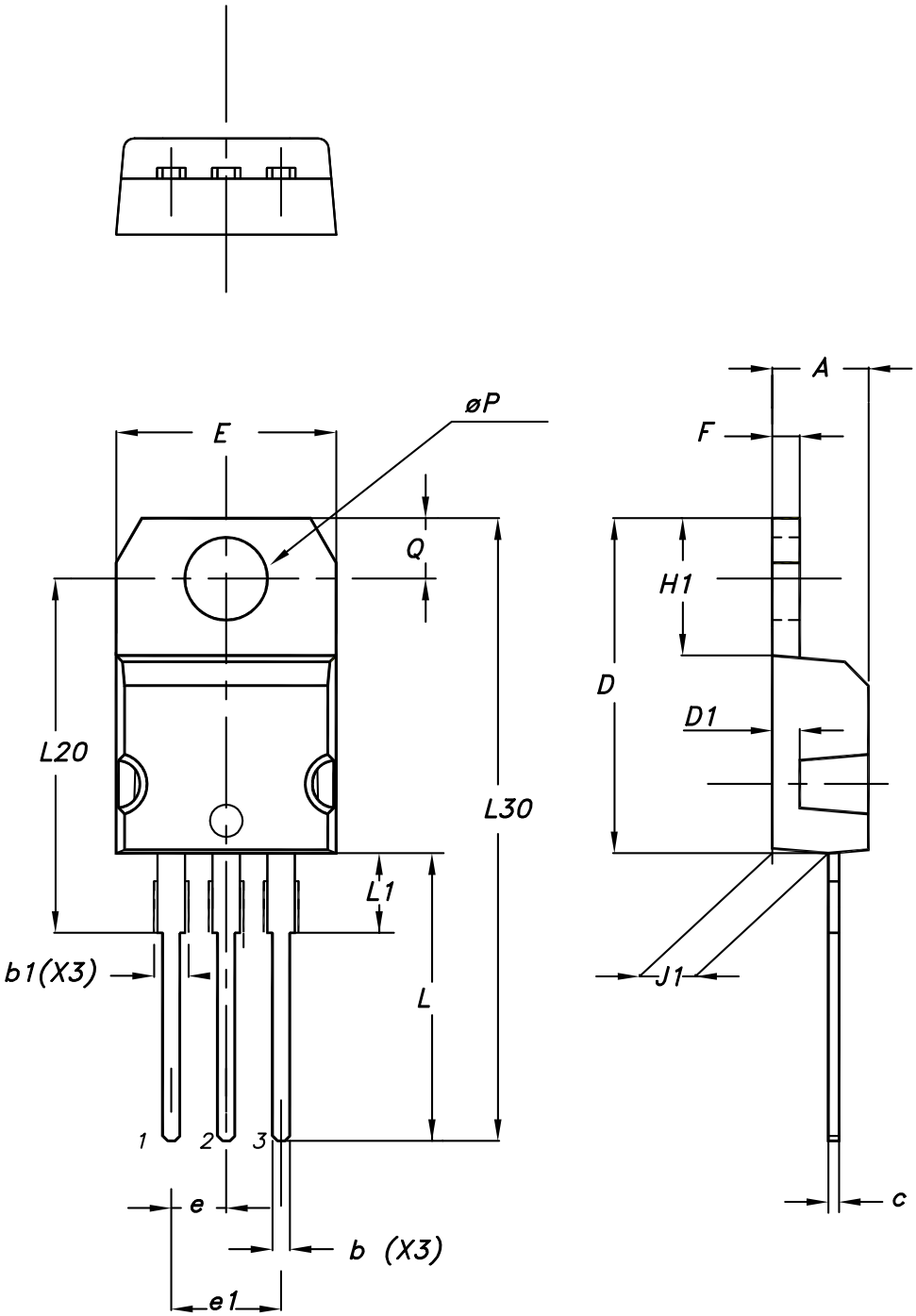

Table 12. **TO-220 type A package mechanical data**

Dim.	mm		
	Min.	Typ.	Max.
A	4.40		4.60
b	0.61		0.88
b1	1.14		1.55
c	0.48		0.70
D	15.25		15.75
D1		1.27	
E	10.00		10.40
e	2.40		2.70
e1	4.95		5.15
F	1.23		1.32
H1	6.20		6.60
J1	2.40		2.72
L	13.00		14.00
L1	3.50		3.93
L20		16.40	
L30		28.90	
øP	3.75		3.85
Q	2.65		2.95

5 Ordering information

Table 13. **Ordering information**

Order code	Marking	Package	Packing
STD16N50M2	16N50M2	DPAK	Tape and reel
STF16N50M2		TO-220FP	Tube
STP16N50M2		TO-220	

Revision history

Table 14. Document revision history

Date	Revision	Changes
04-Jul-2014	1	Initial release.
18-Jul-2014	2	Updated *Figure 9*.
31-Jul-2014	3	Updated *Figure 2* and *Figure 4*.
25-Aug-2016	4	Datasheet promoted from preliminary data to production data Changed: *Section 4.1: "DPAK (TO-252) type A2 package information"* Minor text changes
04-May-2017	5	Updated marking in Table 1: "Device summary". Updated Figure 3: "Thermal impedance for DPAK". Minor text changes
04-Dec-2018	6	Updated Features, Table 1. Absolute maximum ratings, Table 4. On /off states, Table 5. Dynamic. Added Section 4.2 DPAK (TO-252) type C2 package information and Section 5 Ordering information.

Contents

1 **Electrical ratings** 2

2 **Electrical characteristics** 3

2.1 Electrical characteristics (curves) 5

3 **Test circuits** 8

4 **Package information** 9

4.1 DPAK (TO-252) type A2 package information 9

4.2 DPAK (TO-252) type C2 package information 11

4.3 DPAK (TO-252) packing information 14

4.4 TO-220FP package information 16

4.5 TO-220 type A package information 18

5 **Ordering information** 21

Revision history 22

Contents 23

IMPORTANT NOTICE – PLEASE READ CAREFULLY

STMicroelectronics NV and its subsidiaries (“ST”) reserve the right to make changes, corrections, enhancements, modifications, and improvements to ST products and/or to this document at any time without notice. Purchasers should obtain the latest relevant information on ST products before placing orders. ST products are sold pursuant to ST’s terms and conditions of sale in place at the time of order acknowledgement.

Purchasers are solely responsible for the choice, selection, and use of ST products and ST assumes no liability for application assistance or the design of Purchasers’ products.

No license, express or implied, to any intellectual property right is granted by ST herein.

Resale of ST products with provisions different from the information set forth herein shall void any warranty granted by ST for such product.

ST and the ST logo are trademarks of ST. All other product or service names are the property of their respective owners.

Information in this document supersedes and replaces information previously supplied in any prior versions of this document.

© 2018 STMicroelectronics – All rights reserved

Mouser Electronics

Authorized Distributor

Click to View Pricing, Inventory, Delivery & Lifecycle Information:

STMicroelectronics:

STD16N50M2 STF16N50M2 STP16N50M2