Alle Rechte vorbehalten/ *All rights reserved*

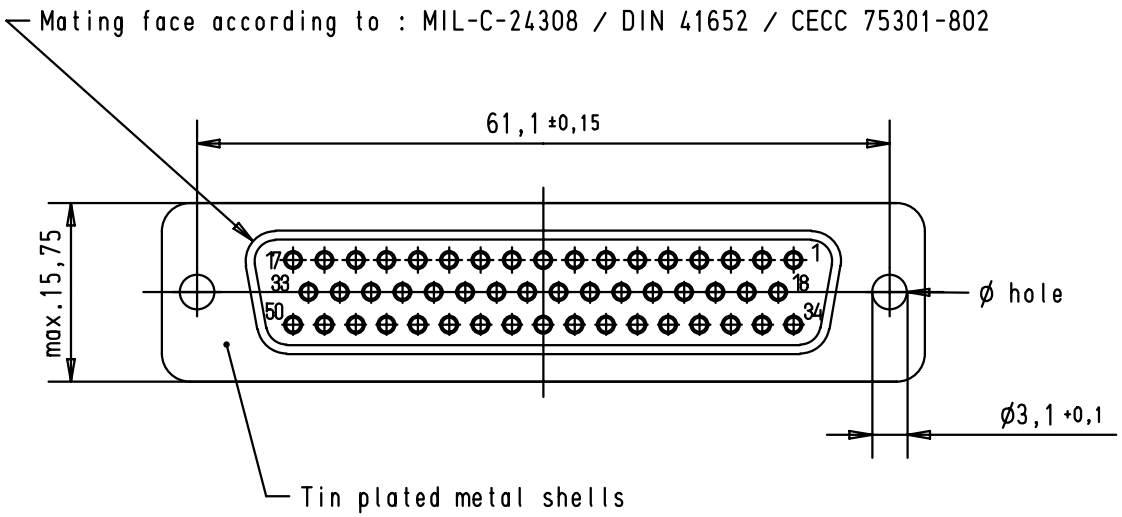

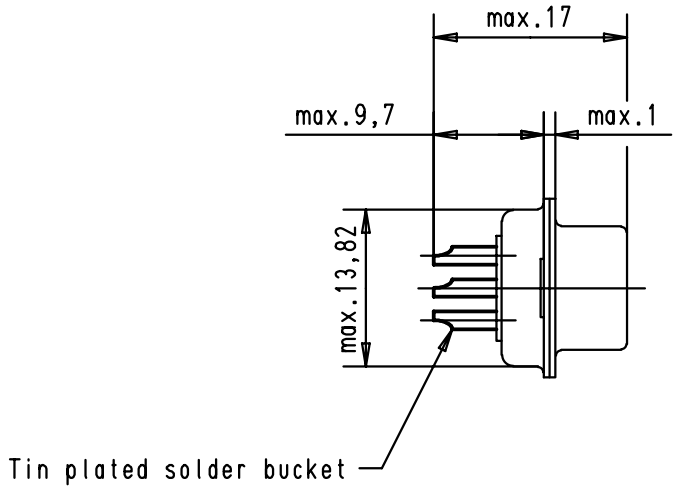

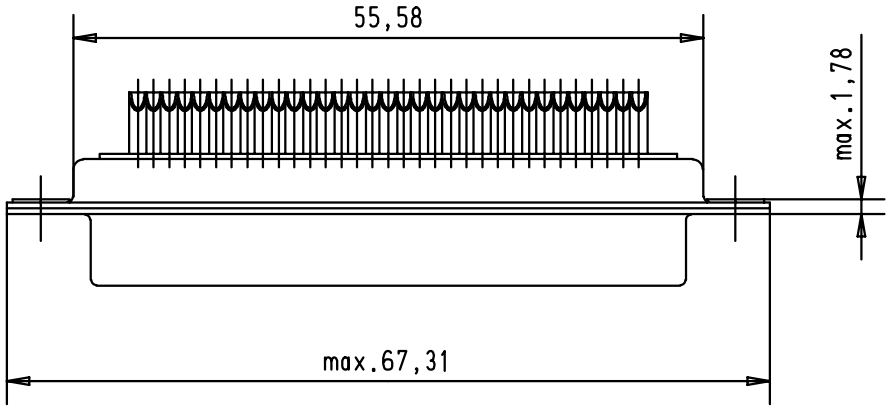

Part number	ø hole	Performance level	Mod.	Dat.	Name
09 67 050 4715.05	$3,1^{+0,1}$	S4			
09 67 050 4715.00	$3,1^{+0,1}$	2			
09 67 050 4704.00	$3,1^{+0,1}$	3	29754	13-MAR-02	CV

	Dat.	Name
Detail.	13-MAR-02	CV
Insp.		
Stand.		

All Dim. in mm
Orig. Size DIN A 4

D-Sub, Female, Straight 50 Poles with turned solder buckets and holes

Maßstab/ *Scale* 1.5:1

HARTING EURL
F-95972 Paris

TB 096705047xx

Sub.

Blatt/ *Page* 1