SPECIFICATION

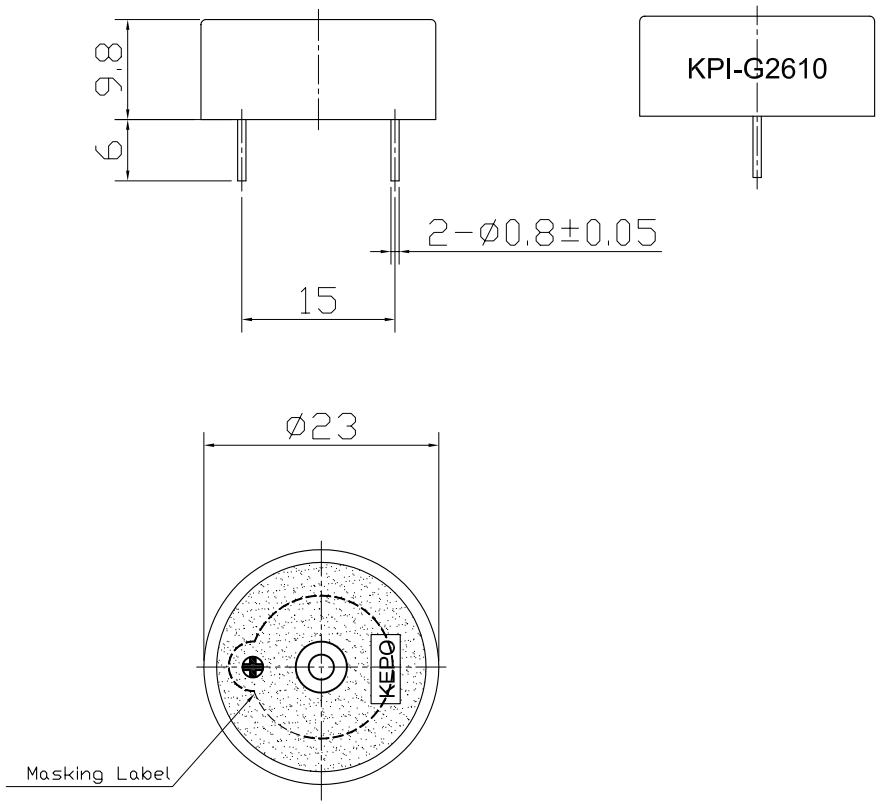

1.Rated Voltage 12VDC
2.Operating Voltage .....3~24VDC
3.Max.Rated Current .....10mA at 12VDC
4.Resonant Frequency .....3.5±0.5KHz
5.Min.Sound Pressure Level.....85dB at 12VDC/30cm
6.Tone Nature .....Continuous
7.Case Material /Color.....PC/Black
8.Operating Temperature .....-20～+80℃
9.Store Temperature .....-30～+100℃
10.Weight 4g

Compliance with ROHS

No.	DESCRIPTION	APPROVED	DATE

TOLERANCES UNLESS NOTED OTHERWISE
.X ±
.XX ±
.XXX ±
90° FORMED ANGLES +2° -1°
FIRST ANGLE PROJECTION

APPROVALS		DATE
DRAWN		
CHECKED	水成锋	
APPROVED	梁树棠	10.10.08

KEPO NINGBO KEPO ELECTRONIC CO.,LTD
http://www.chinaacoustic.com

Piezo Buzzer QUARTZ-1 LTD
KPI-G2610-1918

UNIT	DWG NO.		
mm	OEM1918R		
SCALE NOT TO SCALE	SHEET	VER 1.0	