380-007
EMI/RFI Non-Environmental Backshell
Light-Duty with Strain Relief
Type C - Rotatable Coupling - Split Shell

CONNECTOR DESIGNATORS

A-F-H-L-S

ROTATABLE COUPLING

TYPE C OVERALL SHIELD TERMINATION

380 F D 007 M 16 05 L

- Product Series
- Connector Designator
- Angle and Profile
  - C = Ultra-Low Split 90°
  - D = Split 90°
  - F = Split 45°
- Basic Part No.
- Finish (Table II)
- Shell Size (Table I)
- Cable Entry (Tables IV, V)
- Strain Relief Style (L, G)

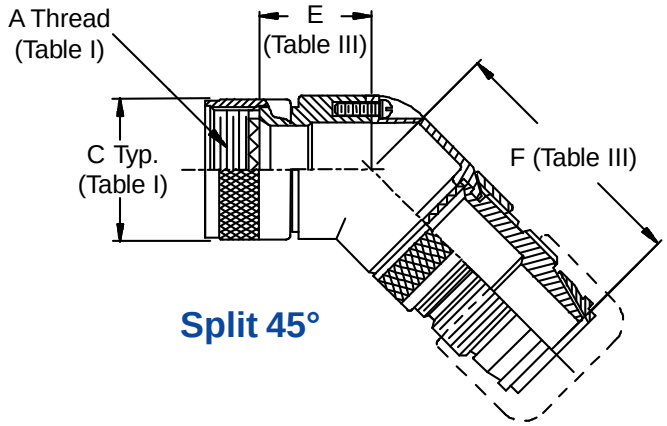

Split 45°

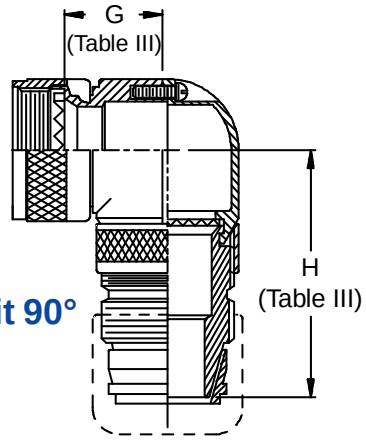

Split 90°

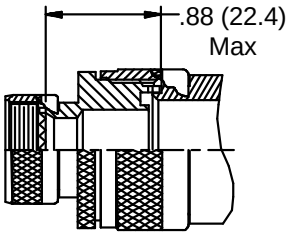

STYLE 2
(See Note 1)

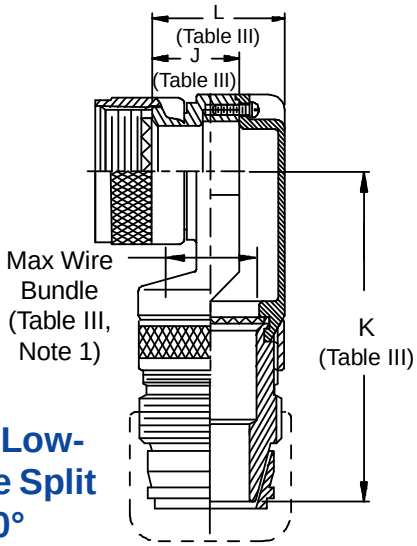

Ultra Low-Profile Split 90°

STYLE L
Light Duty
(Table IV)

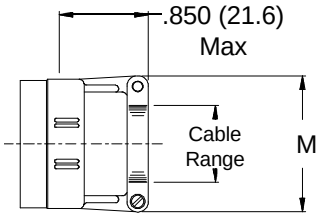

STYLE G
Light Duty
(Table V)

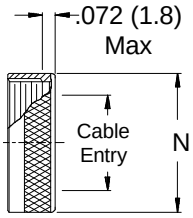

© 2005 Glenair, Inc. CAGE Code 06324 Printed in U.S.A.

Downloaded from Arrow.com.

380-007
EMI/RFI Non-Environmental Backshell
Light-Duty with Strain Relief
Type C - Rotatable Coupling - Split Shell

See inside back cover fold-out or pages 13 and 14 for unabridged Tables I and II.

TABLE III: DIMENSIONS

Shell Size	E Max	F Max	G Max	H Max	J Max	K Max	L Max	Function C Max Wire Bundle
08/09	.440 (11.2)	1.782 (45.3)	.680 (17.3)	1.722 (43.7)	.340 (8.6)	2.062 (52.4)	.681 (17.3)	.250 (6.4)
10/11	.500 (12.7)	1.845 (46.9)	.750 (19.1)	1.785 (45.3)	.270 (6.9)	2.225 (56.5)	.731 (18.6)	.375 (9.5)
12/13	.560 (14.2)	1.908 (48.5)	.810 (20.6)	1.848 (46.9)	.270 (6.9)	2.218 (56.3)	.731 (18.6)	.375 (9.5)
14/15	.620 (15.7)	1.935 (49.1)	.870 (22.1)	1.875 (47.6)	.280 (7.1)	2.285 (58.0)	.831 (21.1)	.500 (12.7)
16/17	.680 (17.3)	2.040 (51.8)	.930 (23.6)	1.980 (50.3)	.420 (10.7)	2.340 (59.4)	.981 (24.9)	.625 (15.9)
18/19	.750 (19.1)	2.095 (53.2)	1.000 (25.4)	2.035 (51.7)	.640 (16.3)	2.365 (60.1)	1.181 (30.0)	.625 (15.9)
20/21	.820 (20.8)	2.160 (54.9)	1.060 (26.9)	2.100 (53.3)	.640 (16.3)	2.370 (60.2)	1.181 (30.0)	.625 (15.9)
22/23	.880 (22.4)	2.220 (56.4)	1.120 (28.4)	2.160 (54.9)	.540 (13.7)	2.520 (64.0)	1.181 (30.0)	.750 (19.1)
24/25	.940 (23.9)	2.280 (57.9)	1.180 (30.0)	2.220 (56.4)	.540 (13.7)	2.360 (59.9)	1.181 (30.0)	.750 (19.1)

TABLE II: STANDARD FINISHES

GLENAIR SYMBOL	FINISH
B	Cadmium Plate, Olive Drab
M	Electroless Nickel
NF	Cadmium Plate, Olive Drab Over Electroless Nickel

See Inside Back Cover for Additional Finish Options

TABLE IV: CABLE ENTRY

Dash No.	M Max	Cable Range Min	Cable Range Max
01	.781 (19.8)	.062 (1.6)	.125 (3.2)
02	.968 (24.6)	.125 (3.2)	.250 (6.4)
03	1.046 (26.6)	.250 (6.4)	.375 (9.5)
04	1.156 (29.4)	.250 (6.4)	.500 (12.7)
05	1.218 (30.9)	.375 (9.5)	.625 (15.9)
06	1.343 (34.1)	.500 (12.7)	.750 (19.1)
07	1.468 (37.3)	.625 (15.9)	.875 (22.2)
08	1.593 (40.5)	.625 (15.9)	1.000 (25.4)
09	1.718 (43.6)	.750 (19.1)	1.125 (28.6)
10	1.843 (46.8)	.875 (22.2)	1.250 (31.8)

TABLE V: CABLE ENTRY

Dash No.	N Max	Cable Entry Max
01	.593 (15.1)	.125 (3.2)
02	.718 (18.2)	.250 (6.4)
03	.843 (21.4)	.375 (9.5)
04	.968 (24.6)	.500 (12.7)
05	1.109 (28.2)	.625 (15.9)
06	1.218 (30.9)	.750 (19.1)
07	1.343 (34.1)	.875 (22.2)
08	1.468 (37.3)	1.000 (25.4)
09	1.593 (40.5)	1.125 (28.6)
10	1.718 (43.6)	1.250 (31.8)

1. When maximum cable entry (page 21) is exceeded, Style 2 will be supplied (not available in Function C). Dimensions E, F, G and H will not apply. Please consult factory.
2. Metric dimensions (mm) are indicated in parentheses.
3. Cable range is defined as the accommodations range for the wire bundle or cable. Dimensions shown are not intended for inspection criteria.
4. Angular function "C", low-profile split elbow, not available with "S" connector designator.

© 2005 Glenair, Inc. CAGE Code 06324 Printed in U.S.A.

Downloaded from Arrow.com.