Data sheet

Electronic timer CT-ARS.21

OFF-delayed without auxiliary voltage with 2 c/o (SPDT) contacts

The CT-ARS.21 is an electronic timer from the CT-S range with true OFF-delay. It provides 7 time ranges and a continuous rated control voltage that enables worldwide use regardless of the supply voltage.

All electronic timers from the CT-S range are available with two different terminal versions. You can choose between the proven screw connection technology (double-chamber cage connection terminals) and the completely tool-free Easy Connect Technology (push-in terminals).

2CDC 251 035 V0011

Characteristics

- Rated control supply voltage 24-240 V AC/DC
- OFF-delay timer without auxiliary voltage
- 7 time ranges (0.05 s - 10 min)
- Precise adjustment by front-face operating elements
- Screw connection technology or Easy Connect Technology available
- Enclosure material for highest fire protection classification
- Tool-free mounting and demounting on DIN-rail
- 2 c/o (SPDT) contacts
- 22.5 mm (0.89 in) width
- 1 LED for status indication

Approvals

	UL 508, CAN/CSA C22.2 No.14	
	GL	pending
	GOST	
	CB scheme	
	CCC	

Marks

- CE
- C-Tick

Order data

Electronic timer

Type	Rated control supply voltage	Connection technology	Time ranges	Order code
CT-ARS.21P	24-240 V AC/DC	Push-in terminals	0.05 s - 10 min	1SVR 740 120 R3300
CT-ARS.21S	24-240 V AC/DC	Screw type terminals	0.05 s - 10 min	1SVR 730 120 R3300

Accessories

Type	Description	Order code
ADP.01	Adapter for screw mounting on panel	1SVR 430 029 R0100
MAR.01	Marker label for devices without DIP switches	1SVR 366 017 R0100
COV.11	Sealable transparent cover	1SVR 600 805 P0000

Connection technology

Maintenance free Easy Connect Technology with push-in terminals

Type designation CT-xxS.yyP

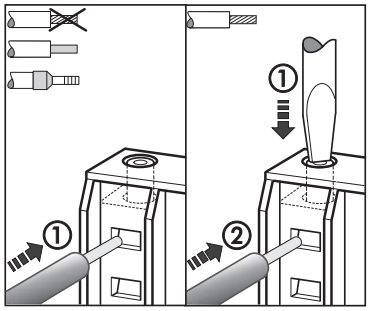

Push-in terminals

- Tool-free connection of rigid and flexible wires with wire end ferrule
  Wire size: 2 x 0.5-1.5 mm²
- Easy connection of flexible wires without wire end ferrule by opening the terminals
- Opening for testing the electrical contacting
- Gas-tight

Approved screw connection technology with double-chamber cage connection terminals

Type designation CT-xxS.yyS

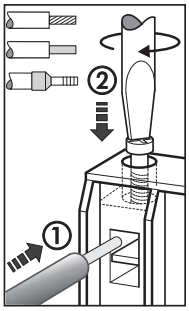

Double-chamber cage connection terminals

- Terminal spaces for different wire sizes:
  fine-strand with/without wire end ferrule:
  1 x 0.5-2.5 mm², 2 x 0.5-1.5 mm²
  rigid: 1 x 0.5-4 mm², 2 x 0.5-2.5 mm²
- Pozidrive screws for pan- or crosshead screwdrivers

Both the Easy Connect Technology with push-in terminals and screw connection technology with double-chamber cage connection terminals have the same connection geometry as well as terminal position.

Functions

Operating control

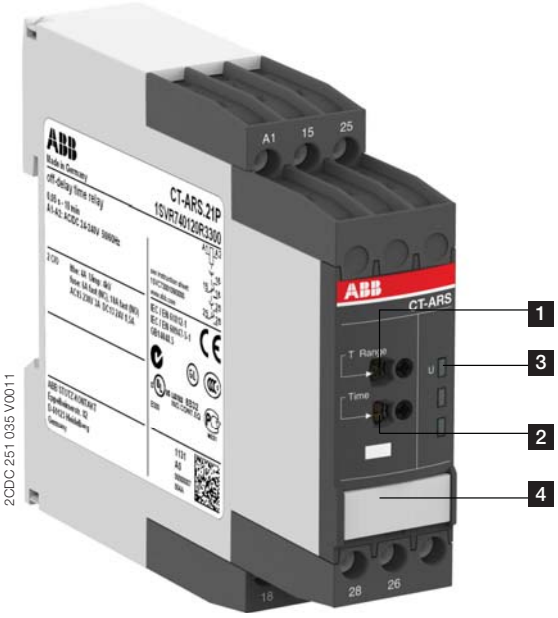

1 **Rotary switch for the preselection of the time range**

2 **Fine adjustment of the time delay**

3 **Indication of operational states**

U: green LED - control supply voltage

4 **Marker label**

Application

The CT-S range timers are designed for use in industrial applications. They operate over an universal range of supply voltages and a large time delay range, within compact dimensions. The easy-to-set front-face potentiometers, with direct reading scales, provide accurate time delay adjustment.

Operating mode

The CT-ARS.21 with 2 c/o contacts offers 7 time ranges, from 0.05 s to 10 min, for the adjustment of the time delay. The time delay range is rotary switch selectable. The fine adjustment of the time delay is made via an internal potentiometer, with a direct reading scale, on the front of the unit.

Function diagram

OFF-delay without auxiliary voltage

The OFF-delay function without auxiliary voltage does not require continuous control supply voltage for timing. Prior to first commissioning and after a six-month stop in operation, a formatting time of 5 minutes is necessary.

Applying control supply voltage energizes the output relay immediately. Applied control supply voltage is displayed by the glowing green LED. If control supply voltage is interrupted, the OFF-delay starts and the LED turns off. When timing is complete, the output relay de-energizes.

For correct operation of the unit, it is necessary to complete the minimum energizing time.

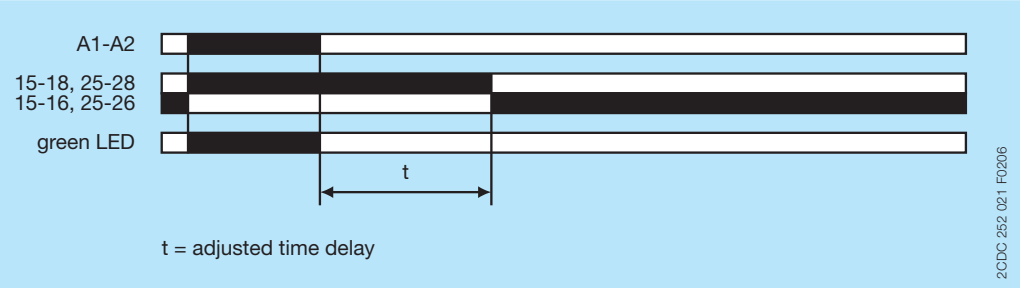

Electrical connection

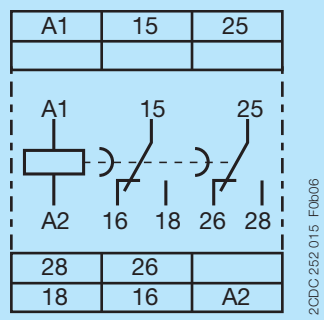

15-16/18	1 c/o (SPDT) contact
25-26/28	2. c/o (SPDT) contact
A1-A2	Rated control supply voltage U_S 24-240 V AC/DC

Connection diagram

Technical data

Data at T_a = 25 °C and rated values, unless otherwise indicated

Input circuits

Supply circuit		**A1-A2**
Rated control supply voltage U_S		24-240 V AC/DC
Rated control supply voltage U_S tolerance		-15...+10 %
Rated frequency	DC	n/a
	AC	50/60 Hz
Frequency range	AC	47-63 Hz
Typical current / power consumption	24 V DC	1 mA / -
	115 V AC	2.5 mA / -
	230 V AC	3.1 mA / -
Formatting time (prior to 1st commissioning and after a six-month stop in operation)		5 min
Minimum duty time		100 ms

Timing circuit		
Kind of timer	Single-function timer	OFF-delay without auxiliary voltage
Time ranges 0.05 s - 10 min		0.05-1 s, 0.15-3 s, 0.5-10 s, 1.5-30 s, 5-100 s, 15-300 s, 0.5-10 min
Recovery time		< 50 ms
Repeat accuracy (constant parameters)		Δt <± 0.2 %
Accuracy within the rated control supply voltage tolerance		Δt < 0.004 %/V
Accuracy within the temperature range		Δt < 0.03 %/°C

User interface

Indication of operational states		
Control supply voltage	U: green LED	⎍: control supply voltage applied

Output circuits

Kind of output	15-16/18	Relay, 1 c/o (SPDT) contact
	25-26/28	Relay, 2. c/o (SPDT) contacts
Contact material		Cd-free
Rated operational voltage U_e		250 V
Minimum switching voltage / Minimum switching current		12 V / 10 mA
Maximum switching voltage / Minimum switching current		see 'Load limit curves' on page 8
Rated operational current I_e (IEC/EN 60947-5-1)	AC12 (resistive) at 230 V	4 A
	AC15 (inductive) at 230 V	3 A
	DC12 (resistive) at 24 V	4 A
	DC13 (inductive) at 24 V	1.5 A
AC rating (UL 508)	utilization category (Control Circuit Rating Code)	B 300
	max. rated operational voltage	300 V AC
	max. continuous thermal current at B 300	5 A
	max. making / breaking apparent power at B 300	3600/360 VA
Mechanical lifetime		30 x 10^6 switching cycles
Electrical lifetime	AC12, 230 V, 4 A	0.1 x 10^6 switching cycles
Maximum fuse rating to achieve short-circuit protection (IEC/EN 60947-5-1)	n/c contact	6 A fast-acting
	n/o contact	10 A fast-acting

General data

MTBF		on request
Duty time		100 %
Dimensions (W x H x D)	product dimensions	22.5 x 85.6 x 103.7 mm (0.89 x 3.37 x 4.08 in)
	packaging dimensions	97 x 109 x 30 mm (3.82 x 4.29 x 1.18 in)
Weight	net weight	
	gross weight	
Mounting		DIN rail (IEC/EN 60715), snap-on mounting without any tool
Mounting position		any
Minimum distance to other units	vertical	not necessary
	horizontal	not necessary
Degree of protection	enclosure	IP50
	terminals	IP20

Electrical connection

		Screw connection technology	**Easy Connect Technology (Push-in)**
Wire size	fine-strand with wire end ferrule	1 x 0.5-2.5 mm² (1 x 20-14 AWG) 2 x 0.5-1.5 mm² (2 x 20-16 AWG)	2 x 0.5-1.5 mm² (2 x 20-16 AWG)
	fine-strand without wire end ferrule	1 x 0.5-2.5 mm² (1 x 20-14 AWG) 2 x 0.5-1.5 mm² (2 x 20-16 AWG)	2 x 0.5-1.5 mm² (2 x 20-16 AWG)
	rigid	1 x 0.5-4 mm² (1 x 20-12 AWG) 2 x 0.5-2.5 mm² (2 x 20-14 AWG)	2 x 0.5-1.5 mm² (2 x 20-16 AWG)
Stripping length		8 mm (0.32 in)	
Tightening torque		0.6 - 0.8 Nm (5.31 - 7.08 lb.in)	-

Environmental data

Ambient temperature ranges	operation	-25...+60 °C
	storage	-40...+85 °C
Damp heat, cyclic (IEC/EN 60068-2-30)		6 x 24 h cycle, 55 °C, 95 % RH
Vibration, sinusoidal (IEC/EN 60068-2-6)	functioning	40 m/s², 10-58/60-150 Hz
	resistance	60 m/s², 10-58/60-150 Hz, 20 cycles
Vibration, seismic (IEC/EN 60068-3-3)	functioning	20 m/s²
Shock, half-sine (IEC/EN 60068-2-27)	functioning	100 m/s², 11 ms, 3 shocks/direction
	resistance	300 m/s², 11 ms, 3 shocks/direction

Isolation data

Rated insulation voltage U_i	output circuit 1 / output circuit 2	300 V
	input circuit / output circuit	500 V
Rated impulse withstand voltage U_{imp} between all isolated circuits (IEC/EN 60664-1, VDE 0110)		4 kV; 1.2/50 µs
Power-frequency withstand voltage test between all isolated circuits (test voltage)		routine test: 2.0 kV; 50 Hz, 1 s type test: 2.5 kV; 50 Hz, 1 min
Basic insulation (IEC/EN 61140)	input circuit / output circuit	500 V
Protective separation (IEC/EN 61140; IEC/EN 50178; VDE 0106 part 101 and part 101/A1)	input circuit / output circuit	250 V
Pollution degree (IEC/EN 60664-1, VDE 0110)		3
Overvoltage category (IEC/EN 60664-1, VDE 0110)		III

Standards

Product standard	IEC 61812-1, EN 61812-1 + A11, DIN VDE 0435 part 2021
Low Voltage Directive	2006/95/EC
EMC Directive	2004/108/EC
RoHS Directive	2002/95/EC

Electromagnetic compatibility

Interference immunity to		IEC/EN 61000-6-1, IEC/EN 61000-6-2
electrostatic discharge	IEC/EN 61000-4-2	Level 3, 6 kV / 8 kV
radiated, radio-frequency, electromagnetic field	IEC/EN 61000-4-3	Level 3, 10 V/m (1 GHz) / 3 V/m (2 GHz) / 1 V/m (2.7 GHz)
electrical fast transient / burst	IEC/EN 61000-4-4	Level 3, 2 kV / 5 kHz
surge	IEC/EN 61000-4-5	Level 4, 2 kV A1-A2
conducted disturbances, induced by radio-frequency fields	IEC/EN 61000-4-6	Level 3, 10 V
harmonics and interharmonics	IEC/EN 61000-4-13	Level 3
Interference emission		IEC/EN 61000-6-3, IEC/EN 61000-6-4
high-frequency radiated	IEC/CISPR 22, EN 55022	Class B
high-frequency conducted	IEC/CISPR 22, EN 55022	Class B

Technical diagrams

Load limit curves

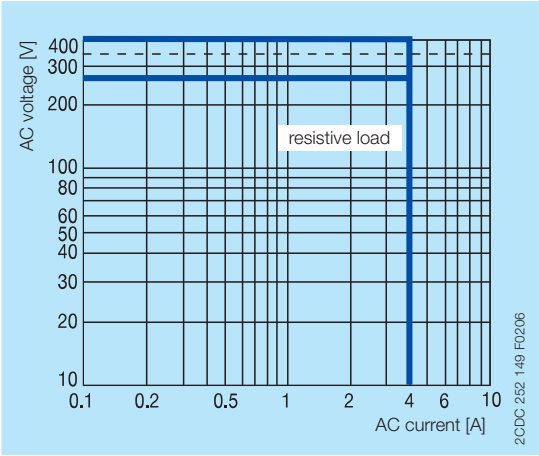

AC load (resistive)

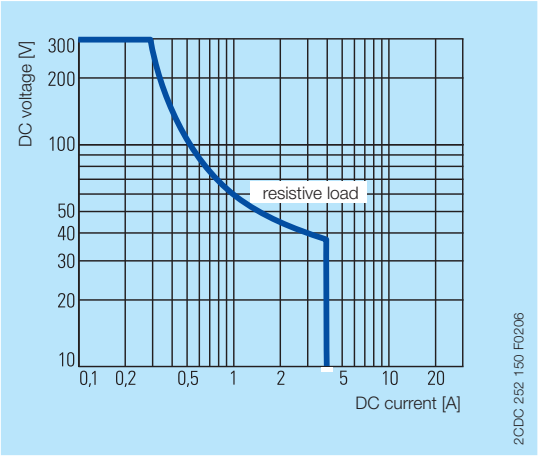

DC load (resistive)

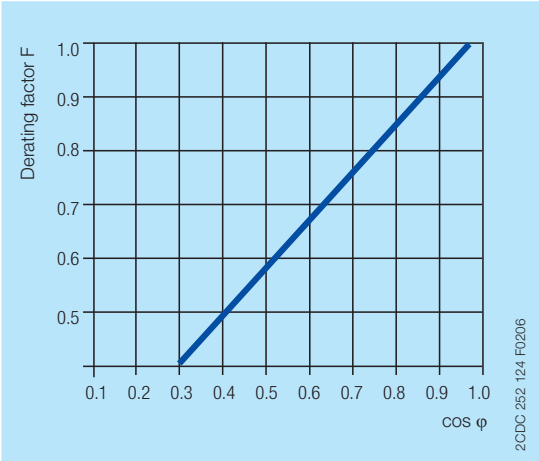

Derating factor F for inductive AC load

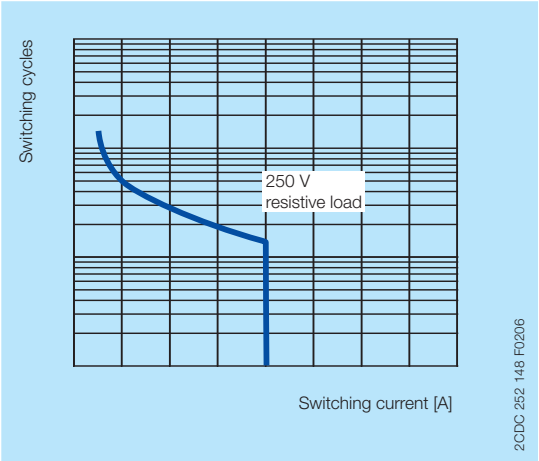

Contact lifetime

Dimensions

in **mm** and *inches*

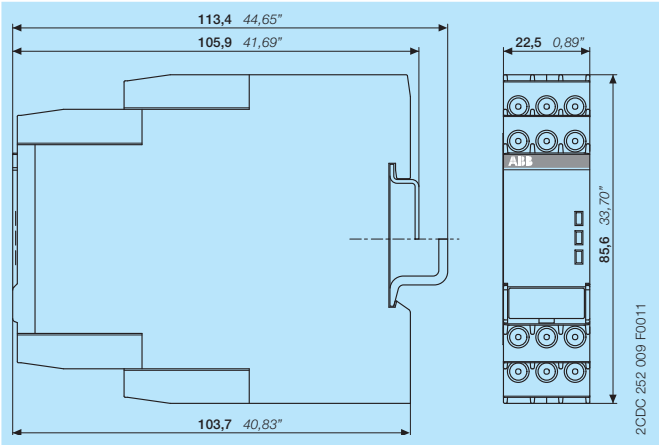

Accessories

in **mm** and *inches*

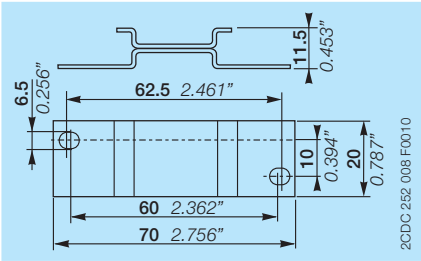

ADP.01 - Adapter for screw mounting

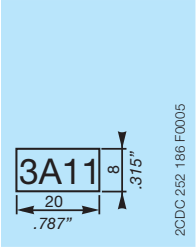

MAR.01 - Marker label

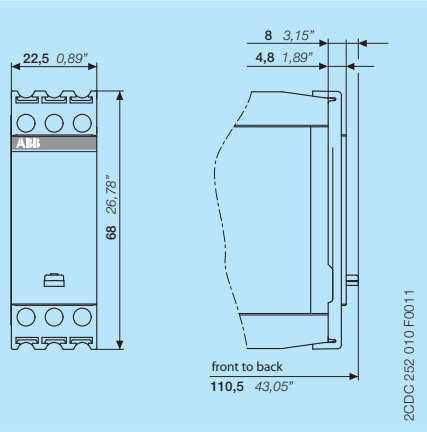

COV.11 - Sealable transparent cover

Further documentation

Document title	Document type	Document number
Electronic Products and Relays	Technical catalogue	2CDC 110 004 C020x
CT-AHS, CT-ARS, CT-MBS, CT-MFS	Instruction manual	1SVC 630 010 M0000

You can find the documentation on the internet at www.abb.com/lowvoltage -> Control Products -> Electronic Relays and Controls -> Time Relays

Contact us

ABB STOTZ-KONTAKT GmbH
P. O. Box 10 16 80
69006 Heidelberg, Germany
Phone: +49 (0) 6221 7 01-0
Fax: +49 (0) 6221 7 01-13 25
E-mail: info.desto@de.abb.com

You can find the address of your
local sales organization on the
ABB home page
http://www.abb.com/contacts
-> Low Voltage Products and Systems

Document number 2CDC 111 113 D0201 printed in Germany (04/2011)

Note:
We reserve the right to make technical changes or modify the contents of this document without prior notice. With regard to purchase orders, the agreed particulars shall prevail. ABB AG does not accept any responsibility whatsoever for potential errors or possible lack of information in this document.