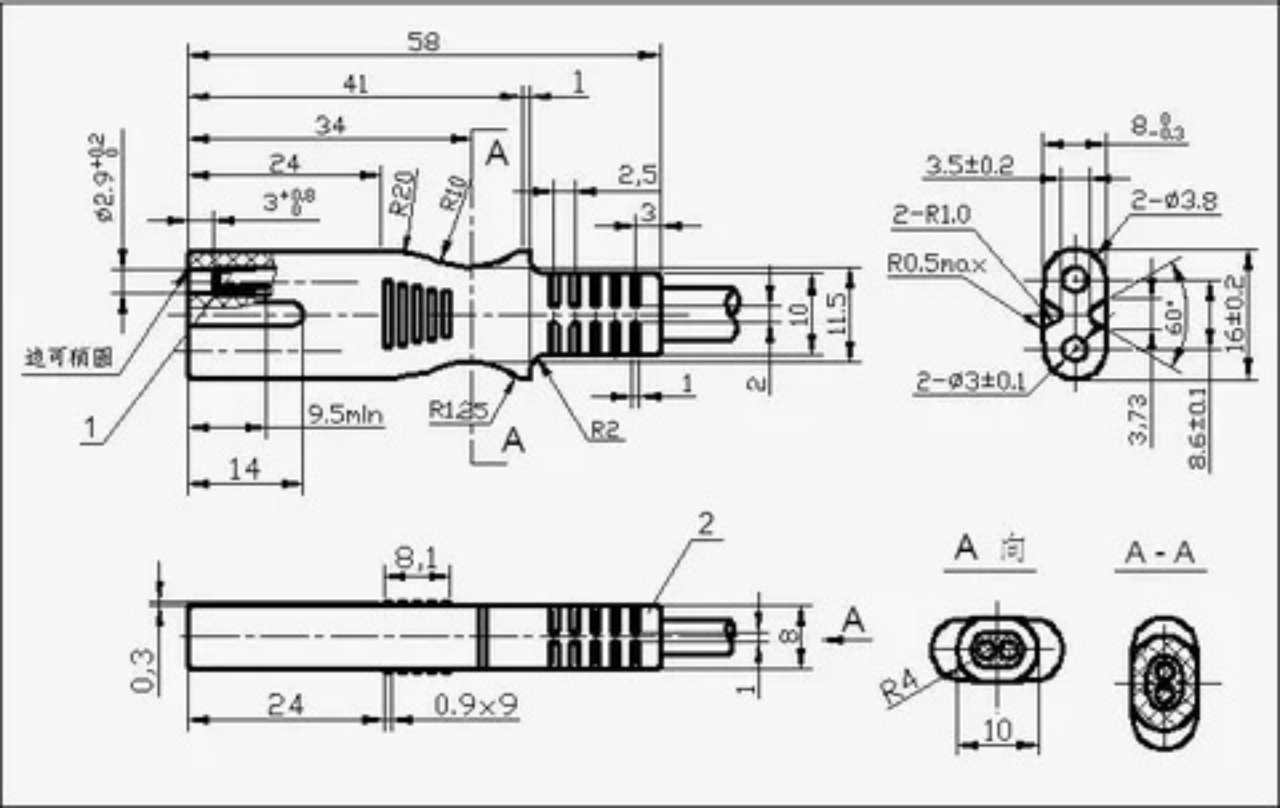
58
41
1
34
24
2,5
3
A
R20
R10
R1.25
R2
9.5min
14
1
2
10
11.5
1
2
8
1
0,3
24
0.9×9
8.1
2
A
3.5±0.2
2-R1.0
R0.5max
2-Ø3.8
60°
16±0.2
2-Ø3±0.1
3.73
8.6±0.1
A 向
R4
10
A - A