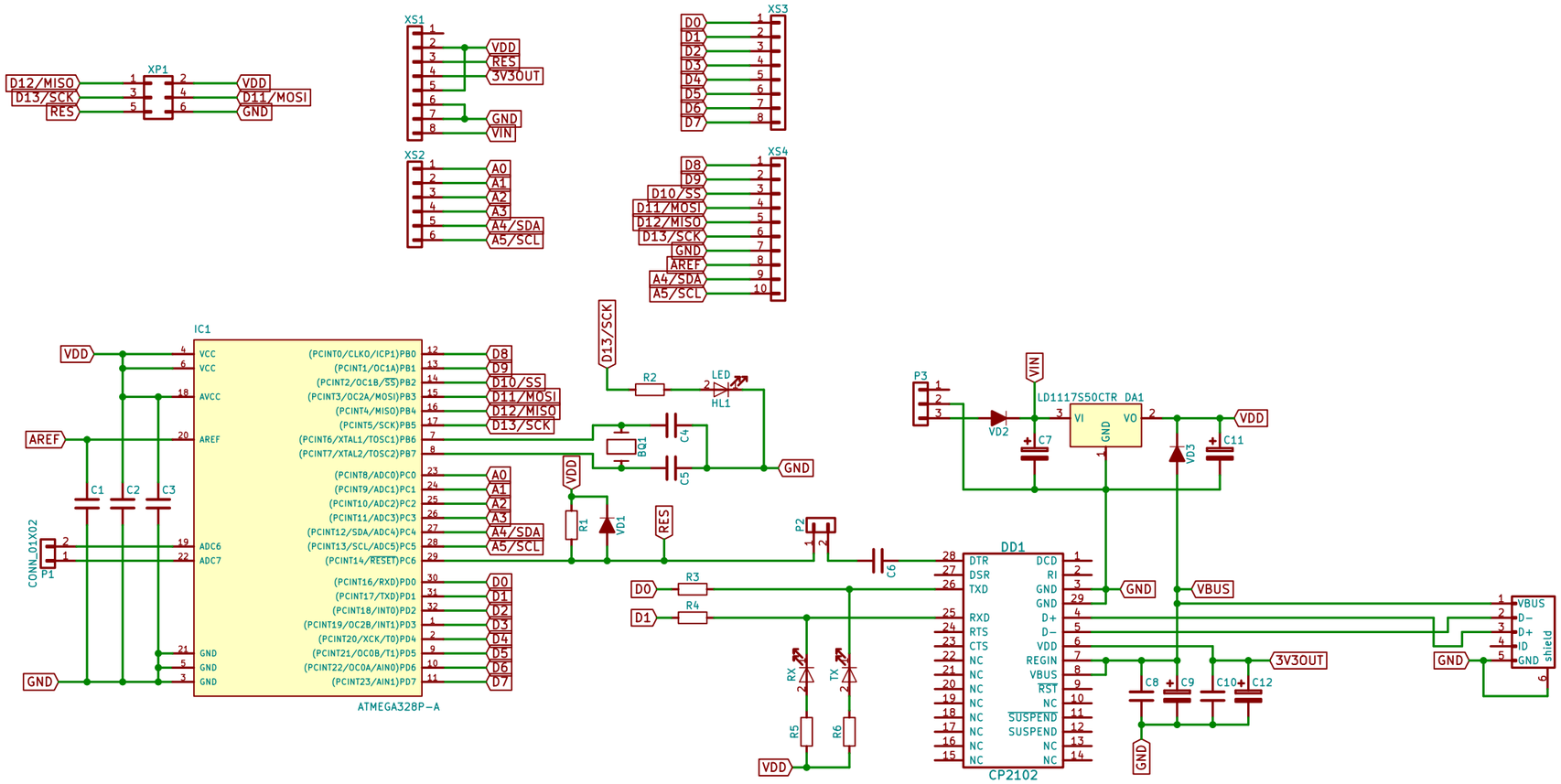
XP1
D12/MISO
D13/SCK
RES
VDD
D11/MOSI
GND
XS1
VDD
RES
3V3OUT
GND
VIN
XS2
A0
A1
A2
A3
A4/SDA
A5/SCL
XS3
D0
D1
D2
D3
D4
D5
D6
D7
XS4
D8
D9
D10/SS
D11/MOSI
D12/MISO
D13/SCK
GND
AREF
A4/SDA
A5/SCL
IC1
ATMEGA328P-A
VCC
AVCC
AREF
ADC6
ADC7
(PCINT0/CLKO/ICP1)PB0
(PCINT1/OC1A)PB1
(PCINT2/OC1B/SS)PB2
(PCINT3/OC2A/MOSI)PB3
(PCINT4/MISO)PB4
(PCINT5/SCK)PB5
(PCINT6/XTAL1/TOSC1)PB6
(PCINT7/XTAL2/TOSC2)PB7
(PCINT8/ADC0)PC0
(PCINT9/ADC1)PC1
(PCINT10/ADC2)PC2
(PCINT11/ADC3)PC3
(PCINT12/SDA/ADC4)PC4
(PCINT13/SCL/ADC5)PC5
(PCINT14/RESET)PC6
(PCINT16/RXD)PD0
(PCINT17/TXD)PD1
(PCINT18/INT0)PD2
(PCINT19/OC2B/INT1)PD3
(PCINT20/XCK/T0)PD4
(PCINT21/OC0B/T1)PD5
(PCINT22/OC0A/AIN0)PD6
(PCINT23/AIN1)PD7
C1
C2
C3
CONN_01X02
P1
R1
VD1
R2
LED
HL1
BQ1
C4
C5
P2
C6
R3
R4
RX
TX
R5
R6
DD1
CP2102
DTR
DSR
TXD
RXD
RTS
CTS
NC
DCD
RI
GND
D+
D−
VDD
REGIN
VBUS
RST
SUSPEND
P3
VD2
C7
LD1117S50CTR DA1
VI
VO
VD3
C11
C8
C9
C10
C12
3V3OUT
VBUS
shield