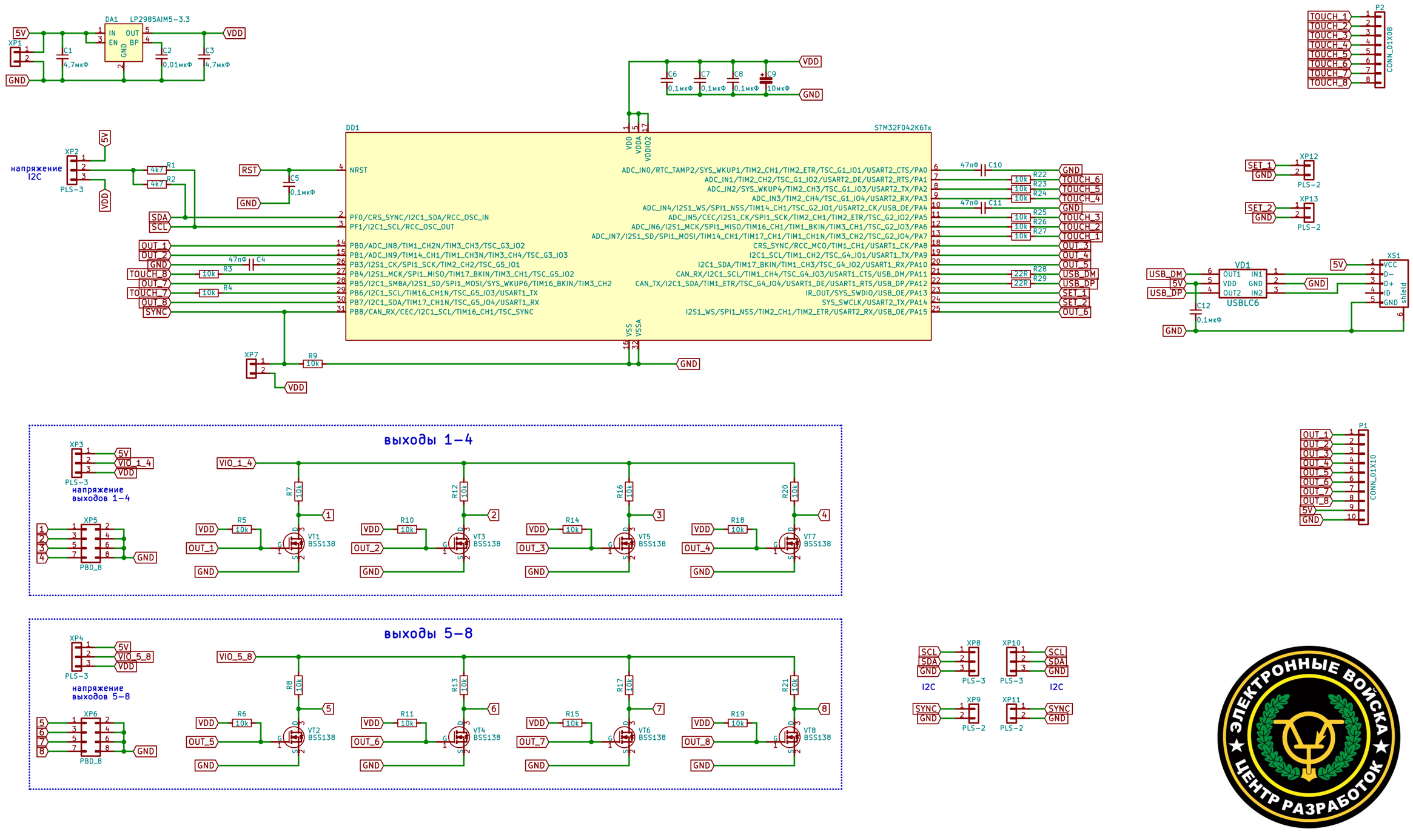
DA1 LP2985AIM5-3.3
IN OUT
EN BP
GND
5V
VDD
XP1
GND
C1 4,7мкФ
C2 0,01мкФ
C3 4,7мкФ
C6 0,1мкФ
C7 0,1мкФ
C8 0,1мкФ
C9 10мкФ
DD1
STM32F042K6Tx
VDD
VDDA
VDDIO2
NRST
RST
C5 0,1мкФ
PF0/CRS_SYNC/I2C1_SDA/RCC_OSC_IN
PF1/I2C1_SCL/RCC_OSC_OUT
SDA
SCL
PB0/ADC_IN8/TIM1_CH2N/TIM3_CH3/TSC_G3_IO2
PB1/ADC_IN9/TIM14_CH1/TIM1_CH3N/TIM3_CH4/TSC_G3_IO3
PB3/I2S1_CK/SPI1_SCK/TIM2_CH2/TSC_G5_IO1
PB4/I2S1_MCK/SPI1_MISO/TIM17_BKIN/TIM3_CH1/TSC_G5_IO2
PB5/I2C1_SMBA/I2S1_SD/SPI1_MOSI/SYS_WKUP6/TIM16_BKIN/TIM3_CH2
PB6/I2C1_SCL/TIM16_CH1N/TSC_G5_IO3/USART1_TX
PB7/I2C1_SDA/TIM17_CH1N/TSC_G5_IO4/USART1_RX
PB8/CAN_RX/CEC/I2C1_SCL/TIM16_CH1/TSC_SYNC
ADC_IN0/RTC_TAMP2/SYS_WKUP1/TIM2_CH1/TIM2_ETR/TSC_G1_IO1/USART2_CTS/PA0
ADC_IN1/TIM2_CH2/TSC_G1_IO2/USART2_DE/USART2_RTS/PA1
ADC_IN2/SYS_WKUP4/TIM2_CH3/TSC_G1_IO3/USART2_TX/PA2
ADC_IN3/TIM2_CH4/TSC_G1_IO4/USART2_RX/PA3
ADC_IN4/I2S1_WS/SPI1_NSS/TIM14_CH1/TSC_G2_IO1/USART2_CK/USB_OE/PA4
ADC_IN5/CEC/I2S1_CK/SPI1_SCK/TIM2_CH1/TIM2_ETR/TSC_G2_IO2/PA5
ADC_IN6/I2S1_MCK/SPI1_MISO/TIM16_CH1/TIM1_BKIN/TIM3_CH1/TSC_G2_IO3/PA6
ADC_IN7/I2S1_SD/SPI1_MOSI/TIM14_CH1/TIM17_CH1/TIM1_CH1N/TIM3_CH2/TSC_G2_IO4/PA7
CRS_SYNC/RCC_MCO/TIM1_CH1/USART1_CK/PA8
I2C1_SCL/TIM1_CH2/TSC_G4_IO1/USART1_TX/PA9
I2C1_SDA/TIM17_BKIN/TIM1_CH3/TSC_G4_IO2/USART1_RX/PA10
CAN_RX/I2C1_SCL/TIM1_CH4/TSC_G4_IO3/USART1_CTS/USB_DM/PA11
CAN_TX/I2C1_SDA/TIM1_ETR/TSC_G4_IO4/USART1_DE/USART1_RTS/USB_DP/PA12
IR_OUT/SYS_SWDIO/USB_OE/PA13
SYS_SWCLK/USART2_TX/PA14
I2S1_WS/SPI1_NSS/TIM2_CH1/TIM2_ETR/USART2_RX/USB_OE/PA15
VSS
VSSA
напряжение I2C
XP2
PLS-3
R1 4k7
R2 4k7
OUT_1
OUT_2
GND
TOUCH_8
OUT_7
TOUCH_7
OUT_8
SYNC
R3 10k
R4 10k
C4 47пФ
XP7
R9 10k
C10 47пФ
C11 47пФ
R22 10k
R23 10k
R24 10k
R25 10k
R26 10k
R27 10k
R28 22k
R29 22k
TOUCH_6
TOUCH_5
TOUCH_4
TOUCH_3
TOUCH_2
TOUCH_1
OUT_3
OUT_4
OUT_5
USB_DM
USB_DP
SET_1
SET_2
OUT_6
P2
CONN_01X08
TOUCH_1
TOUCH_2
TOUCH_3
TOUCH_4
TOUCH_5
TOUCH_6
TOUCH_7
TOUCH_8
XP12
XP13
PLS-2
VD1
USBLC6
OUT1 IN1
VDD GND
OUT2 IN2
C12 0,1мкФ
XS1
VCC
D-
D+
ID
GND
shield
P1
CONN_01X10
OUT_1
OUT_2
OUT_3
OUT_4
OUT_5
OUT_6
OUT_7
OUT_8
5V
GND
выходы 1–4
XP3
напряжение выходов 1–4
VIO_1_4
XP5
PBD_8
R7 10k
R12 10k
R16 10k
R20 10k
R5 10k
R10 10k
R14 10k
R18 10k
VT1 BSS138
VT3 BSS138
VT5 BSS138
VT7 BSS138
выходы 5–8
XP4
напряжение выходов 5–8
VIO_5_8
XP6
R8 10k
R13 10k
R17 10k
R21 10k
R6 10k
R11 10k
R15 10k
R19 10k
VT2 BSS138
VT4 BSS138
VT6 BSS138
VT8 BSS138
XP8
XP10
XP9
XP11
I2C
SCL
SDA
SYNC