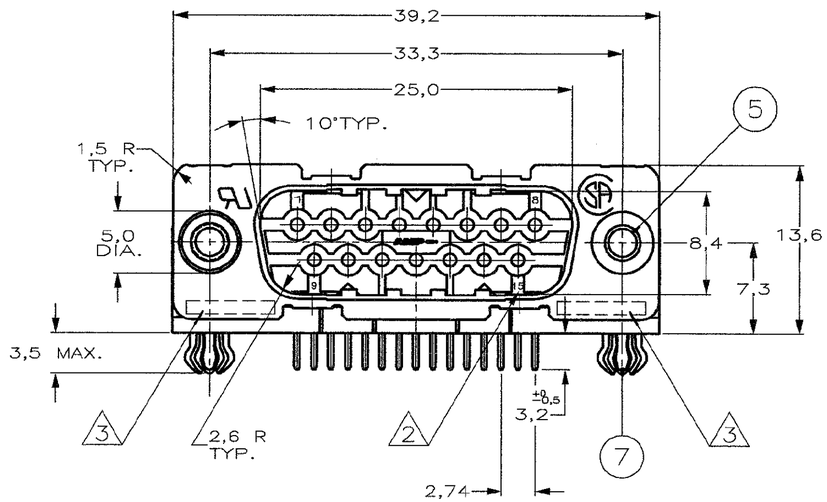

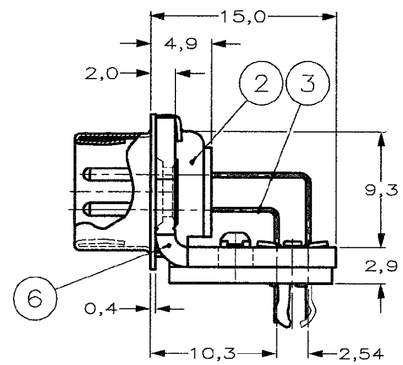

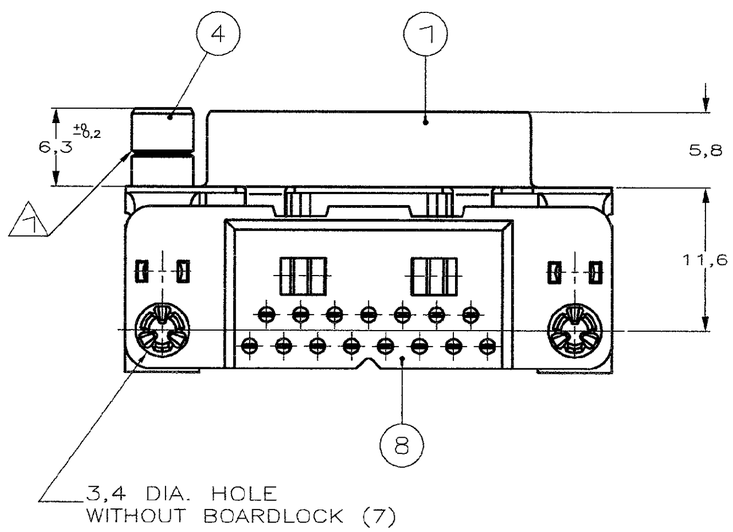

RECOMMENDED P.C. BOARD HOLE-LAYOUT

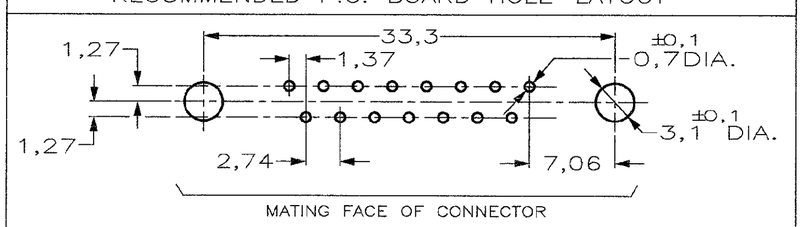

DO NOT SCALE — DIMENSIONS IN mm — METRIC — THIRD ANGLE PROJECTION

ACCESSORIES "Z" PREFIX											
5	3,1 DIA. INSERT	2					2				
5	INSERT WITH INNER THREAD 4-40 UNC		2					2			
5	INSERT WITH INNER THREAD M3			2					2		
4	FEMALE SCREWLOCK WITH 4-40 UNC				2					2	
4	FEMALE SCREWLOCK WITH M3					2					2
7	BOARDLOCK	2	2	2	2	2					
ITEM NR.	DESCRIPTION OF ACCESSORY										

HOW TO ORDER

15 POS.-----> Z-338169-Y

PREFIX FOR ACCESSORIES

BASIC PARTNR.

SUFFIX FOR PLATING

0-XXXXX-Y
1-XXXXX-Y
2-XXXXX-Y
3-XXXXX-Y
4-XXXXX-Y
5-XXXXX-Y
6-XXXXX-Y
7-XXXXX-Y
8-XXXXX-Y
9-XXXXX-Y

PLATING SUFFIX "Y"

GOLD OVER NICKEL AS PER PERFORMANCE LEVEL 2 (DIN 41652) SOLDERPART :2,5µm BRIGHT SnPb. } -Y = -2

1. GROOVE INDICATES VERSION WITH 4-40 UNC INNER THREAD; WITHOUT GROOVE INDICATES VERSION WITH M3 INNER THREAD.
2. CAVITY IDENTIFICATION AT FRONT SIDE ONLY.
3. PARTNUMBER AND DATE CODE.

4 SHELL HAS 2x4 GROUNDING SPRINGS; PITCH IS 3,6 mm

ITEM NRS./MATERIAL :

1 SHELL	: BRIGHT TINPLATED STEEL
2 HOUSING	: GLASSFILLED POLYESTER, COLOR : BLACK
3 CONTACTS	: PH.BRONZE (PLATING : SEE TABLE ABOVE)
4 FEMALE SCREWLOCK	: TINPLATED STEEL (INNER THREAD 4-40 UNC OR M3)
5 INSERT	: TINPLATED STEEL (INNER THREAD 4-40 UNC OR M3 OR 3,1 DIA THRU-HOLE)
6 BRACKET	: TINPLATED STEEL
7 BOARDLOCK	: TINPLATED PHOSPHORBRONZE
8 POSTALIGNMENT PLATE	: GLASSFILLED POLYESTER, COLOR : BLACK

LTR.	REVISION RECORD	DR.	CHK.	DATE
–	–	-	-	-
–	–	-	-	-
–	–	-	-	-
–	–	-	-	-
F	EH-1417-99	T.K.	W.C.	19-02-00
E	EH-0412-00	RVH	R.F.	27 MAR 00
D	EH-0033-99	D.K	W.S	18 JAN 99

CUSTOMER DRAWING FOR REFERENCE ONLY WILL NOT BE UPDATED
© COPYRIGHT 19 - BY AMP-HOLLAND B.V. ALL INTERNATIONAL RIGHTS RESERVED. AMP PRODUCTS MAY BE COVERED BY U.S. AND FOREIGN AND/OR PATENTS PENDING.
THIS DRAWING IS UNPUBLISHED
~~RELEASED FOR PUBLICATION ,19~~

AMP — AMP-HOLLAND B.V. 's-Hertogenbosch, The Netherlands.

NAME: HD-20 SIZE 2 RIGHT ANGLE PLUG HEADER; MARK II+

DR.: D.KESSLER DATE: 16-01-99 | CHK.: W.SOOMERS DATE: 14-02-00 | APP.: W.SOOMERS DATE: -

DWG.No. C-338169 | REV.LTR. F | SHEET 1 OF 1 | A2

R6-129 (REV.04-91)