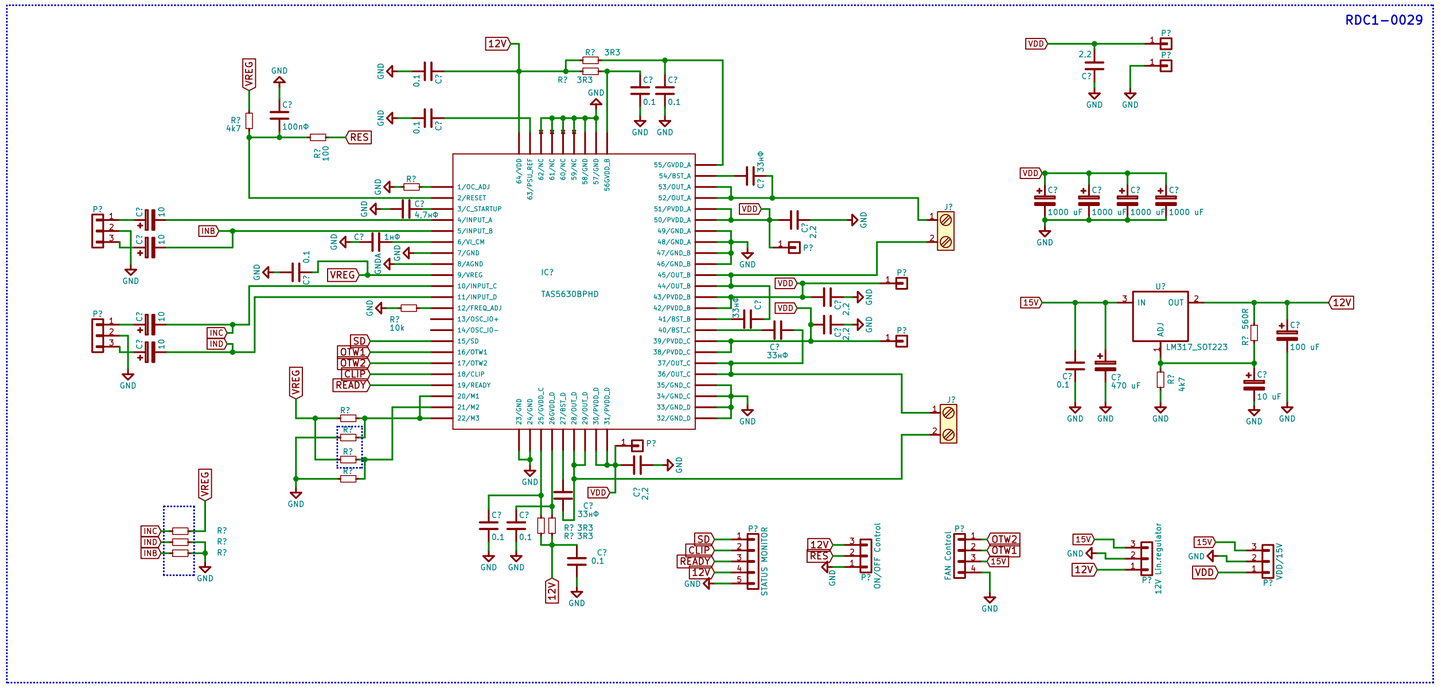
RDC1-0029
IC?
TAS5630BPHD
STATUS MONITOR
ON/OFF Control
FAN Control
12V Lin.regulator
VDD/15V

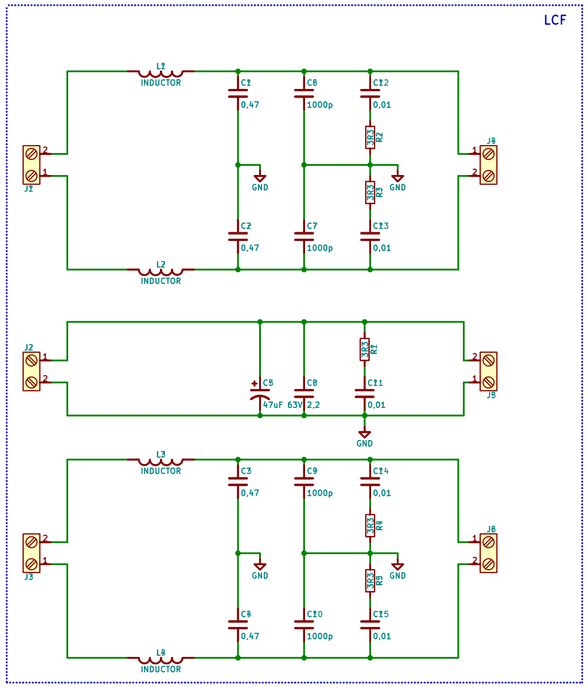
LCF
INDUCTOR
INDUCTOR
INDUCTOR
INDUCTOR

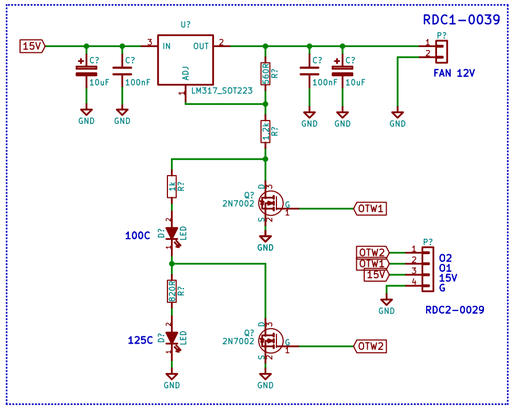
RDC1-0039
LM317_SOT223
FAN 12V
2N7002
100C
125C
RDC2-0029

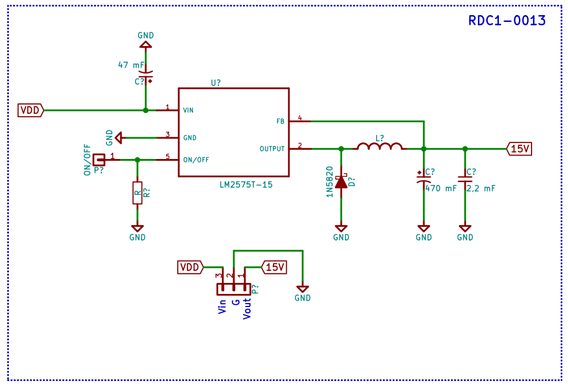
RDC1-0013
LM2575T-15
1N5820