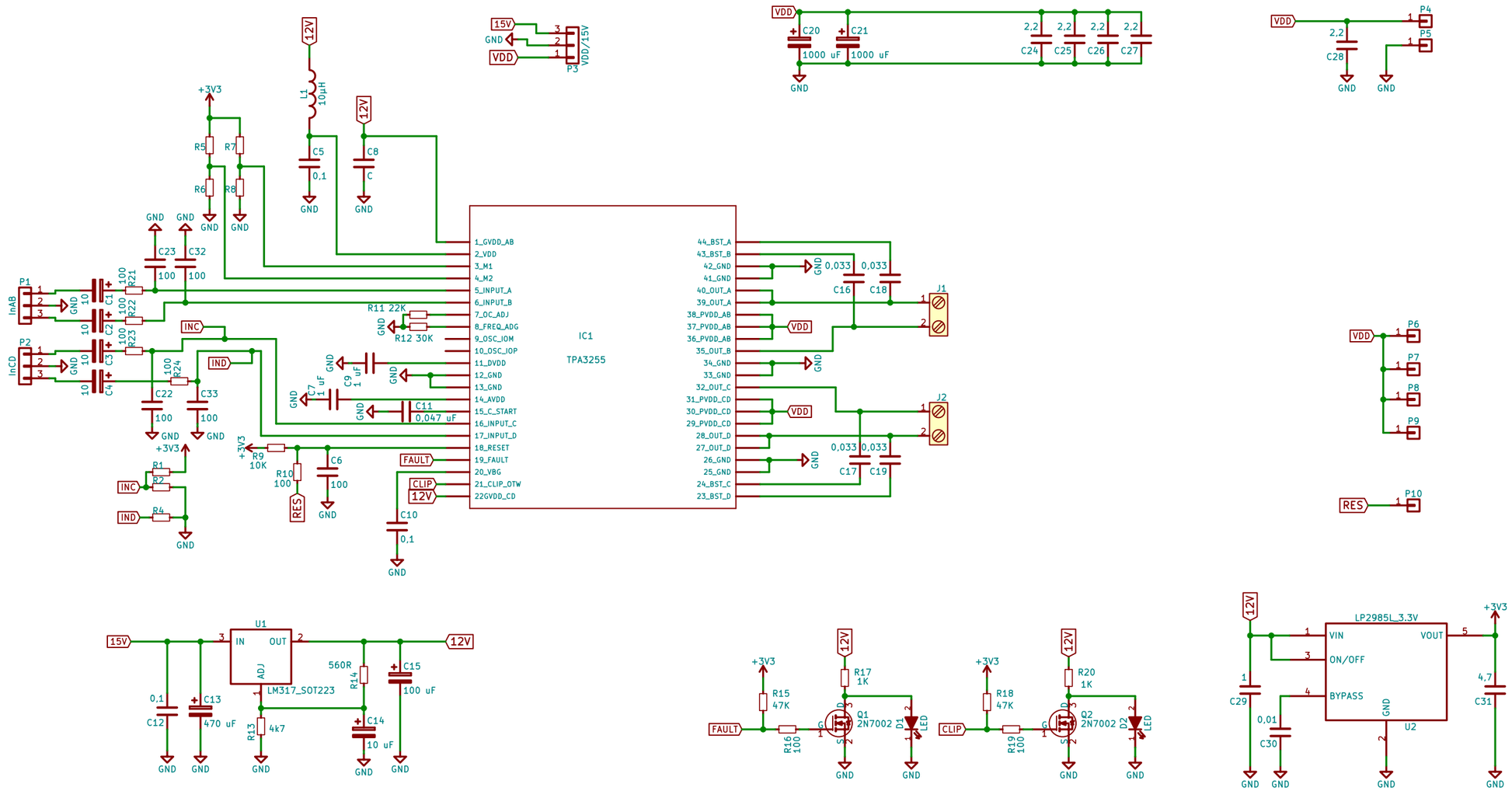
IC1
TPA3255
1_GVDD_AB
2_VDD
3_M1
4_M2
5_INPUT_A
6_INPUT_B
7_OC_ADJ
8_FREQ_ADG
9_OSC_IOM
10_OSC_IOP
11_DVDD
12_GND
13_GND
14_AVDD
15_C_START
16_INPUT_C
17_INPUT_D
18_RESET
19_FAULT
20_VBG
21_CLIP_OTW
22GVDD_CD
44_BST_A
43_BST_B
42_GND
41_GND
40_OUT_A
39_OUT_A
38_PVDD_AB
37_PVDD_AB
36_PVDD_AB
35_OUT_B
34_GND
33_GND
32_OUT_C
31_PVDD_CD
30_PVDD_CD
29_PVDD_CD
28_OUT_D
27_OUT_D
26_GND
25_GND
24_BST_C
23_BST_D
U1
LM317_SOT223
IN
OUT
ADJ
LP2985L_3.3V
VIN
VOUT
ON/OFF
BYPASS
Q1
2N7002
Q2
2N7002
D1
D2
LED
J1
J2
P1
P2
P3
P4
P5
P6
P7
P8
P9
P10
15V
12V
VDD
+3V3
GND
INC
IND
FAULT
CLIP
RES
L1
10µH
C5
0,1
C8
C
C20
C21
1000 uF
C24
C25
C26
C27
C28
C23
C32
C22
C33
C1
C2
C3
C4
R21
R22
R23
R24
R5
R6
R7
R8
R9
10K
R10
100
R11 22K
R12 30K
C6
C7
1 uF
C9
1 uF
C11
0,047 uF
C10
C16
C18
C17
C19
R1
R2
R4
R13
4k7
R14
560R
C12
C13
470 uF
C14
10 uF
C15
100 uF
R15
47K
R16
100
R17
1K
R18
47K
R19
100
R20
1K
C29
C30
0,01
C31
4,7
U2