REVISIONS				
SYM	ZONE	ECN, ERN NO.	DATE	APPRD.
A		PROPOSAL	DEC 21/06	
B		PROPOSAL	OCT 23.08	

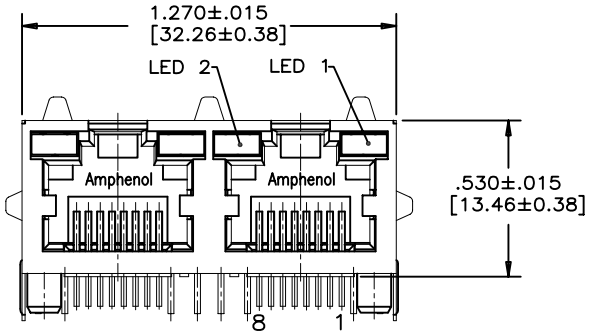

FRONT VIEW

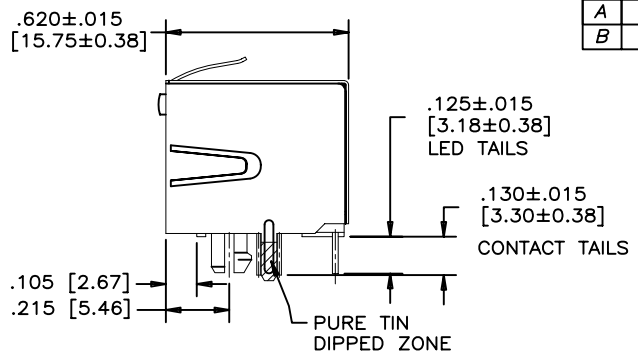

SIDE VIEW

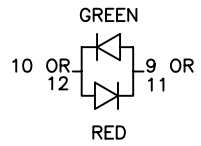

BI–COLOUR LED DETAIL
(YELLOW/GREEN , RED/YELLOW AND GREEN/ORANGE LED'S ARE ALSO AVAILABLE)

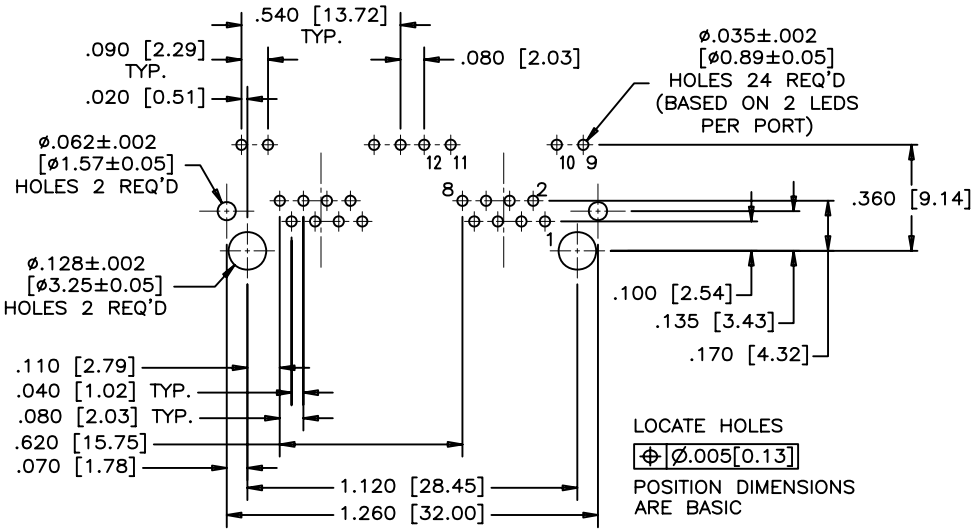

RECOMMENDED P.C.B. LAYOUT
(COMPONENT SIDE OF BOARD)

LOCATE HOLES
⊕ Ø.005[0.13]
POSITION DIMENSIONS ARE BASIC

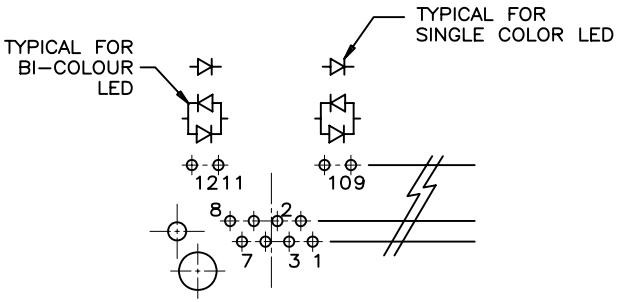

LED SCHEMATIC

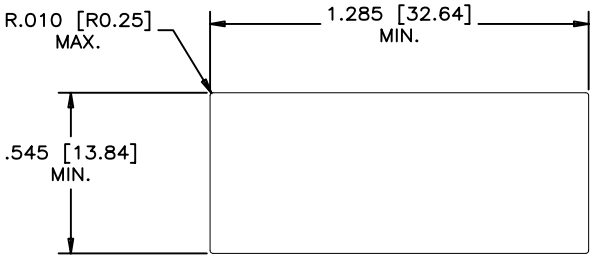

RECOMMENDED PANEL CUTOUT

MATERIALS:

PLASTIC HOUSING: HIGH TEMPERATURE THERMOPLASTIC
FLAMMABILITY RATING UL 94V–0

CONTACTS: PHOSPHOR BRONZE
PLATING: 50 MICRO" [1.27 MICRONS] MIN. NICKEL.
50 MICRO" [1.27 MICRONS] MIN.
GOLD ON MATING SURFACES.
100 MICRO" [2.54 MICRONS] MIN.
MATTE TIN ON CONTACT TAILS.

SHIELD: COPPER ALLOY.
PLATING: NICKEL WITH PURE–TIN DIPPED PCB TAILS.

PART NUMBER: RJHSE–538X–A2
└ REFER TO LED OPTIONS DRAWING FOR ORDERING CODES

THIS DOCUMENT CONTAINS PROPRIETARY INFORMATION AND SUCH INFORMATION MAY NOT BE DISCLOSED TO OTHERS FOR ANY PURPOSE OR USED FOR MANUFACTURING PURPOSES WITHOUT WRITTEN PERMISSION FROM AMPHENOL CANADA CORP.

MATERIAL	DRAWN Jack W	DATE DEC 21/06	Amphenol Canada Corp.
-------	DESIGNED		TITLE 2 PORT HIGH SPEED MODULAR JACK, 8 POSITION, 8 CONTACTS, SHIELDED .130[3.30] CONTACT TAILS. WITH LED OPTIONS – RoHS COMPLIANT
	CHECKED CHIGOW	DEC 21/06	
	I. E. APPRD.		
	Q. A. APPRD.		
FINISH	DWG. APPRD.		DWG C — DRAWING NO. P–RJHSE–538X–A2 — REV. B
-------	ENG. REL. NO.		
	REF.		
	DIMENSIONS ARE IN INCHES [mm]	CODE ID. NO. 03554	SCALE 3/1 — WT. ------ — SURF. ---- — SHEET 1 OF 1

Downloaded from Arrow.com.