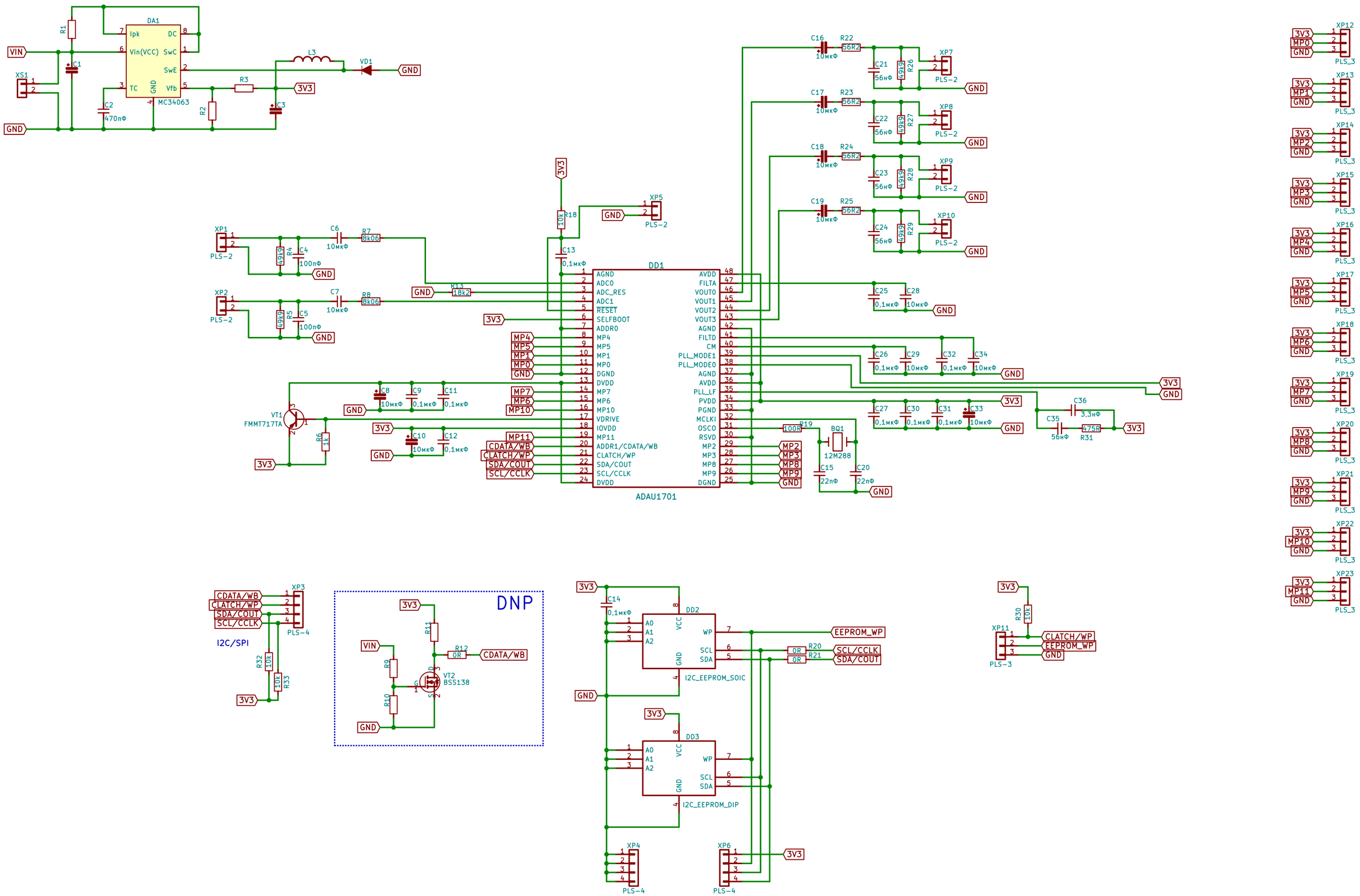

DA1
MC34063
Ipk
Vin(VCC)
TC
GND
DC
SwC
SwE
Vfb
VIN
GND
XS1
R1
C1
C2
470пФ
R2
R3
C3
L3
VD1
3V3
DD1
ADAU1701
AGND
ADC0
ADC_RES
ADC1
RESET
SELFBOOT
ADDR0
MP4
MP5
MP1
MP0
DGND
DVDD
MP7
MP6
MP10
VDRIVE
IOVDD
MP11
ADDR1/CDATA/WB
CLATCH/WP
SDA/COUT
SCL/CCLK
DVDD
AVDD
FILTA
VOUT0
VOUT1
VOUT2
VOUT3
AGND
FILTD
CM
PLL_MODE1
PLL_MODE0
AGND
AVDD
PLL_LF
PVDD
PGND
MCLKI
OSCO
RSVD
MP2
MP3
MP8
MP9
DGND
XP1
XP2
XP5
XP7
XP8
XP9
XP10
XP11
XP12
XP13
XP14
XP15
XP16
XP17
XP18
XP19
XP20
XP21
XP22
XP23
PLS-2
PLS-3
PLS-4
R4
R5
R6
R7
R8
R9
R10
R11
R12
R13
R18
R19
R20
R21
R22
R23
R24
R25
R26
R27
R28
R29
R30
R31
R32
R33
C4
C5
C6
C7
C8
C9
C10
C11
C12
C13
C14
C15
C16
C17
C18
C19
C20
C21
C22
C23
C24
C25
C26
C27
C28
C29
C30
C31
C32
C33
C34
C35
C36
BQ1
12M288
VT1
FMMT717TA
VT2
BSS138
DNP
I2C/SPI
DD2
DD3
I2C_EEPROM_SOIC
I2C_EEPROM_DIP
EEPROM_WP
CDATA/WB
CLATCH/WP
SDA/COUT
SCL/CCLK