DATE 01-Aug-14

P/N 1C218432CC0J

SPECIFICATION OF SURFACE MOUNT TYPE

1 .TYPE	DSX321G
2 .NOMINAL FREQUENCY	18.432000 MHz
3 .LOAD CAPACITANCE(CL)	10.0 pF
4 .DRIVE LEVEL	10 uW +/- 2 uW
5 .FREQUENCY TOLERANCE	+/- 30 $\times 10^{-6}$ at 25 deg.C +/- 3 deg.C
6 .SERIES RESISTANCE	80 ohms max. / CL = SERIES
7 .FREQUENCY CHARACTERISTICS OVER TEMPERATURE	+/- 30 $\times 10^{-6}$ / -20 deg.C to +75 deg.C (ref. +25 deg.C)
8 .OPERATING TEMPERATURE RANGE	-20 deg.C to +75 deg.C
9 .STORAGE TEMPERATURE RANGE	-40 deg.C to +85 deg.C
10 .SHUNT CAPACITANCE(C0)	2.0 pF max.
11 .INSULATION RESISTANCE	500 Mohms min. at 100V DC
12 .OVERTONE ORDER	Fundamental
13 .DIMENSIONS	Refer to Fig-1

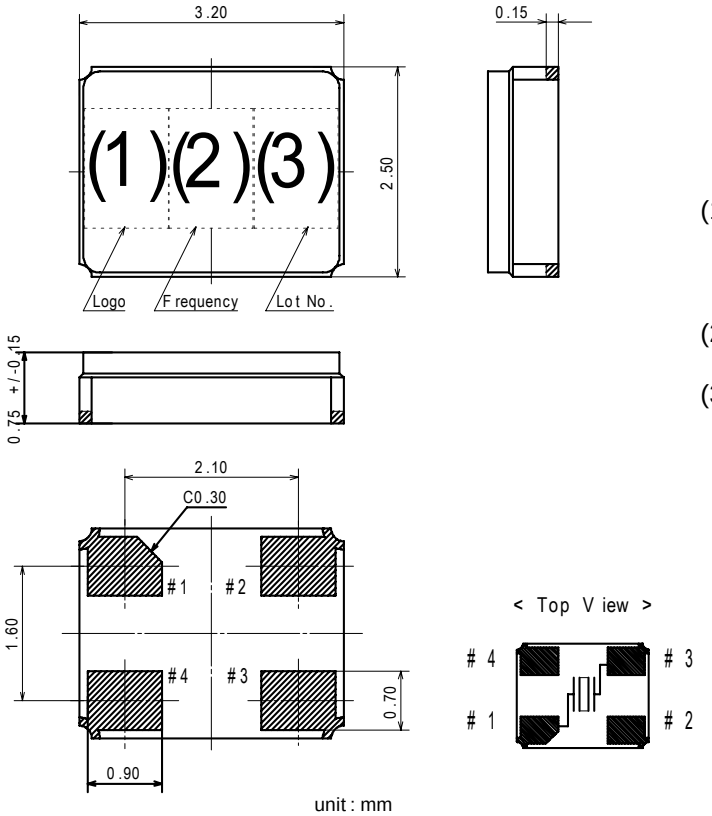

(1). Logo and Manufacturing Location
D : Japan
D : Indonesia

(2). Freq. 18

(3). Lot No.

unit : mm
Tolerance : +/-0.1
Pin #2 #4 is not connected with anything.
Pin #2 #4 must be connected with GND.

Fig.-1

DAISHINKU CORP.