REVISIONS		
ISS	ZONE	DESCRIPTION\PER REQUEST\DATE

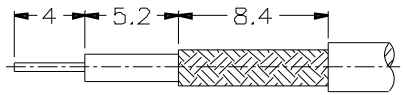

RECOMMENDED
CABLE STRIPPING DIM'S

1. CRIMPED FERRULE
   HEX CRIMP SIZE .178"
2. CRIMPED CONTACT PIN
   HEX CRIMP SIZE .068"
3. MAX. PANEL THICKNESS=3.5mm

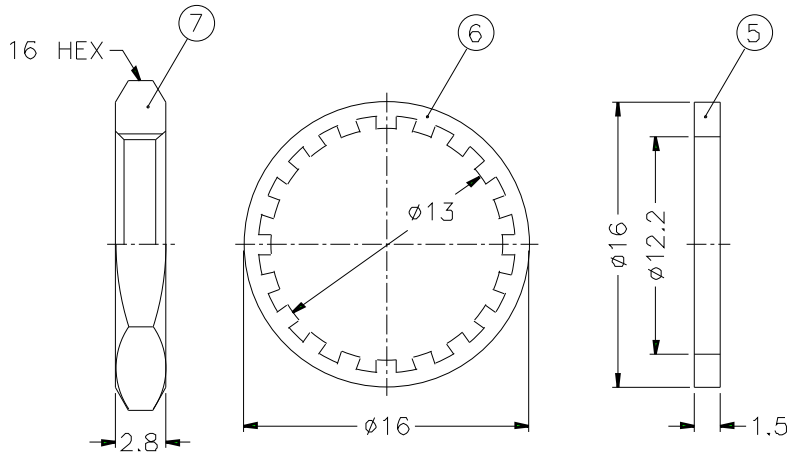

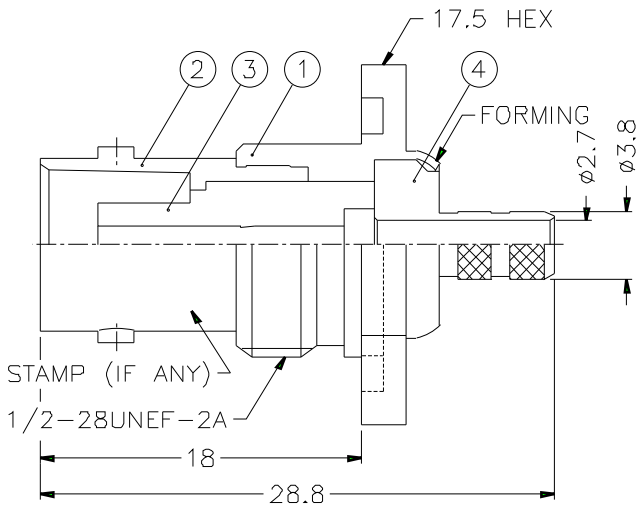

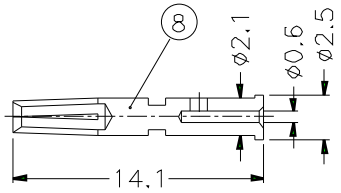

NOTES: FINISH (PLATING THICKNESS IN MICRO-INCHES)
1. BRASS PER QQ-B-626
2. BRASS PER QQ-B-613
3. NICKEL PL. 100 MIN. THICK OVER COPPER STRIKE
4. PHOSPHOR BRONZE PER QQ-B-750
5. GOLD PL. 3 MIN. THICK OVER NICKEL PL. 100 MIN THICK OVER COPPER STRIKE
6. JIS H 3260, C 3501

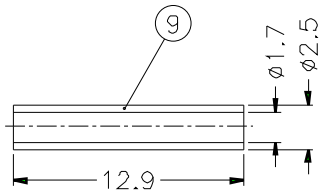

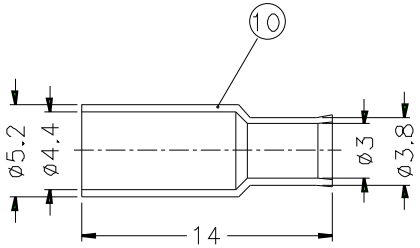

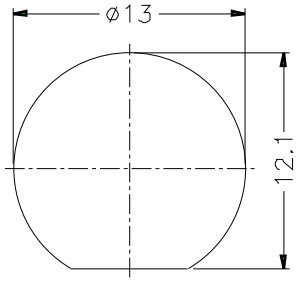

RECOMMENDED
MOUNTING HOLE

NO.	DESCRIPTION	MATERIAL	FINISH	Q'TY	DRAWING NO.
10	FERRULE	NOTE 6	NOTE 3	1	FR-52/44-38/3 X14
9	SLEEVE	DELRIN	NATURAL	1	SL-25/17X129
8	CONTACT PIN	NOTE 4	NOTE 5	1	B74000-8-25/06
7	HEX NUT	NOTE 1	NOTE 3	1	HN16-1/2-28X28
6	LOCK WASHER	NOTE 2	NOTE 3	1	LW-16/13X05
5	GASKET	RUBBER	RED	1	GS-16/122X15
4	BARREL	NOTE 1	NOTE 3	1	B74000-4-38/ 27S
3	INSULATOR	DELRIN	NATURAL	1	B74050-3-50-B
2	BODY	NOTE 1	NOTE 3	1	B74000-2
1	HOUSING	NOTE 1	NOTE 3	1	B74000-1

DIMENSIONS ARE IN MILLIMETERS

UNLESS OTHERWISE SPECIFIED TOLERANCES
0.5-6 = ±0.2
6-30 = ±0.4
30-120 = ±0.6
120-315 = ±1
315-1000 = ±1.6
1000-2000 = ±2.4

SCALE 2.5/1 | ISSUE A

PART NO. B6421E1-ND3G-5-50

APPROVED DATE 10-11-01'

CHECKED DATE 10-11-01'

DRAWN DATE 10-11-01'

FILE NO.

Amphenol

TITLE BNC BULKHEAD CRIMP JACK (FOR RG-174/U,188A/U,316/U)

DRAWING NO. KJ-B6421E1-ND3G-316U-50

ITEM NO.