REVISIONS		
ISS	ZONE	DESCRIPTION\PER REQUEST\DATE

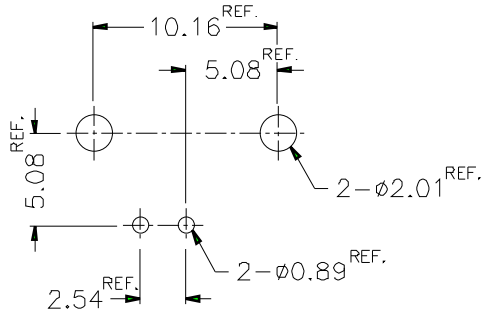

PCB MOUNTING HOLE

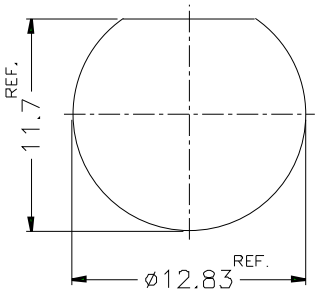

RECOMMENDED MOUNTING HOLE

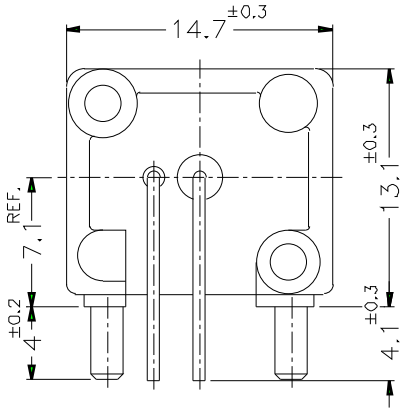

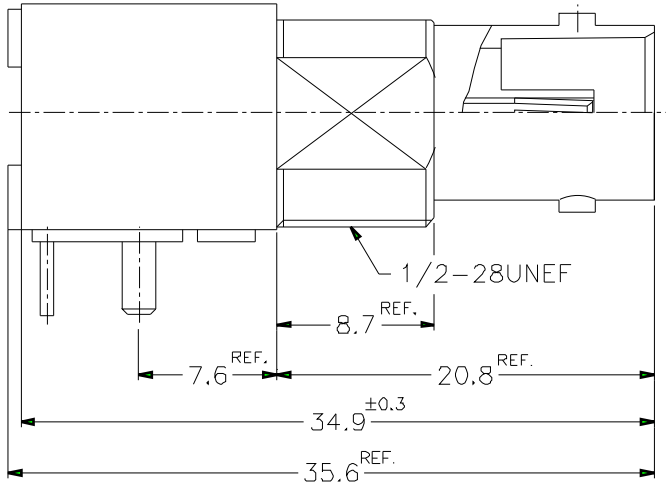

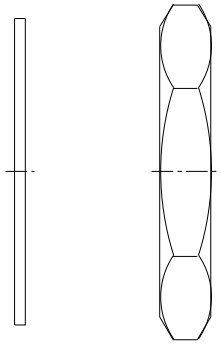

NOTES: FINISH (PLATING THICKNESS IN MICRO-INCHES)
1. BRASS PER QQ-B-626
2. BRASS PER QQ-B-613
3. NICKEL PL. 100 MIN. THICK OVER ZINC ALLOY
4. PHOSPHOR BRONZE PER QQ-B-750
5. GOLD FLASH OVER NICKEL PL. 50 MIN. THICK AT MATING AREA.
TIN-LEAD PL. 100 MIN. THICK OVER NICKEL PL. 50 MIN. THICK AT TAIL
6. ZINC DIECAST
7. POLYPROPYLENE UL 94HB

1. MAX. PANEL THICKNESS=3.2mm

NO.	DESCRIPTION	MATERIAL	FINISH	Q'TY	DRAWING NO.
5	HEX NUT	NOTE 1	NOTE 3		
4	LOCK WASHER	NOTE 2	NOTE 3		
3	CONTACT PIN	NOTE 4	NOTE 5		
2	INSULATOR	NOTE 7	NATURAL		
1	BODY	NOTE 6	NOTE 3		

DIMENSIONS ARE IN MILLIMETERS

UNLESS OTHERWISE SPECIFIED TOLERANCES
0.5-6 = ±0.2
6-30 = ±0.4
30-120 = ±0.6
120-315 = ±1
315-1000 = ±1.6
1000-2000 = ±2.4

SCALE 2 5/1 | ISSUE A

PART NO. B6252HB-NPP3G-75T

APPROVED DATE 10-11-01'

CHECKED DATE 10-11-01'

DRAWN DATE 10-11-01'

FILE NO.

Amphenol

TITLE BNC R/A PC MOUNT RECEPT. JACK

DRAWING NO.

ITEM NO.