Datasheet

Stainless Steel Toggle Latch, Spring Loaded 45kgf Op. Tension

RS Stock number [197-4211]

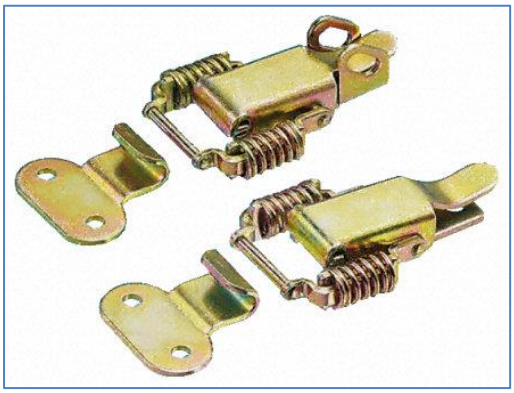

Description:

Available with or without padlock facility
Interchangeable with American models
Wide positioning tolerance created by spring mechanism
Failsafe design prevents over extension of links
Available in zinc passivated steel or A2 stainless steel
Suitable for screw fixing using 2xM5 screws for latch and 2xM5 screws for catch

Features:
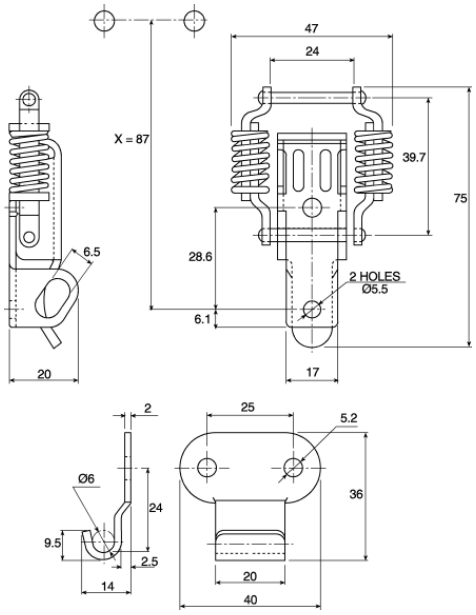
- Dimensions 75 x 47 x 20mm
- Length 75mm
- Lockable Yes, Lock Not Included
- Material Stainless Steel
- Operating Tension 45kgf
- Spring Loaded Yes