Alle Rechte vorbehalten/ *All rights reserved*

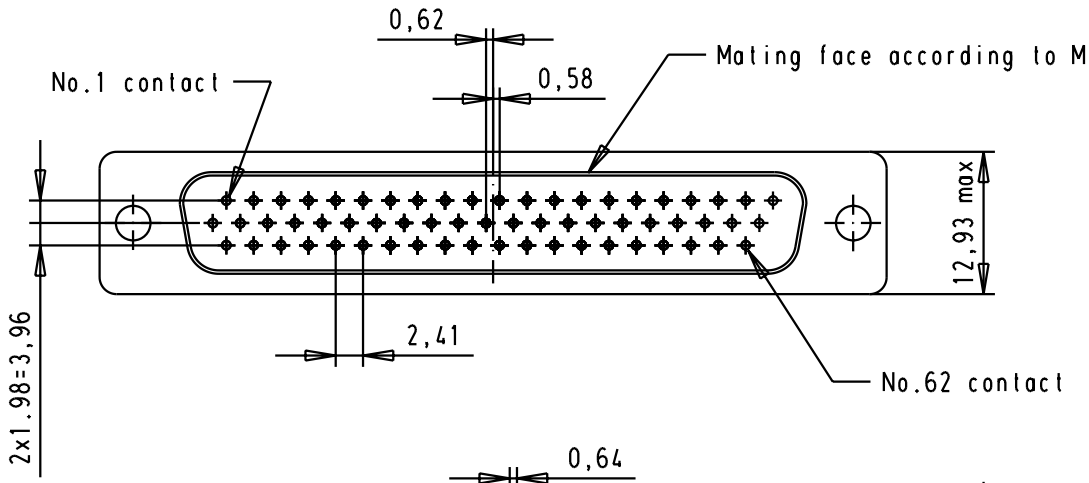

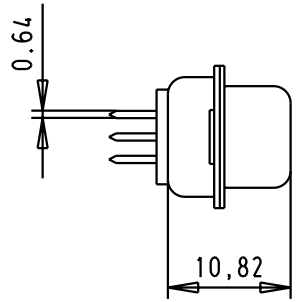

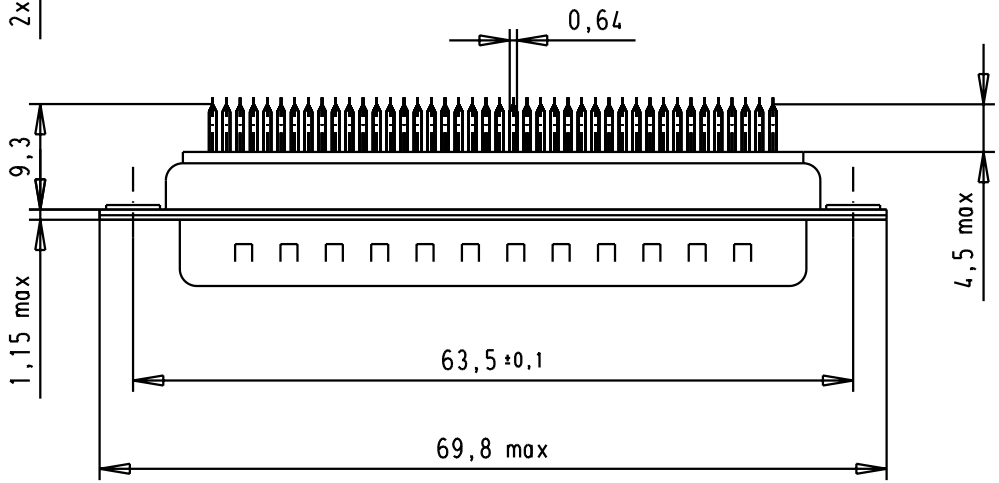

Printed board layout, component side

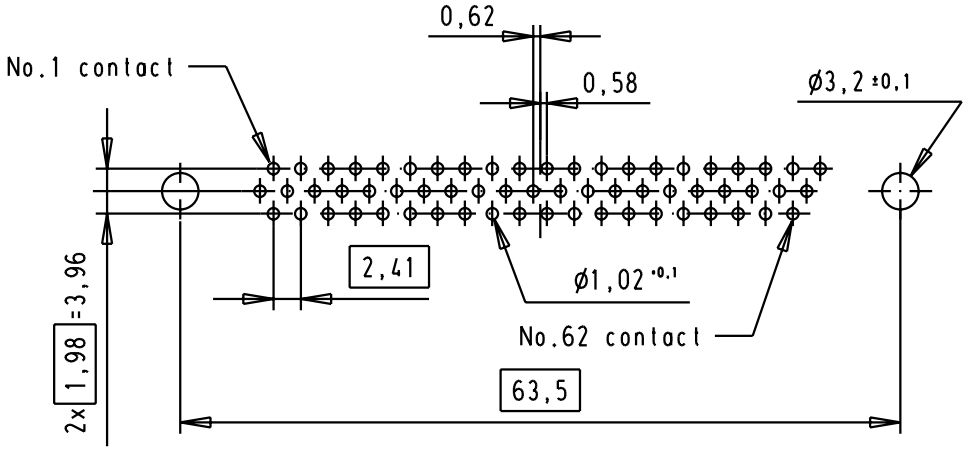

							Dat.	Name		
						Detail.	16-SEP-02	CV	All Dim. in mm Orig. Size DIN A 4	D-Sub, Male, high density, 62 poles, straight, with stamped solder contacts and hole
						Insp.				
			31479	31-MAR-03	S.H.	Stand.				
09564615700	0.76 µm Au		31352	16-OCT-02	S.H.	HARTING EURL F-95972 Paris				TB 0956461x700
09564617700	3		31064	16-SEP-02	CV					
Part number	Performance level		Mod.	Dat.	Name					Sub.

Maßstab/ *Scale* 1.5:1

Blatt/ *Page* 1