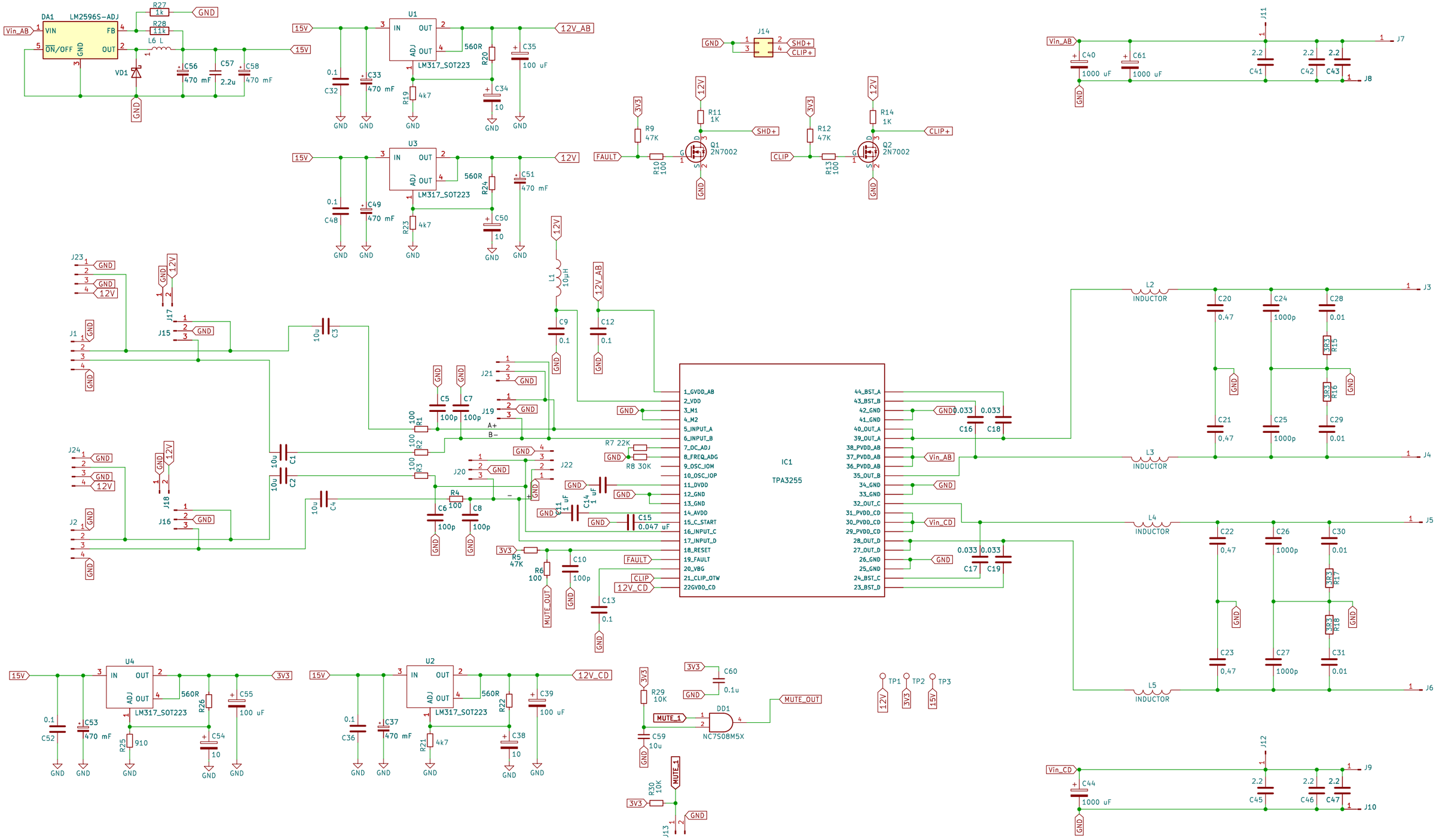

DA1 LM2596S-ADJ
Vin_AB
VIN
FB
ON/OFF
GND
OUT
R27 1k
R28 11k
L6 L
VD1
C56 470 mF
C57 2.2u
C58 470 mF
15V
U1 LM317_SOT223
IN
OUT
ADJ
560R
R20
C35 100 uF
C32 0.1
C33 470 mF
R19 4k7
C34 10
12V_AB
U3 LM317_SOT223
R24
C51 470 mF
C48 0.1
C49 470 mF
R23 4k7
C50 10
12V
J14
SHD+
CLIP+
3V3
R9 47K
R10 100
FAULT
R11 1K
Q1 2N7002
R12 47K
R13 100
CLIP
R14 1K
Q2 2N7002
J11
J7
C40 1000 uF
C61 1000 uF
C41 2.2
C42 2.2
C43 2.2
J8
J23
J17
J15
J1
J24
J18
J16
J2
C3 10u
C1 10u
C2 10u
C4 10u
L1 10µH
C9 0.1
C12 0.1
J21
J19
J20
J22
C5 100p
C7 100p
R1 100
R2 100
R3 100
R4 100
C6 100p
C8 100p
R7 22K
R8 30K
C11 1 uF
C14 1 uF
C15 0.047 uF
R5 47K
R6 100
C10 100p
MUTE_OUT
C13 0.1
IC1
TPA3255
1_GVDD_AB
2_VDD
3_M1
4_M2
5_INPUT_A
6_INPUT_B
7_OC_ADJ
8_FREQ_ADG
9_OSC_IOM
10_OSC_IOP
11_DVDD
12_GND
13_GND
14_AVDD
15_C_START
16_INPUT_C
17_INPUT_D
18_RESET
19_FAULT
20_VBG
21_CLIP_OTW
22GVDD_CD
44_BST_A
43_BST_B
42_GND
41_GND
40_OUT_A
39_OUT_A
38_PVDD_AB
37_PVDD_AB
36_PVDD_AB
35_OUT_B
34_GND
33_GND
32_OUT_C
31_PVDD_CD
30_PVDD_CD
29_PVDD_CD
28_OUT_D
27_OUT_D
26_GND
25_GND
24_BST_C
23_BST_D
0.033 C16
0.033 C18
0.033 C17
0.033 C19
Vin_AB
Vin_CD
L2 INDUCTOR
L3 INDUCTOR
L4 INDUCTOR
L5 INDUCTOR
C20 0.47
C24 1000p
C28 0.01
C21 0.47
C25 1000p
C29 0.01
C22 0.47
C26 1000p
C30 0.01
C23 0.47
C27 1000p
C31 0.01
J3
J4
J5
J6
U4 LM317_SOT223
R26 560R
C55 100 uF
C52 0.1
C53 470 mF
R25 910
C54 10
U2 LM317_SOT223
R22 560R
C39 100 uF
C36 0.1
C37 470 mF
R21 4k7
C38 10
12V_CD
R29 10K
C60 0.1u
DD1 NC7S08M5X
MUTE_1
C59 10u
R30 10K
J13
TP1
TP2
TP3
J12
J9
J10
C44 1000 uF
C45 2.2
C46 2.2
C47 2.2