File No.	392	SHEET	1 / 1

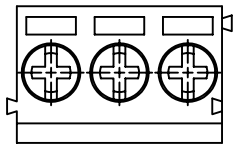

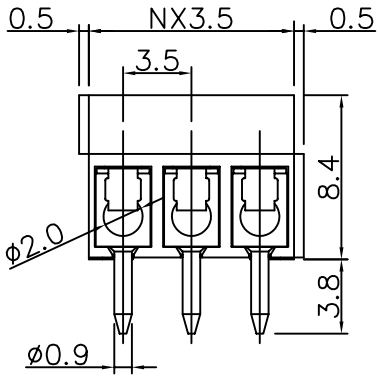

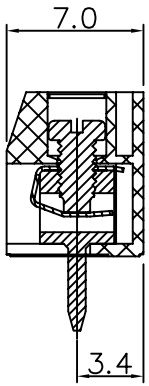

N=Number of contacts

P.C.B. LAYOUT

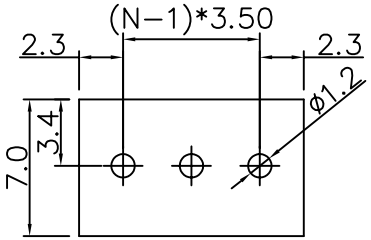

SPECIFICATIONS

Contact(metal housing): Brass (CuZn)
Terminal screw: Steel galvanized and chromatize
or Nickel plated or Tin plted(standard)(optian)
Wire guard: Stainless steel
Surface of solder tail: tin plated
Insulator body(housing): Polyamide(Glass filled)(UL94V−0)
Voltage rating: 125VAC
Current rating: 10 Amps/way max
Contact resistance: 20 Milliohms Max
Insulation resistance: 5000 Megohms/1000V
Withsanding Voltage: 1500VAC(lmim) Test time=60sec/1pcs
Wire range: 16−26AWG
Torque: 1.5kg−cm/M2
Operating temperature: −33°C to +120°C
Soldering ability: 95% Coverage Min
Test temperature= 230°C±10°C
Test time= 4 Sec±0.5 Sec
Soldring reliability:
Test temperature= 250°C±10°C
5 seconds max

4UCON 元化興業股份有限公司
4UCON TECHNOLOGY INC.

DRAWING No.	APPROVED BY MEI	UNLESS OTHERWISE SPECIFIED TOLERANCES ARE					
10679	CHECKED BY BECKY	.X ±0.30					
	DRAWING BY HZF	.XX ±0.10					
		ANG. ±1°					
SCALE NONE	REV. A0	UNIT mm	A0	A0	NEW RELEASE	MEI	
			NO.	REV.	REVISIONS	CHK	DATE