D THIS DRAWING AND DESIGN HEREON CONSTITUTES A PROPRIETARY DESIGN OF PACKARD ELECTRIC DIVISION AND IS NOT TO BE DUPLICATED OR REPRODUCED WITHOUT AUTHORITY OF PACKARD ELECTRIC DIVISION.

DO NOT SCALE

PACKARD ELECTRIC DIVISION
GENERAL MOTORS CORPORATION
WARREN, OHIO

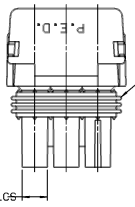

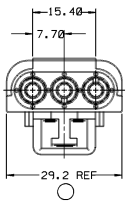

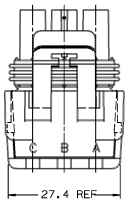

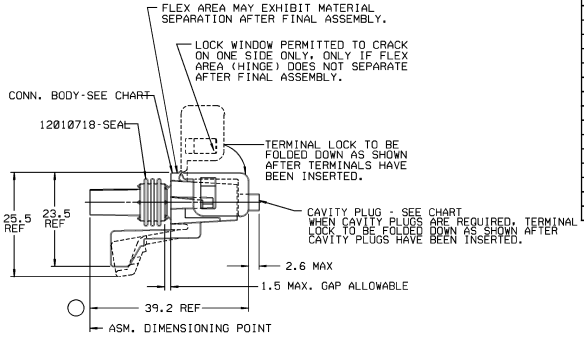

NOTES—1. USE FEMALE TERMINAL 12089188 OR EQUIVALENT FOR 'IN-LINE' APPLICATIONS. USE MALE TERMINAL 12089040 OR EQUIVALENT FOR 'PANEL MOUNT' APPLICATIONS.
2. USE CABLE SEAL 12015323 OR EQUIVALENT.
3. MATING PART-SEE CHART.
4. WHEN PARTS ARE SHIPPED, THEY MUST BE PACKED IN PLASTIC BAGS OR SHIPPING CONTAINERS MUST BE LINED WITH PLASTIC LINERS. BAGS OR LINERS MUST BE SEALED TO AVOID ENTRY OF FOREIGN MATTER.
5. SEALING CODE 3.
6. WHEN DESIGNING A PART TO MATE TO THIS WEATHER PACK CONNECTOR, REQUEST THE LATEST COPY OF DRAWING NUMBER 12020084 FROM THE PACKARD ELECTRIC DIVISION.

DATE	SYM	REVISION RECORD	AUTHORITY	DR	CK
16JL90	—	ALL PARTS - REDRAWN & REVISED NOTE			
		*1, *3; ADDED APPLICATION, TERM. GENDER			
		& STANDARD DESCRIPTION TO CHART.			
		NOTE *6, CAVITY PLUG NOTE - REV LEVEL			
		REMAINS THE SAME; 12034042 WAS SEPARATE			
		C SIZE & REVISED GAP FROM 1.0 MAX TO			
		1.5 MAX - REV LEVEL REMAINS AT *A*	135473	AYL	AYL
16JL90	—	12103398 RELEASED TO REV *A*	900005	AYL	AYL
14JN91	—	ALL PARTS - ADDED INDEX CODE NOTE			
		& REVISED REF DIMS 3 PLCS - 12103398			
		- ADDED 12045440 MATING PART - MATING			
		PART WAS MATING CONN - NO REV			
		UPDATE REQ'D	142375	TS	

PART NO. 1203 4358

PART NUMBER	REV	STATUS	CONNECTOR BODY	APPLICATION	REFERENCE TERMINAL/GENDER	CAVITY PLUGS	MATING PART	STANDARD DESCRIPTION
12103398	A		12103397	DEVICE	12089040/MALE	—	12045440	ASM CONN 3M W/P TWR
12040985	C		12040992	IN-LINE	12089188-FEMALE	—		ASM CONN 3F W/P TWR
12040672	C		12040688	IN-LINE (SIR)	12089188-FEMALE	—		ASM CONN 3F W/P TWR
12034351	C		12034349	IN-LINE	12089188-FEMALE	—	12034350	ASM CONN 3F W/P TWR
12034042	A		12020828	BLOCK-OFF	NONE	12010030-3 PLCS-FOLD COVER	12020827	ASM CONN 3 W/P TWR
12020829	C		12020828	IN-LINE	12089188-FEMALE	—	12020827	ASM CONN 3F W/P TWR

PED/INTERGRAPH MICROSTATION
FILE ####USER#### SPEC: #####SYTIME#####
THIRD ANGLE PROJECTION
METRIC
DIMENSIONS ARE IN MILLIMETERS UNLESS OTHERWISE SPECIFIED.
CODE NO. 6900
TOLERANCE UNLESS OTHERWISE SPECIFIED ONE PLACE ± 0.3 TWO PLACE ± 0.15 ANGULAR ± 5°
G.C. -C-5110
DWG. DATE 27SE82 SCALE NONE
DR. DON YEAGER 27SE82
EST. NO.
CK. T.MURPHY DATE 190C82
REFERENCE NO.
APPR. S.FELIX DATE 190C82
APPR. A.B.MICKHOLTZIO DATE 190C82
MATERIAL SPEC. SEE DRAWING
NAME ASM CONN 3 W/P TWR
PART NO. 1203 4358 SIZE C
PACKARD ELECTRIC

Mouser Electronics

Authorized Distributor

Click to View Pricing, Inventory, Delivery & Lifecycle Information:

Aptiv:
12020829 12020829-B