MICRO SWITCH
a Honeywell Division
FED.MFG.CODE 91929

MINIATURE PRECISION LIMIT SWITCH

CATALOG LISTING
914CE18-6A

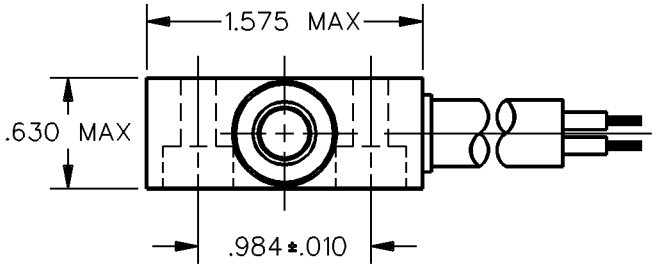

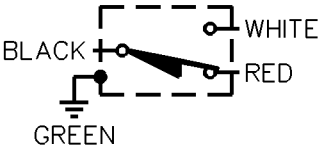

CIRCUIT DIAGRAM

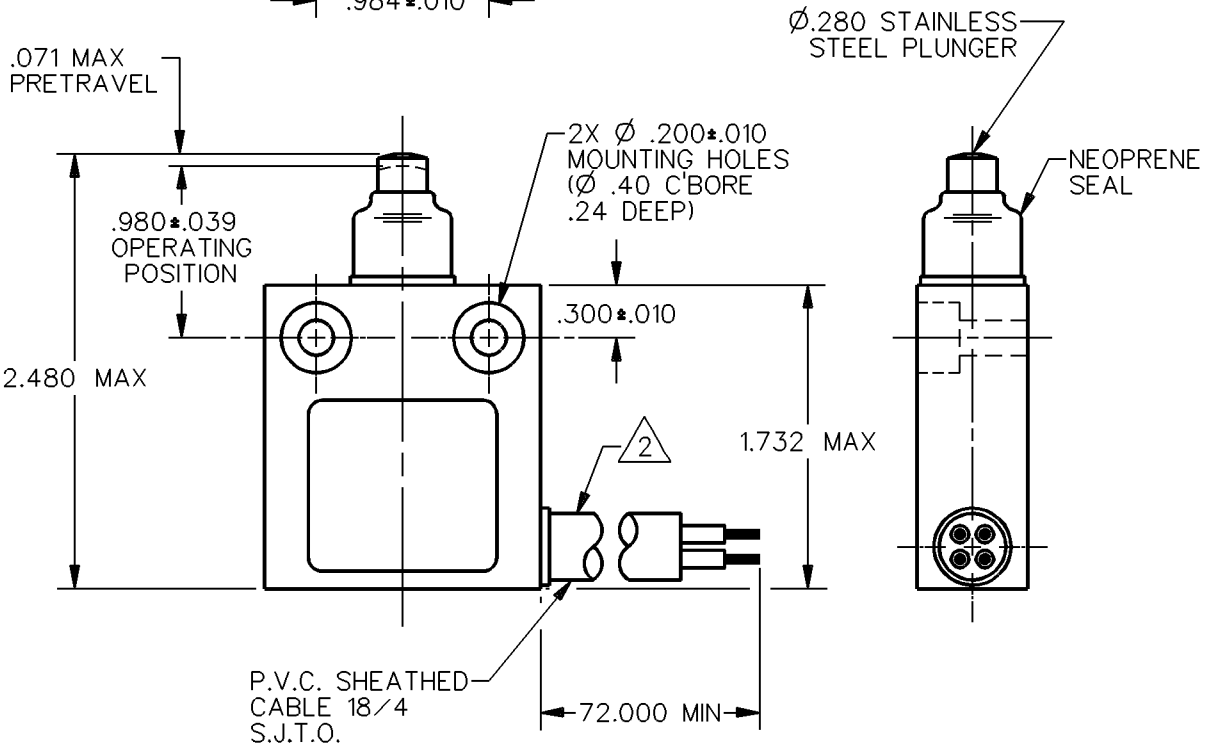

NOTES
1 – ZINC HOUSING FINISHED WITH GRAY PAINT
2 SIDE EXIT CABLE

ANSI Y14.5M-1982 APPLIES

THIS DRAWING COVERS A PROPRIETARY ITEM AND IS THE PROPERTY OF MICRO SWITCH, A DIVISION OF HONEYWELL. THIS DRAWING IS NOT TO BE COPIED OR USED WITHOUT THE APPROVAL OF MICRO SWITCH.

THIRD ANGLE PROJECTION

CHARACTERISTICS	ELECTRICAL DATA	SCALE FULL — DO NOT SCALE PRINT
OPERATING FORCE — — — — 5 LB MAX	CONTACT ARRANGEMENT S P D T	UNLESS OTHERWISE SPECIFIED TOLERANCES ARE
DIFFERENTIAL TRAVEL — — — .004 MAX	5A 1/10HP 125 OR 250 VAC	ONE PLACE (.0) ±.030
OVERTRAVEL — — — — — — .118 MIN		TWO PLACE (.00) ±.015
		THREE PLACE (.000) ±.005
		ANGLES ±
		WEIGHT

914CE18-6A
REPLACES
RELEASE NO. CO-69061
DRAWING NUMBER
ISSUE 1
CHECK
REVISIONS
CHECK
CHECK
DRAWN S A V 9 OCT 91
DDM/CAD

Downloaded from Arrow.com.