THIS DRAWING IS UNPUBLISHED. RELEASED FOR PUBLICATION AUG ,2006.
© COPYRIGHT – BY TYCO ELECTRONICS CORPORATION. ALL RIGHTS RESERVED.

LOC	DIST
DW	—

REVISIONS

P	LTR	DESCRIPTION	DATE	DWN	APVD
	B	REVISED (ECO-11-013077)	23JUN11	JC	WK

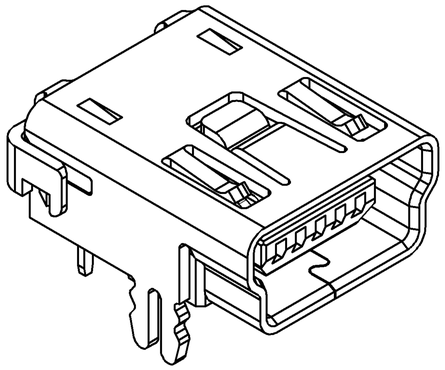

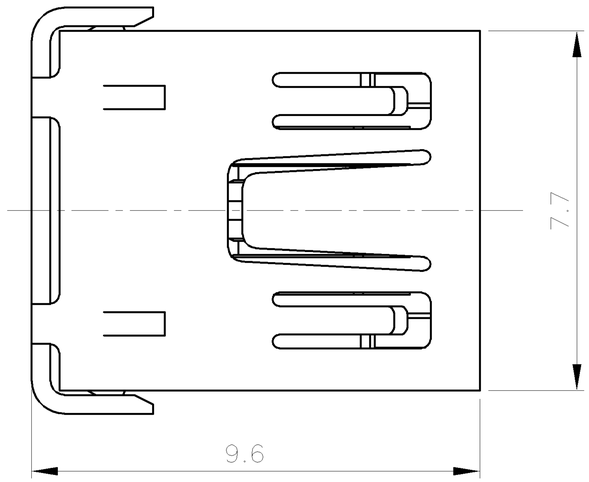

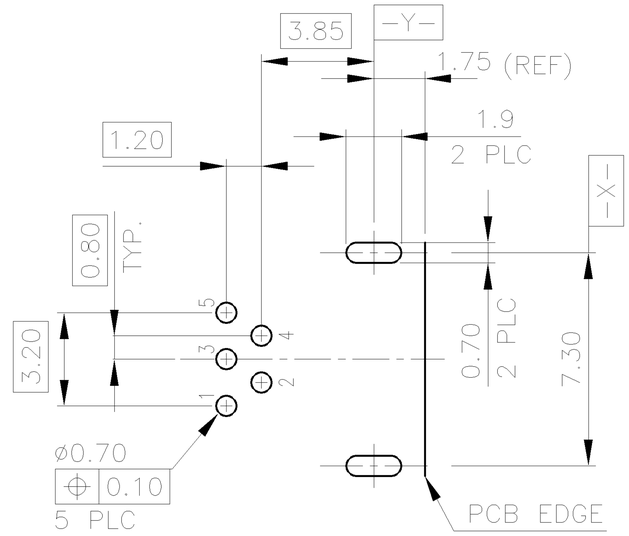

RECOMMENDED PCB LAYOUT (THICKNESS: 1.6MM)

(DIMENSION TOLERANCE: 1 PLC: ±0.1 2PLC: ±0.05)

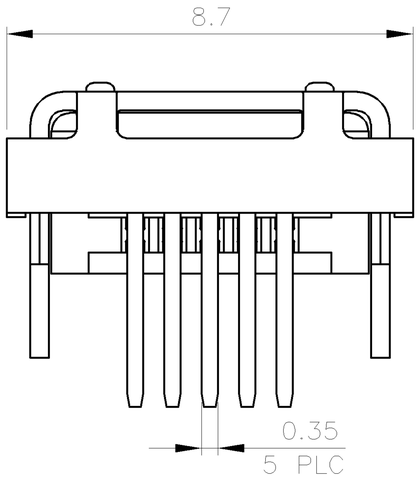

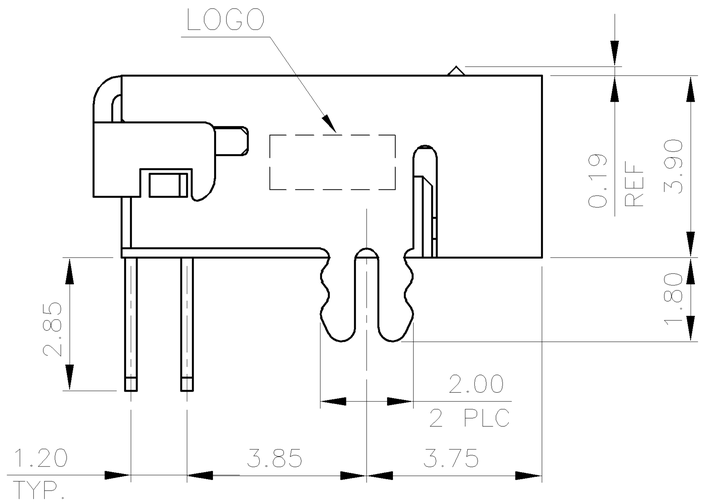

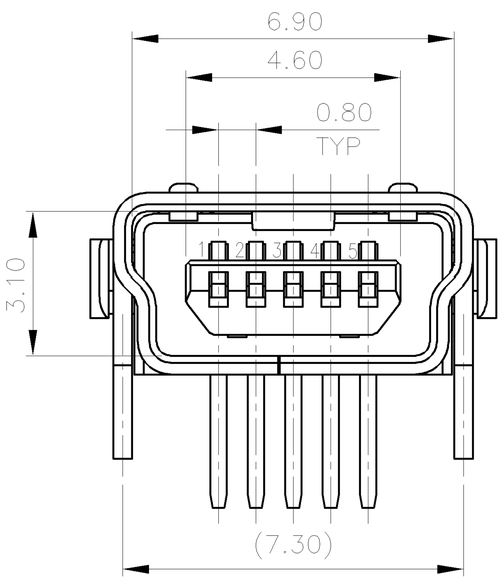

4.	PA9T	1734510-2
3.	PBT	1734510-1
SOLERING PROCESS	HOUSING MATERIAL	PART NUMBER

NOTE:
1. MATERIAL:
   HOUSING: (SEE TABLE) WITH 30% GF, UL 94V-0, COLOR BLACK.
   CONTACT: PHOSPHOR BRONZE, THICKNESS: 0.25mm.
   SHIELD: PHOSPHOR BRONZE, THICKNESS: 0.40mm.
2. FINISH:
   CONTACT: GOLD FLASH OVER
   0.762um [30u"] MIN. PALLADIUM-NICKEL PLATED ON CONTACT AREA,
   2.54um [100u"] MIN. MATTE TIN PLATED ON SOLDERTAILS,
   1.27um [50u"] MIN. NICKEL UNDERPLATED ALL OVER.
   SHIELD: 5.08um [200u"] MIN. MATTE TIN OVER 2.54um [100u"] MIN. Cu.
   UNDERPLATED ALL OVER.

3. WAVE SOLDER CAPABLE TO 240°C. PER TE SPEC 109-202, CONDITION A.
4. WAVE SOLDER CAPABLE TO 265°C PER TE SPEC 109-202, CONDITION B.

THIS DRAWING IS A CONTROLLED DOCUMENT.

DIMENSIONS: MM

TOLERANCES UNLESS OTHERWISE SPECIFIED:

0 PLC	± 0.5
1 PLC	± 0.35
2 PLC	± 0.25
3 PLC	± 0.15
4 PLC	± –
ANGLES	± 3°

MATERIAL: SEE NOTE

FINISH: SEE NOTE

DWN	S. CHIEN	20JAN2009
CHK	S. CHIEN	20JAN2009
APVD	W. KODAMA	20JAN2009

PRODUCT SPEC: 108-57062

QUALIFICATION TEST REPORT: 501-57070

WEIGHT: 0.62 GRAMS

TE Connectivity

NAME: MINI USB CONN., RCPT R/A, DIP, B TYPE

SIZE	CAGE CODE	DRAWING NO	RESTRICTED TO
A3	00779	C-1734510	—

CUSTOMER DRAWING | SCALE — | SHEET 1 OF 2 | REV B

THIS DRAWING IS UNPUBLISHED. RELEASED FOR PUBLICATION AUG ,2006.
© COPYRIGHT – BY TYCO ELECTRONICS CORPORATION. ALL RIGHTS RESERVED.

LOC	DIST
DW	—

REVISIONS

P	LTR	DESCRIPTION	DATE	DWN	APVD
		SEE SHEET 1.			

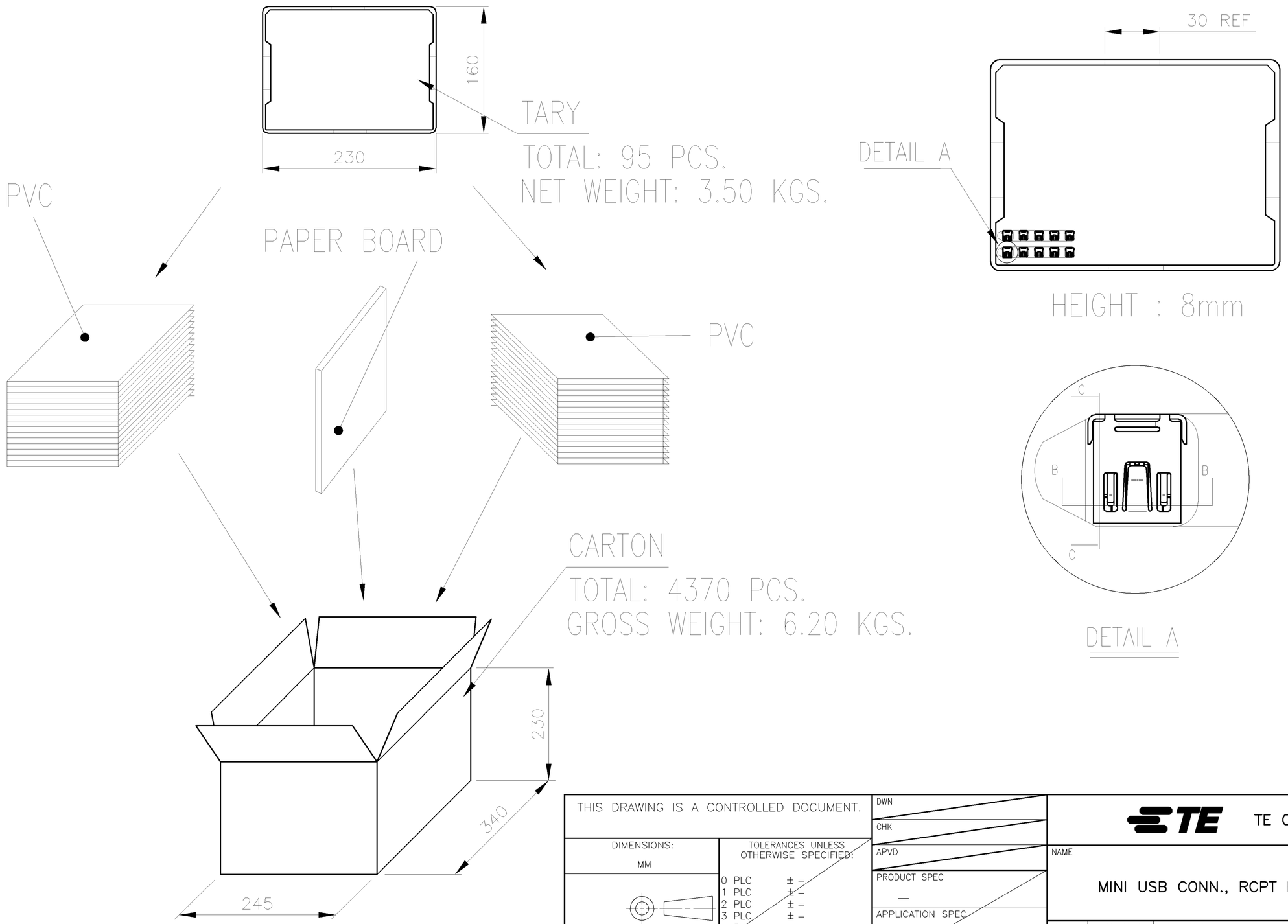

THIS DRAWING IS A CONTROLLED DOCUMENT.

DIMENSIONS: MM

TOLERANCES UNLESS OTHERWISE SPECIFIED:

0 PLC	± –
1 PLC	± –
2 PLC	± –
3 PLC	± –
4 PLC	± –
ANGLES	± –

MATERIAL –

FINISH –

DWN

CHK

APVD

PRODUCT SPEC —

APPLICATION SPEC —

WEIGHT —

TE Connectivity

NAME

MINI USB CONN., RCPT R/A, DIP, B TYPE

SIZE	CAGE CODE	DRAWING NO	RESTRICTED TO
A3	00779	C-1734510	—

CUSTOMER DRAWING

SCALE	SHEET	REV
—	2 OF 2	B