5.0 mm Power Key Connectors (5.0 PKC) (Wire-to-Board)

Product Facts

- **Compact design with 19.4 mm mated height**
- **Power circuit connector with 5.0 mm contact centerline**
- **Wire-to-board connectors consisting of plug housings for wires and PCB header assemblies**
- **With a clear clicking sound, contact insertions can be made easier. The double lock plate provides for complete loading of contacts**
- **Locking levers are surrounded by walls, which protect levers and prevent tangling with wires**
- **Connector is designed to release bubbles created by the process of potting (PC board coating)**
- **Housing lances also help prevent tangling of wired contacts**
- **Recognized under the Component Program of Underwriters Laboratories Inc., File No. E28476**
- **Certified by Canadian Standards Association, File No. LR7189**

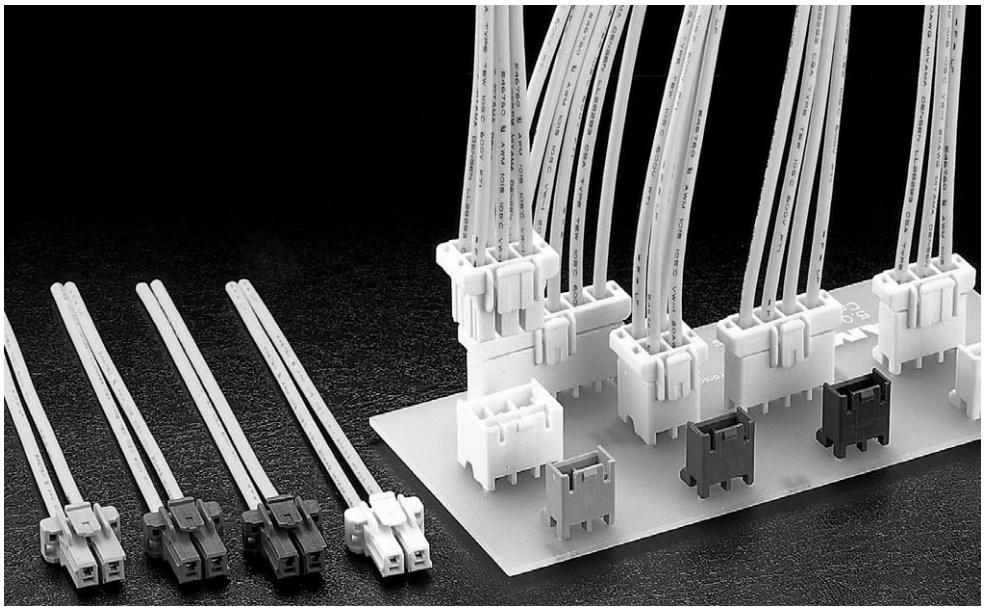

5.0 mm Power Key Connectors are for power circuits of home appliances, especially targeting gas appliances. The connector features four kinds of keying per housing.

Only color-coding of housings limited the efficiency of blind mating where you could not see connectors. However, the new keying mechanism not only improves assembly efficiency but also helps prevent mismating.

Part numbers involved can be reduced so that purchasing and stock level control can be made simpler.

Performance Characteristics

Voltage Rating—300 VAC[1]

Current Rating—10A max.[2]

Operating Temperature—-30°C ~ +105˚C

Applicable Wire—24-16 AWG

Applicable PC Board Thickness—1.6 mm

1 Excludes header tyne round space. Usable for 150 VAC applications when the round dimensions are 3 mm or less.

2 Specified values vary according to the number of contacts and the wire used. The 10 A maximum value applies to 16 AWG wire used with 2 contacts.

Technical Documents

Product Specification
108-5699

Application Specification
114-5292

Catalog 82181
Revised 4-08
www.tycoelectronics.com

Dimensions are in inches and millimeters unless otherwise specified. Values in brackets are metric equivalents.

Dimensions are shown for reference purposes only. Specifications subject to change.

USA: 1-800-522-6752
Canada: 1-905-470-4425
Mexico: 01-800-733-8926
C. America: 52-55-1106-0803
South America: 55-11-2103-6000
Hong Kong: 852-2735-1628
Japan: 81-44-844-8013
UK: 44-8706-080-208

5.0 mm Power Key Connectors (5.0 PKC) (Wire-to-Board) (Continued)

Quick Reference Chart for Mating Part Numbers

No. of Pos.	Plug Housing		Applicable Double Lock Plate Part Number	Mating Header Assy. Part Number
	Type of Keying/Color	Part Number		
2	Type A/Natural	1376388-1	1376394-1	1376382-1
	Type B/Red	1-1376388-2	1376394-1	1-1376382-2
	Type C/Blue	2-1376388-3	1376294-1	2-1376382-3
	Type D/Yellow	3-1376388-4	1376394-1	3-1376382-4
3	Type A/Natural	1376389-1	1376395-1	1376383-1 1376421-1
	Type B/Red	1-1376389-2	1376395-1	1-1376383-2 1-1376421-2
	Type C/Blue	2-1376389-3	1376395-1	2-1376383-3 2-1376421-3
	Type D/Yellow	3-1376389-4	1376395-1	3-1376383-4 3-1376421-4
4	Type A/Natural	1376390-1	1376396-1	1376384-1
	Type B/Red	1-1376390-2	1376396-1	1-1376384-2
	Type C/Blue	2-1376390-3	1376396-1	2-1376384-3
	Type D/Yellow	3-1376390-4	1376396-1	3-1376384-4
6	Type A/Natural	1376391-1	1376397-1	1376385-1
	Type B/Red	1-1376391-2	1376397-1	1-1376385-2
	Type C/Blue	2-1376391-3	1376397-1	2-1376385-3
	Type D/Yellow	3-1376391-4	1376397-1	3-1376385-4
2 Row				
4	Type A/Natural	1376392-1	1376394-1	1376386-1
	Type B/Red	1-1376392-2	1376394-1	1-1376386-2
	Type C/Blue	2-1376392-3	1376394-1	2-1376386-3
	Type D/Yellow	3-1376392-4	1376394-1	3-1376386-4
6	Type A/Natural	1376393-1	1376395-1	1376387-1
	Type B/Red	1-1376393-2	1376395-1	1-1376387-2
	Type C/Blue	2-1376393-3	1376395-1	2-1376387-3
	Type D/Yellow	3-1376393-4	1376395-1	3-1376387-4

*Included in Header Assy. line are Tube Stick version. Refer to the appropriate description in the catalog.

Note: All part numbers are RoHS Compliant.

Mating Configurations

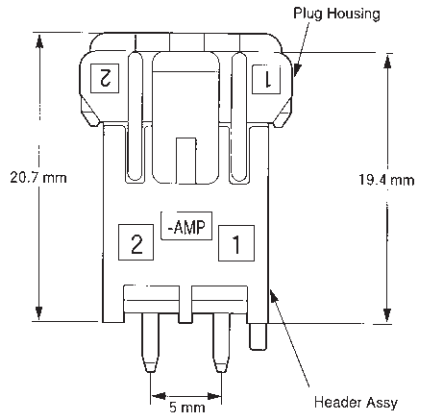

Note: Dimensions shown are metric.

Catalog 82181
Revised 4-08
www.tycoelectronics.com

Dimensions are in inches and millimeters unless otherwise specified. Values in brackets are metric equivalents.

Dimensions are shown for reference purposes only. Specifications subject to change.

USA: 1-800-522-6752
Canada: 1-905-470-4425
Mexico: 01-800-733-8926
C. America: 52-55-1106-0803
South America: 55-11-2103-6000
Hong Kong: 852-2735-1628
Japan: 81-44-844-8013
UK: 44-8706-080-208

5.0 mm Power Key Connectors (5.0 PKC) (Wire-to-Board) (Continued)

Receptacle Contacts

Material and Finish
Pre-tinned Copper Alloy

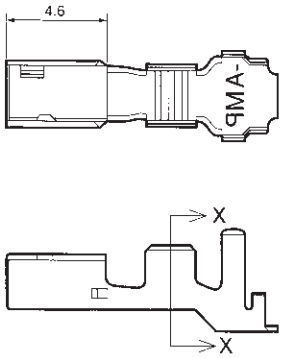

Section X-X

Wire Range		Wire Ins. Dia.	Receptacle Contact Part No.	Applicator Part No.
AWG	mm²			
24~20	0.22~0.53	1.89~2.7	1376348-1 (Strip Form)	*
20~16	0.5~1.25	2.0~3.1	1376347-1 (Strip Form)	*

* Contact the Tooling Assistance Center (TAC) at 1-800-722-1111 for Applicator Part Number.

Note: Dimensions shown are metric.

Note: All part numbers are RoHS Compliant.

Double Lock Plates

Material and Finish
UL94V-0, 6/6 Nylon, glass filled, Black

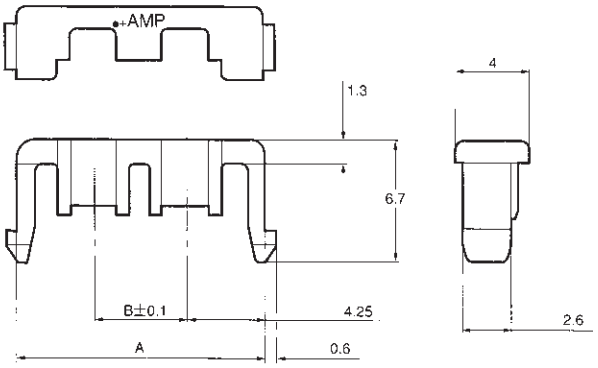

No. of Pos.	Dimensions (Double Lock Plate)		Double Lock Plate Part No.	Applicable Plug Part No.
	A	B		
2	13.5	5	1376394-1	□-1376388-□ □-1376392-□
3	18.5	10	1376395-1	□-1376389-□ □-1376393-□
4	23.5	15	1376396-1	□-1376390-□
6	33.5	25	1376397-1	□-1376391-□

* Contact the Tooling Assistance Center (TAC) for Applicator Part Number.

Note: Dimensions shown are metric.

Note: All part numbers are RoHS Compliant.

Dimensions are in inches and millimeters unless otherwise specified. Values in brackets are metric equivalents.

Dimensions are shown for reference purposes only. Specifications subject to change.

USA: 1-800-522-6752
Canada: 1-905-470-4425
Mexico: 01-800-733-8926
C. America: 52-55-1106-0803
South America: 55-11-2103-6000
Hong Kong: 852-2735-1628
Japan: 81-44-844-8013
UK: 44-8706-080-208

5.0 mm Power Key Connectors (5.0 PKC) (Wire-to-Board) (Continued)

Plug Housings (For Receptacle Contacts)

Material and Finish
Housing—6/6 Nylon, glass filled

Related Product Data
Receptacle Contacts—page 137
Double Lock Plates—page 137
Mating Headers—page 140

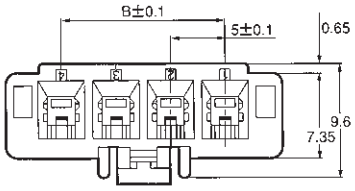

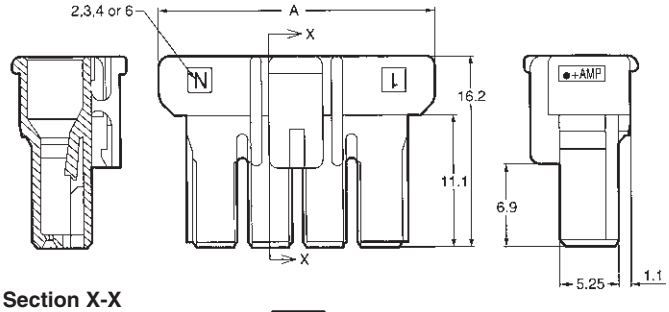

Section X-X

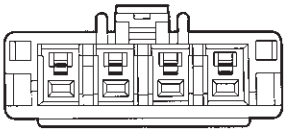

Type of Keying/Color

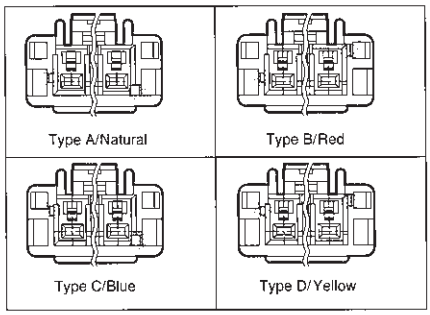

No. of Pos.	Dimensions		Plug Housing Part No. Type of Keying/Color				Applicable Double Lock Plate Part Number	Mating Header Assy. Part Number
	A	B	Type A Natural	Type B Red	Type C Blue	Type D Yellow		
2	15	—	1376388-1	1-1376388-2	2-1376388-3	3-1376388-4	1376394-1	□-1376382-□
3	20	10	1376389-1	1-1376389-2	2-1376389-3	3-1376389-4	1376395-1	□-1376383-□ □-1376421-□
4	25	15	1376390-1	1-1376390-2	2-1376390-3	3-1376390-4	1376396-1	□-1376384-□
6	35	25	1376391-1	1-1376391-2	2-1376391-3	3-1376391-4	1376397-1	□-1376385-□

Note: Dimensions shown are metric.

Note: All part numbers are RoHS Compliant.

Catalog 82181
Revised 4-08
www.tycoelectronics.com

Dimensions are in inches and millimeters unless otherwise specified. Values in brackets are metric equivalents.

Dimensions are shown for reference purposes only. Specifications subject to change.

USA: 1-800-522-6752
Canada: 1-905-470-4425
Mexico: 01-800-733-8926
C. America: 52-55-1106-0803
South America: 55-11-2103-6000
Hong Kong: 852-2735-1628
Japan: 81-44-844-8013
UK: 44-8706-080-208

5.0 mm Power Key Connectors (5.0 PKC) (Wire-to-Board) (Continued)

Plug Housing (2 Rows) (For Receptacle Contacts)

Material and Finish
Housing—6/6 Nylon, glass filled

Related Product Data
Receptacle Contacts—page 137
Double Lock Plates—page 137
Mating Headers—page 141

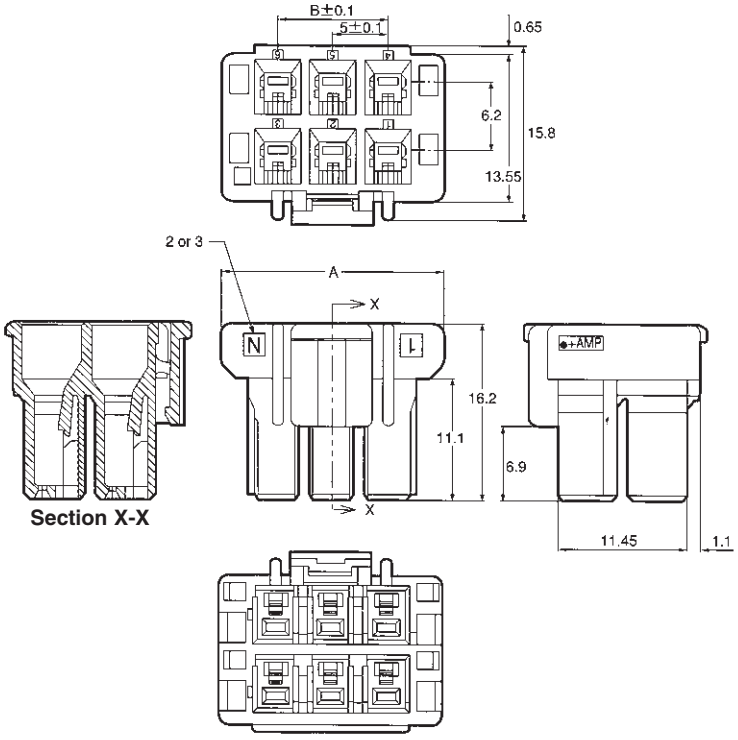

Type of Keying/Color

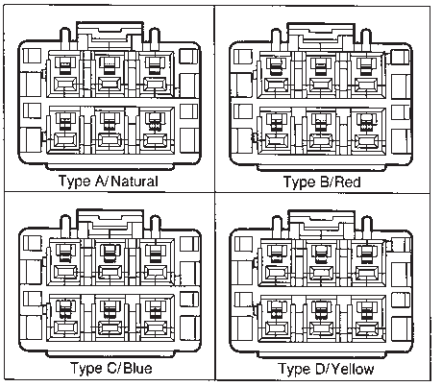

No. of Pos.	Dimensions		Plug Housing Part No. Type of Keying/Color				Applicable Double Lock Plate Part Number	Mating Header Assy. Part Number
	A	B	Type A Natural	Type B Red	Type C Blue	Type D Yellow		
4	15	—	1376392-1	1-1376392-2	2-1376392-3	3-1376392-4	1376394-1	□-1376386-□
6	20	10	1376393-1	1-1376393-2	2-1376393-3	3-1376393-4	1376395-1	□-1376387-□

Note: Dimensions shown are metric.

Note: All part numbers are RoHS Compliant.

Catalog 82181
Revised 4-08
www.tycoelectronics.com

Dimensions are in inches and millimeters unless otherwise specified. Values in brackets are metric equivalents.

Dimensions are shown for reference purposes only. Specifications subject to change.

USA: 1-800-522-6752
Canada: 1-905-470-4425
Mexico: 01-800-733-8926
C. America: 52-55-1106-0803
South America: 55-11-2103-6000
Hong Kong: 852-2735-1628
Japan: 81-44-844-8013
UK: 44-8706-080-208

5.0 mm Power Key Connectors (5.0 PKC) (Wire-to-Board) (Continued)

Vertical Header Assembly

Material and Finish
Housing—6/6 Nylon, glass filled
Tab Contacts -Copper Alloy, Tin plated

Related Product Data
Mating Plug Housings—page 138

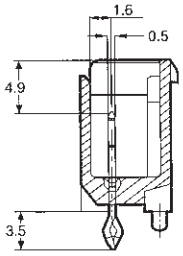

Section X-X

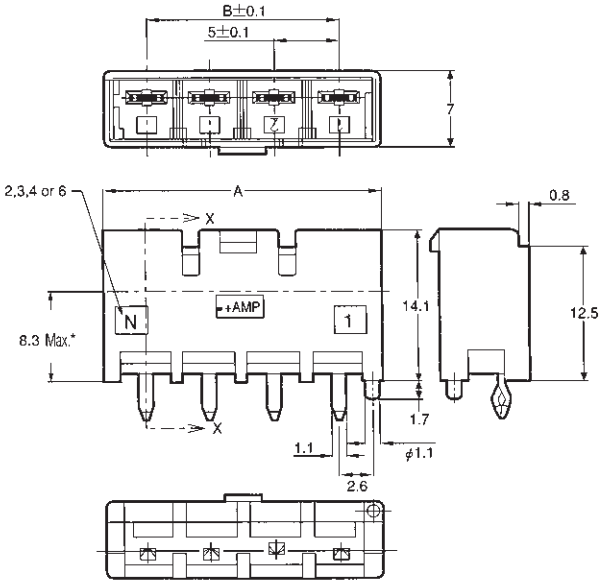

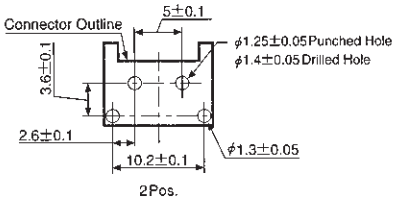

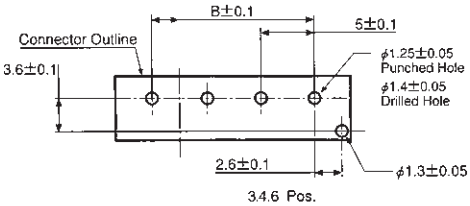

PC Board Layout

Type of Keying/Color

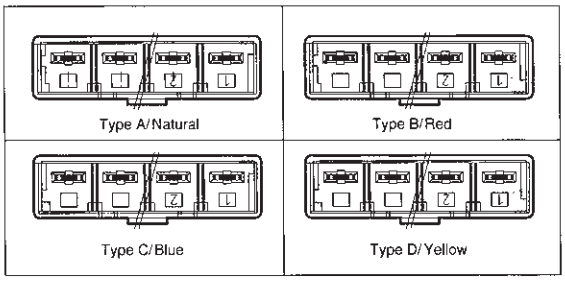

No. of Pos.	Dimensions A	Dimensions B	Loose Piece Tube (Qty.)	Vertical Header Assy. Part No. Type of Keying/Color: Type A Natural	Type B Red	Type C Blue	Type D Yellow	Mating Plug Housing Part Number
2	11.6	—	L.P	1376382-1	1-1376382-2	2-1376382-3	3-1376382-4	□-1376388-□
			Tube	1376437-1 (40)	1-1376437-2 (40)	2-1376437-3 (40)	3-1376437-4 (40)	
3	16.6	10	L.P	1376383-1	1-1376383-2	2-1376383-3	3-1376383-4	□-1376389-□
			Tube	1376439-1 (25)	1-1376439-2 (25)	2-1376439-3 (25)	3-1376439-4 (25)	
4	21.6	15	L.P	1376384-1	1-1376384-2	2-1376384-3	3-1376384-4	□-1376390-□
			Tube	1376440-1 (20)	1-1376440-2 (20)	2-1376440-3 (20)	3-1376440-4 (20)	
6	31.6	25	L.P	1376385-1	1-1376385-2	2-1376385-3	3-1376385-4	□-1376391-□
			Tube	1376441-1 (15)	1-1376441-2 (15)	2-1376441-3 (15)	3-1376441-4 (15)	
2*	16.6	10	L.P	1376421-1	1-1376421-2	2-1376421-3	3-1376421-4	□-1376389-□
			Tube	1376444-1 (25)	1-1376444-2 (25)	2-1376444-3 (25)	3-1376444-4 (25)	

*10 mm centerline

Note: Dimensions shown are metric.

Note: All part numbers are RoHS Compliant.

Catalog 82181
Revised 4-08
www.tycoelectronics.com

Dimensions are in inches and millimeters unless otherwise specified. Values in brackets are metric equivalents.

Dimensions are shown for reference purposes only. Specifications subject to change.

USA: 1-800-522-6752
Canada: 1-905-470-4425
Mexico: 01-800-733-8926
C. America: 52-55-1106-0803
South America: 55-11-2103-6000
Hong Kong: 852-2735-1628
Japan: 81-44-844-8013
UK: 44-8706-080-208

5.0 mm Power Key Connectors (5.0 PKC) (Wire-to-Board) (Continued)

Vertical Header Assembly (2 Rows)

Material and Finish

Housing—6/6 Nylon, glass filled

Tab Contacts—Copper Alloy, Tin plated

Related Product Data

Mating Plug Housings—page 139

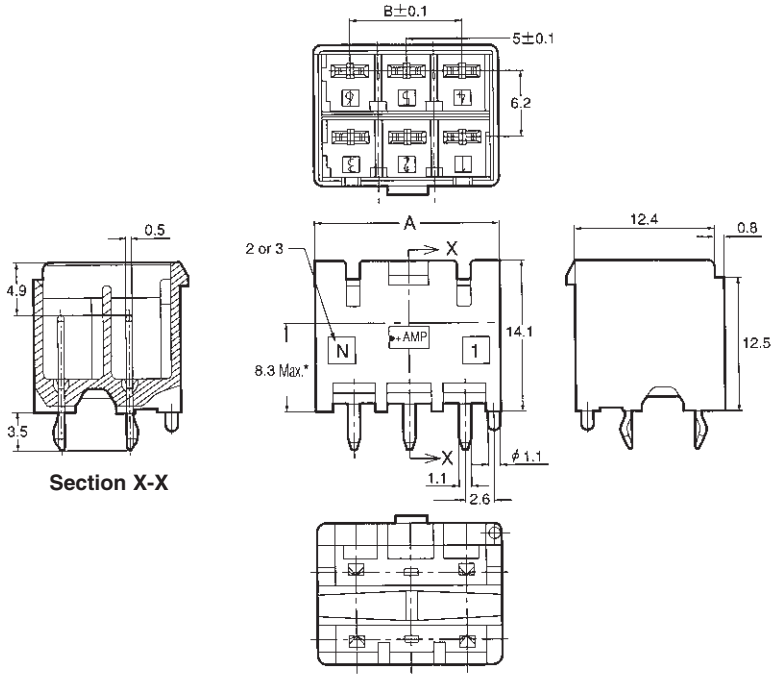

Section X-X

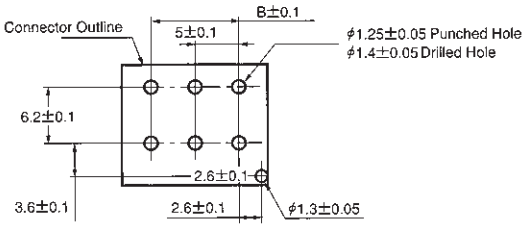

PC Board Layout

Type of Keying/Color

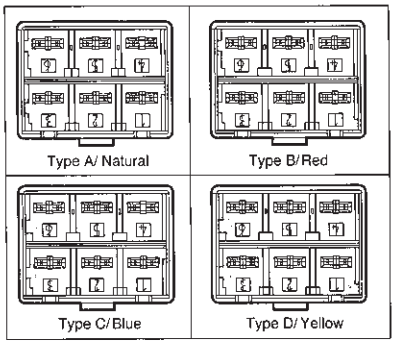

No. of Pos.	Dimensions A	Dimensions B	Loose Piece Tube (Qty.)	Vertical Header Assy. Part No. Type of Keying/Color: Type A Natural	Type B Red	Type C Blue	Type D Yellow	Mating Plug Housing Part Number
4	11.6	—	L.P	1376386-1	1-1376386-2	2-1376386-3	3-1376386-4	□-1376392-□
			Tube	1376442-1 (40)	1-1376442-2 (40)	2-1376442-3 (40)	3-1376442-4 (40)	
6	16.6	10	L.P	1376387-1	1-1376387-2	2-1376387-3	3-1376387-4	□-1376393-□
			Tube	1376443-1 (25)	1-1376443-2 (25)	2-1376443-3 (25)	3-1376443-4 (25)	

Note: Dimensions shown are metric.

Note: All part numbers are RoHS Compliant.

Catalog 82181
Revised 4-08
www.tycoelectronics.com

Dimensions are in inches and millimeters unless otherwise specified. Values in brackets are metric equivalents.

Dimensions are shown for reference purposes only. Specifications subject to change.

USA: 1-800-522-6752
Canada: 1-905-470-4425
Mexico: 01-800-733-8926
C. America: 52-55-1106-0803
South America: 55-11-2103-6000
Hong Kong: 852-2735-1628
Japan: 81-44-844-8013
UK: 44-8706-080-208

Engineering Notes

Catalog 82181
Revised 4-08

www.tycoelectronics.com

Dimensions are in inches and millimeters unless otherwise specified. Values in brackets are metric equivalents.

Dimensions are shown for reference purposes only. Specifications subject to change.

USA: 1-800-522-6752
Canada: 1-905-470-4425
Mexico: 01-800-733-8926
C. America: 52-55-1106-0803

South America: 55-11-2103-6000
Hong Kong: 852-2735-1628
Japan: 81-44-844-8013
UK: 44-8706-080-208

.093 [2.36] Commercial Pin and Socket Connectors

Product Facts

- Polarized
- Cavity identification
- Low contact-mating force
- Dual locking lances
- Detent and positive locking
- Contacts available in brass and phosphor bronze with tin and gold plating
- Panel mounting and free-hanging styles
- "F" crimp contacts
- Applicator and hand tool available
- Economical commercial-grade connectors
- Compatible with high-speed application machinery and competitive soft shells
- Wire range 24 to 14 AWG [0.2 to 2 mm²]
- Accepts wires with insulation diameters as large as .180 [4.57]
- Housings available in 1 to 15 positions
- .093 plug and receptacle housings accept pin or socket contacts. The preferred convention is to use socket contacts with receptacle housings
- Not for interrupting current
- Recognized under the Component Program of Underwriters Laboratories Inc., File No. E28476
- Certified by Canadian Standards Association, File No. LR 7189

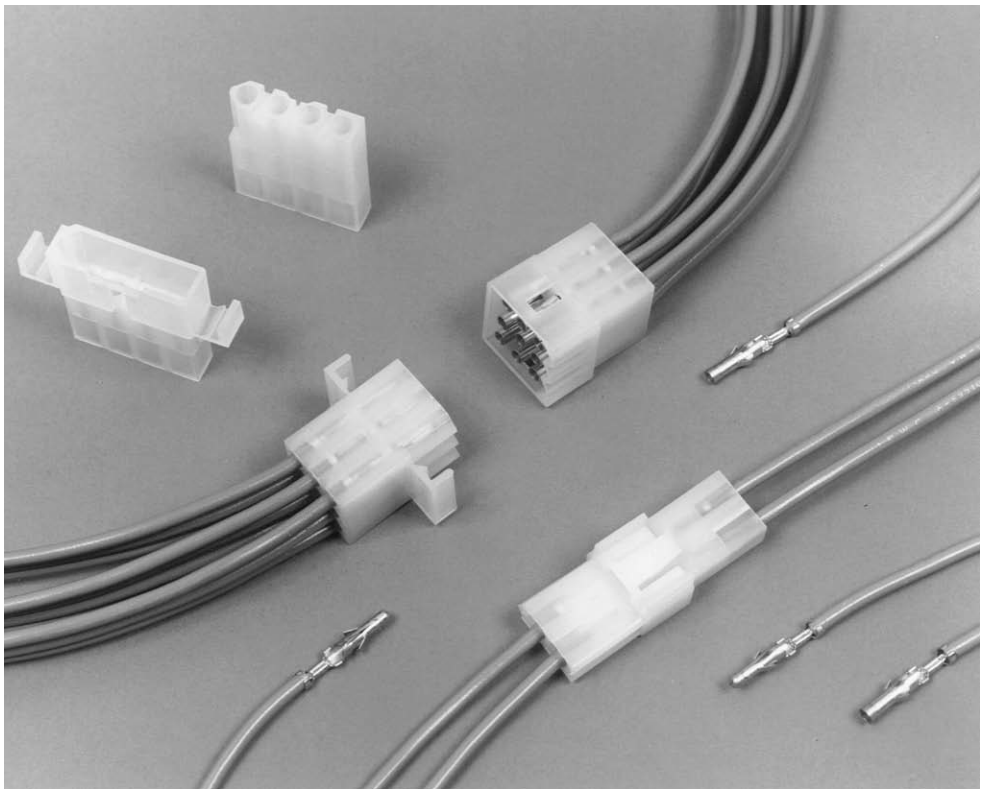

Performance Characteristics

The .093 Commercial Pin and Socket Connectors performance characteristics found on pages 143-144 are based on free-hanging and panel mount connectors, loaded with contacts crimped on stranded wire.

Thermal Shock— -55°C to +105°C

Temperature-Humidity Cycling—+25°C to +65°C at 90–95% RH

Corrosion—48 hr. at 5% salt concentration

Vibration—10-55-10 cycles per minute at .06 [1.52] total excursion

Physical Shock—18 shocks, 50 Gs sawtooth in 11 milliseconds

Durability—50 mating cycles

Dielectric Withstanding Voltage—1.0 kVAC

Insulation Resistance—1000 megohms min. initial

Voltage Rating—250 V AC or DC

Connector Mating—2.5 lb. [11.1 N] max. per contact

Connector Unmating—1.5 lb. [6.7 N] min. per contact

Contact Retention—10 lb. [44.5 N] min.

Technical Documents

Application Specification
114-49000 .093 Commercial Pin and Socket Connectors

Product Specification
108-1038 .093 Commercial Pin and Socket Connectors

Catalog 82181
Revised 4-08
www.tycoelectronics.com

Dimensions are in inches and millimeters unless otherwise specified. Values in brackets are metric equivalents.

Dimensions are shown for reference purposes only. Specifications subject to change.

USA: 1-800-522-6752
Canada: 1-905-470-4425
Mexico: 01-800-733-8926
C. America: 52-55-1106-0803
South America: 55-11-2103-6000
Hong Kong: 852-2735-1628
Japan: 81-44-844-8013
UK: 44-8706-080-208

.093 [2.36] Commercial Pin and Socket Connectors (Continued)

Performance Characteristics (continued)

Maximum Current—Maximum current rating of .093 Commercial Pin and Socket Connectors is limited by the maximum operating temperature of the housings which is 105°C including the temperature rise of the contacts which is a maximum of 30°C. There are several variables which have a direct effect on this maximum current-carrying capability for a given connector and must be considered for each application. These variables are:

Wire Size—Larger diameter wire will carry more current since it has less internal resistance to current flow and thus generates less heat. Longer wire lengths also enhance current-carrying capabilities since the wire conducts heat away from the connector.

Connector Size—In general, the more circuits in a connector, the less current can be carried.

Ambient Temperature—The higher the ambient temperature, the less current can be carried in any given connector.

Related Product Data

Product Specification — 108-1038

Current Rating Verification for 30°C Maximum Temperature Rise 100% Energized

Wire-to-Wire

.093 Commercial Pin and Socket Connectors — Calculated Current Table

Number of Circuits	Wire AWG					
	14	16	18	20	22	24
2	13.00	12.00	11.00	8.00	6.00	6.00
3	13.00	11.00	10.00	8.00	6.00	5.00
4 In-Line	11.00	10.00	9.00	7.00	5.00	4.00
4 Matrix	11.00	10.00	9.00	7.00	5.00	4.00
5	10.00	9.00	8.00	6.00	5.00	4.00
6	10.00	9.00	8.00	6.00	4.00	4.00
9	9.00	7.00	6.00	5.00	4.00	3.00
12	8.00	7.00	6.00	4.00	3.00	3.00
15	7.00	6.00	5.00	4.00	3.00	3.00

Values are based on initial Temperature Rise versus Current Testing and are intended to be a guide in the selection of a connector family. All applications should be tested by the end user. The values listed are per circuit for fully loaded housings being 100% energized. **Note:** All combinations were not tested and this chart contains interpolated and extrapolated values.

Minimum Wire Lengths for T-Rise vs. Current Testing

AWG	Min. Length (in.)	AWG	Min. Length (in.)
30	2.6	18	9.4
28	3.2	16	11.3
26	4.1	14	13.7
24	5.1	12	16.4
20	7.8	10	19.3

Note: If wire lengths used are less than those listed above, the current-carrying ability of the system will be reduced due to less heat being conducted away from the connector. The customer should fully test all applications.

Termination Resistance/Contact Crimp Tensile Force

Wire Size		Termination Resistance		Contact Crimp Tensile Force	
				Force (Min.)	
AWG	mm²	Test Current (Amps)	Resistance Milliohms (Max. Init.)	lbs.	N
24	0.2	2.0	4.0	8	35.6
22	0.3–0.4	3.0	4.0	10	44.5
20	0.5–0.6	4.5	4.0	15	66.7
18	0.8–0.9	6.0	3.5	25	111.2
16	1.25–1.4	8.0	3.5	25	111.2
14	2	10.0	3.0	30	133.4

Note: This is the total resistance between wire crimps of a mated pin and socket.

.093 [2.36] Commercial Pin and Socket Connectors (Continued)

Contacts

Pin Diameter .093 [2.36]

Material

.010 [0.25] Stock Thickness

Pin and socket contacts can be used in either plug or receptacle housings.

Related Product Data

Product Specification—108-1038

Application Specification 114-49000

Performance Characteristics—pages 143-144

Housings

.198 [5.03] Centerline—pages 146-147

.250 [6.35] Centerline—pages 148-149

Panel Cutouts

.198 [5.03] Centerline Housings—page 147

.250 [6.35] Centerline Housings—page 148

Technical Documents—pages 143 and 205-206

Application Tooling—pages 207-210

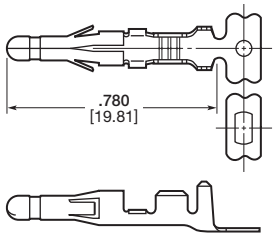

Pin

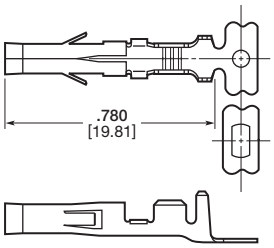

Socket

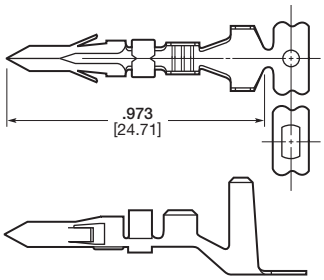

Pin
Part No. 770385-1

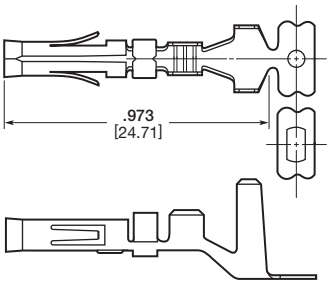

Socket
Part No. 770383-1

Wire Size AWG	Wire Size mm²	Ins. Dia.	Material & Finish	Contact Part Numbers Pin Strip Form	Pin Loose Piece	Socket Strip Form	Socket Loose Piece	HDM Applicator Part No.	Hand Tool Part No.
24–18	0.2–0.9	**.110** 2.79	Brass, Pre-tin	350418-1	770147-1	350417-1	770146-1	466656-1[5] 466656-2[5] 466656-3[5]	90872-1
			Brass, Gold[2]	—	—	350417-3[2]	770146-3[2]		
			Brass Select Gold[1]	350418-5[1]	770147-5[1]	350417-5[1]	770146-5[1]		
20–14	0.6–2	**.140** 3.56	Brass, Pre-tin	350416-1	770145-1	350415-1	770144-1	466878-1[5] 466878-2[5] 466878-3[5]	90871-1
			Brass, Select Gold[1]	350416-5[1]	770145-5[1]	350415-5[1]	770144-5[1]		
			Phos. Brz., Pre-tin	—	—	350415-6	770144-6		
		.180 4.57	Brass, Pre-tin	770530-1[4]	—	770529-1[4]	—	567337-3[6] 567337-4[6] 567337-6[6]	—
18–14 or 2 (18)	0.8–2 or 2 (0.8–0.9)	**.180** 4.57 (per wire)	Brass, Pre-tin	770385-1[3]	—	—	—	567273-2[7] 567273-3[7] 567273-4[7]	—
			Phos. Brz., Pre-tin	—	—	770383-1[3]	—		

[1]Select Gold—.000030 [.000762] min gold in mating area over .000050 [.00127] min nickel.
[2]Gold—.000030 [.000762] min gold in mating area, overall gold flash over .000050 [.00127] min nickel.
[3]These contacts have a .0125 [.318] stock thickness and accept two wires, each with maximum .180 [4.57] insulation diameters. They can be used only with the following housing part numbers: 770364-1, 770365-1, 770450-1, 770451-1, 770452-1, and 770453-1 (see page 143).
[4]Contact length is .875 [22. 23]
[5]HDM Applicator part number ending in -1 is used on AMPOMATOR CLS Machine with T or G Terminators, -2 is used on AMP-O-LECTRIC Model K Machine, -3 is used on AMP-O-LECTRIC Model G Machine. See pages 207-210 for further information.
[6]HDM Applicator part number ending in -3 is used on AMPOMATOR CLS Machine with T or G Terminators, -4 is used on AMP-O-LECTRIC Model K Machine, -6 is used on AMP-O-LECTRIC Model G Machine. See pages 207-210 for further information.
[7]HDM Applicator part number ending in -3 is used on AMPOMATOR CLS Machine with T or G Terminators, -2 is used on AMP-O-LECTRIC Model K Machine, -4 is used on AMP-O-LECTRIC Model G Machine. See pages 207-210 for further information.

Note: Phosphor bronze contacts should be used in high-temperature/humidity cycling applications.

Note: All part numbers are RoHS Compliant.

Contact Insertion Tool
(For Pins and Sockets)
Part No. 91002-1
IS 408-7347

Contact Extraction Tool
Part No. 318837-1
IS 408-4375

Dimensions are in inches and millimeters unless otherwise specified. Values in brackets are metric equivalents.

Dimensions are shown for reference purposes only. Specifications subject to change.

USA: 1-800-522-6752
Canada: 1-905-470-4425
Mexico: 01-800-733-8926
C. America: 52-55-1106-0803
South America: 55-11-2103-6000
Hong Kong: 852-2735-1628
Japan: 81-44-844-8013
UK: 44-8706-080-208

.093 [2.36] Commercial Pin and Socket Connectors (Continued)

Housings

Free-Hanging or Panel Mount

.198 [5.03] Centerline spacing

Material

Housing—Nylon, natural color
Flammability Rating—UL94-V-2

Related Product Data

Contacts—page 145

Product Specification—108-1038

1 Circuit

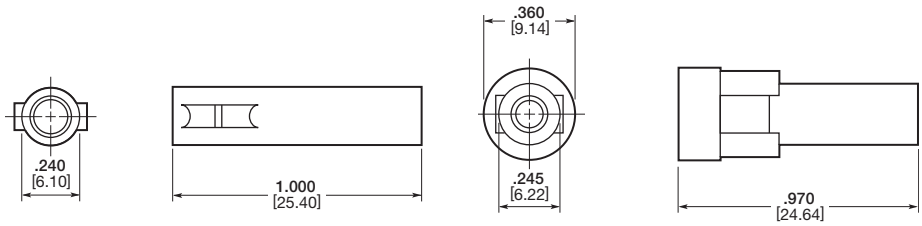

Receptacle Plug

2, 3, and 4 Circuit, In-Line

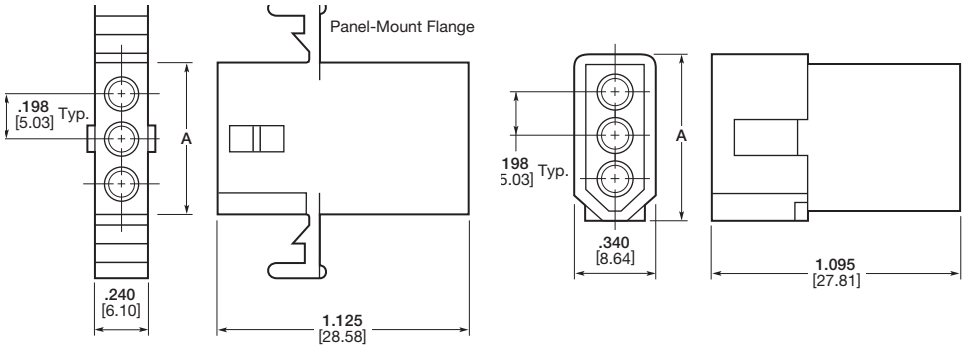

Receptacle Plug

No. of Circuits	A Dimension		Receptacle Part Numbers				Plug Part Numbers	
			Panel Mount		Free-Hanging			
	Receptacle	Plug	Without Detents	With Detents	Without Detents	With Detents	Panel Mount	Free-Hanging
1	—	—	—	—	—	770063-1	—	770064-1
2	**.540** 13.72	**.640** 16.26	—	770066-1[1,5]	—	770065-1[1,5] 770266[1,3,5]	770068-1[1]	770069-1[1]
3	**.670** 17.02	**.770** 19.56	—	770071-1	—	770070-1 770264-1[3]	770073-1	770074-1
4 (In-Line)	**.870** 22.10	**.970** 24.64	—	770076-1	—	770075-1	770077-1	770078-1
4 (Matrix)	**.443** 11.25	**.540** 13.71	—	—	—	770843-1	—	770842-1
5	**1.070** 27.18	**1.170** 29.72	—	—	—	770083-1 794015-1[3]	—	770084-1
6 (In-Line)	**1.268** 32.21	**1.378** 35.00	—	—	—	770782-1[4]	—	770892-1[4]
6 (Matrix)	**.435** 11.05	**.535** 13.59	770085-1	770087-1	770088-1	770086-1	770089-1	770090-1
9	**.670** 17.02	**.770** 19.56	770091-1	770093-1	770094-1	770092-1	770095-1[2] 770108-1	770096-1
12	**.870** 22.10	**.970** 24.64	770097-1	770099-1	770100-1	770098-1	770101-1	770102-1
15	**1.070** 27.18	**1.170** 29.72	770103-1	—	770105-1	—	770106-1	770107-1

[1].248 [6.30] centerline.
[2]Mounting ears at wire end.
[3]Tool removable.
[4]Positive lock.
[5]600 V AC or DC

Note: All part numbers are RoHS Compliant.

Catalog 82181
Revised 4-08
www.tycoelectronics.com

Dimensions are in inches and millimeters unless otherwise specified. Values in brackets are metric equivalents.

Dimensions are shown for reference purposes only. Specifications subject to change.

USA: 1-800-522-6752
Canada: 1-905-470-4425
Mexico: 01-800-733-8926
C. America: 52-55-1106-0803
South America: 55-11-2103-6000
Hong Kong: 852-2735-1628
Japan: 81-44-844-8013
UK: 44-8706-080-208

.093 [2.36] Commercial Pin and Socket Connectors (Continued)

Housings

Free-Hanging or Panel Mount

.198 [5.03] Centerline spacing

Material

Housing—Nylon, natural color

Flammability Rating—UL94V-2

Related Product Data

Contacts—page 145

Product Specification—108-1038

5 Circuit, In-Line

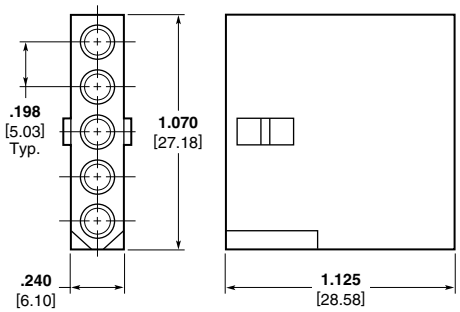

Receptacle (Free-Hanging)

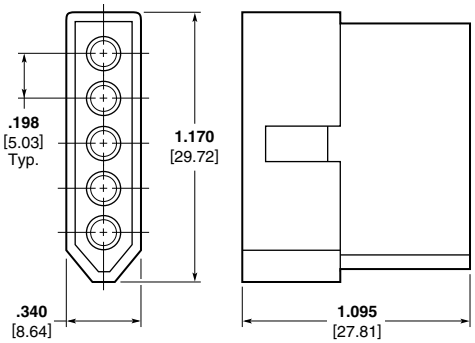

Plug (Free-Hanging)

4, 6, 9, 12, and 15 Circuit, Matrix

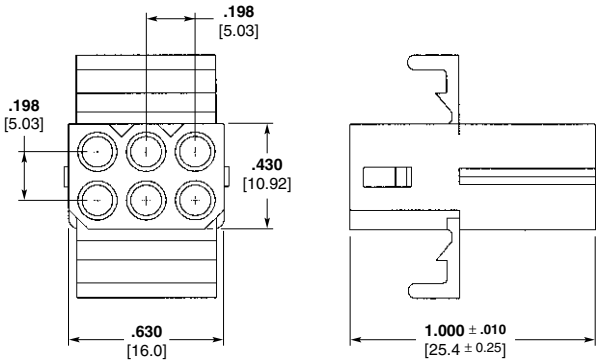

Receptacle

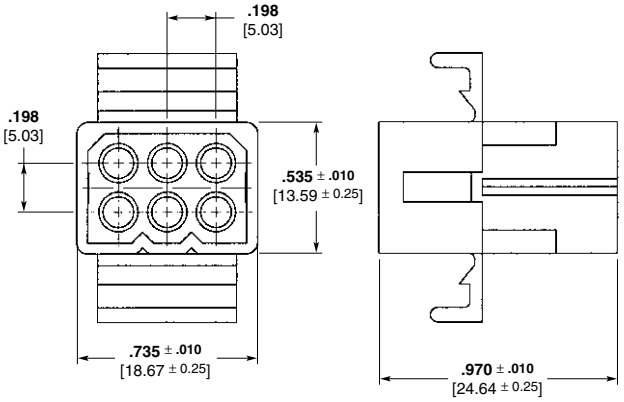

Plug

Recommended Panel Cutouts

Maximum panel thickness is .090 [2.29].

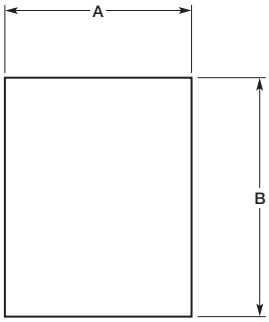

No. of Circuits	Panel Cutout Dimensions			
	Receptacle		Plug	
	A	B	A	B
2	**.312** 7.92	**.725** 18.42	**.375** 9.53	**.800** 20.32
3	**.312** 7.92	**.840** 21.34	**.375** 9.53	**.933** 23.70
4 (In-Line)	**.312** 7.92	**1.038** 26.37	**.375** 9.53	**1.131** 28.73
6	**.600** 15.24	**.718** 18.24	**.695** 17.65	**.750** 19.05
9	**.725** 18.42	**.828** 21.03	**.660** 16.76	**.937** 23.80
12	**.725** 18.42	**1.050** 26.67	**.760** 19.30	**1.155** 29.34
15	**.655** 16.64	**1.240** 31.50	**.760** 19.30	**1.343** 34.11

Note: The panel should be punched so that the housing enters in the same direction as the punch.

Catalog 82181
Revised 4-08
www.tycoelectronics.com

Dimensions are in inches and millimeters unless otherwise specified. Values in brackets are metric equivalents.

Dimensions are shown for reference purposes only. Specifications subject to change.

USA: 1-800-522-6752
Canada: 1-905-470-4425
Mexico: 01-800-733-8926
C. America: 52-55-1106-0803
South America: 55-11-2103-6000
Hong Kong: 852-2735-1628
Japan: 81-44-844-8013
UK: 44-8706-080-208

.093 [2.36] Commercial Pin and Socket Connectors (Continued)

Housings

Free-Hanging or Panel Mount

.250 [6.35] Centerline spacing

Material

Housing—Nylon, natural color
Flammability Rating—UL94V-2
Voltage Rating—600 V AC or DC

Related Product Data

Contacts—page 145

Product Specification—108-1038

3 Circuit, In-Line

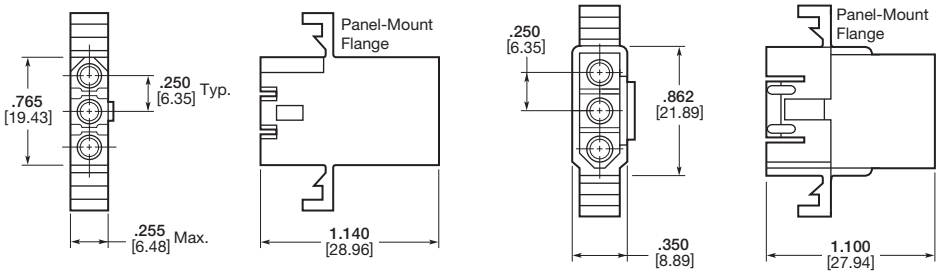

Receptacle Plug

4 Circuit, In-Line

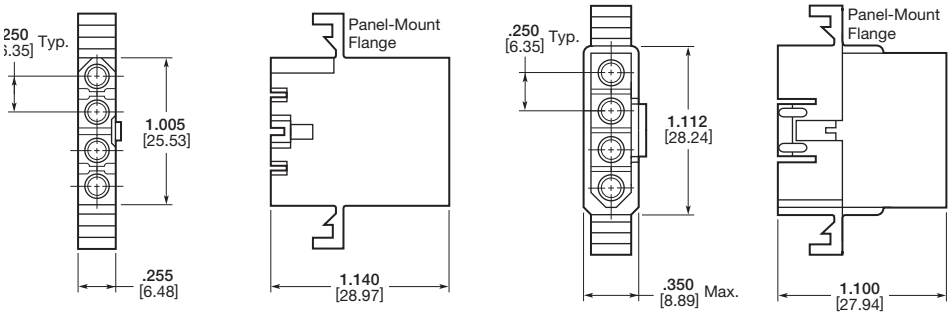

Receptacle Plug

6 Circuit, Matrix

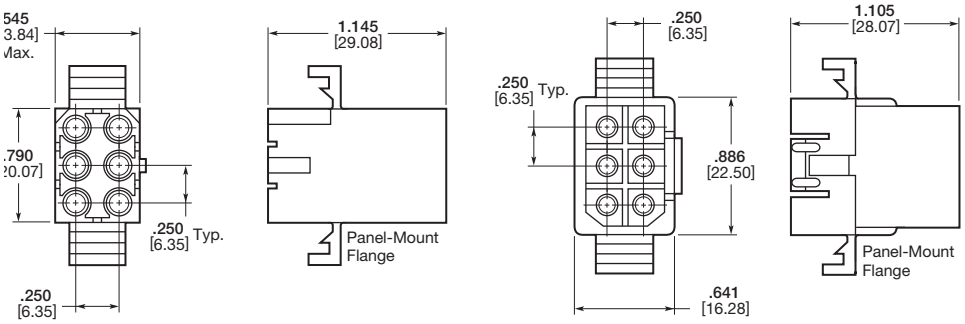

Receptacle Plug

Recommended Panel Cutouts

Maximum panel thickness is .062 [1.57].

Note: The panel should be punched so that the housing enters in the same direction as the punch.

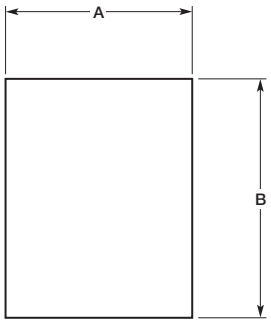

No. of Circuits	Receptacle Part Numbers		Plug Part Numbers	
	Panel Mount	Free-Hanging	Panel Mount	Free-Hanging
3	770269-1 770771-1[1]	770339-1	770338-1	770276-1
4	770329-1	770337-1	770330-1	770336-1
6	770372-1	770360-1	770373-1	770361-1

[1]Pre-bent mounting ears.

No. of Circuits	Panel Cutout Dimensions			
	Receptacle		Plug	
	A	B	A	B
3	**.310** 7.87	**.920** 23.37	**.365** 9.27	**1.022** 25.96
4	**.310** 7.87	**1.168** 29.67	**.365** 9.27	**1.270** 32.26
6	**.608** 15.44	**.946** 24.03	**.658** 16.71	**1.048** 26.62

Note: All part numbers are RoHS Compliant.

Catalog 82181
Revised 4-08
www.tycoelectronics.com

Dimensions are in inches and millimeters unless otherwise specified. Values in brackets are metric equivalents.

Dimensions are shown for reference purposes only. Specifications subject to change.

USA: 1-800-522-6752
Canada: 1-905-470-4425
Mexico: 01-800-733-8926
C. America: 52-55-1106-0803
South America: 55-11-2103-6000
Hong Kong: 852-2735-1628
Japan: 81-44-844-8013
UK: 44-8706-080-208

.093 [2.36] Commercial Pin and Socket Connectors (Continued)

Housings

Free-Hanging or Panel Mount

.250 [6.35] Centerline spacing

Material

Housing—Nylon, natural color
Flammability Rating—UL94V-2
Voltage Rating—600 V AC or DC

Related Product Data

Contacts—page 145

Product Specification—108-1038

Dual Wire

2 Circuit, In-Line

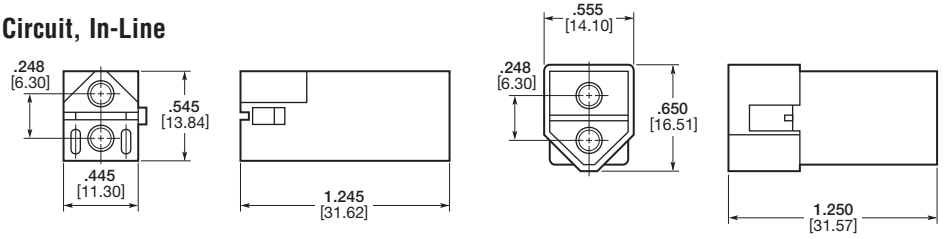

Receptacle Plug

3 Circuit, In-Line

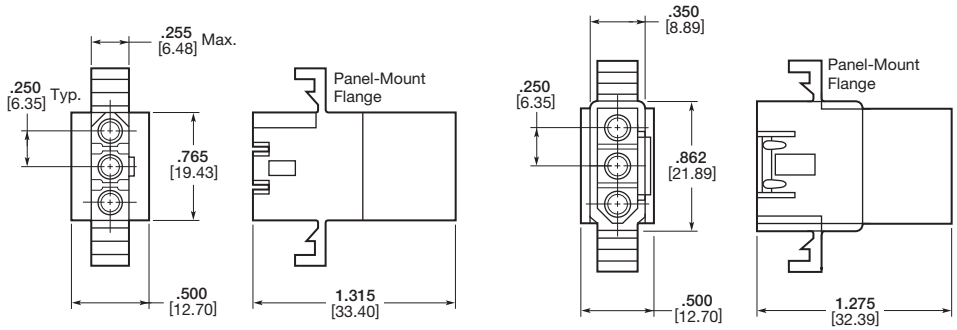

Receptacle Plug

No. of Circuits	Receptacle Part Numbers		Plug Part Numbers	
	Panel Mount	Free-Hanging	Panel Mount	Free-Hanging
2	—	770364-1[1]	—	770365-1[1]
3	770453-1[2]	770451-1	770452-1[2]	770450-1

[1].248 [6.30] centerline.
[2]See panel cutout dimensions on page 58.

Positive Lock

2, 3 and 4 Circuit, In-Line

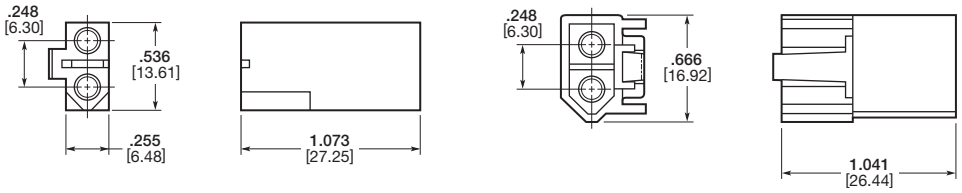

Receptacle Plug

No. of Circuits	Receptacle Part Numbers	Plug Part Numbers
	Free-Hanging	Free-Hanging
2	770424-1[1]	770425-1[1]
3	770785-1	770783-1
4	770784-1	770810-1

[1].248 [6.30] centerline.

Note: All part numbers are RoHS Compliant.

Catalog 82181
Revised 4-08
www.tycoelectronics.com

Dimensions are in inches and millimeters unless otherwise specified. Values in brackets are metric equivalents.

Dimensions are shown for reference purposes only. Specifications subject to change.

USA: 1-800-522-6752
Canada: 1-905-470-4425
Mexico: 01-800-733-8926
C. America: 52-55-1106-0803
South America: 55-11-2103-6000
Hong Kong: 852-2735-1628
Japan: 81-44-844-8013
UK: 44-8706-080-208

Engineering Notes

Catalog 82181
Revised 4-08

www.tycoelectronics.com

Dimensions are in inches and millimeters unless otherwise specified. Values in brackets are metric equivalents.

Dimensions are shown for reference purposes only. Specifications subject to change.

USA: 1-800-522-6752
Canada: 1-905-470-4425
Mexico: 01-800-733-8926
C. America: 52-55-1106-0803

South America: 55-11-2103-6000
Hong Kong: 852-2735-1628
Japan: 81-44-844-8013
UK: 44-8706-080-208

Commercial MATE-N-LOK Connectors

Product Facts

- Fully polarized nylon housings
- Easy cavity identification
- Locking devices are integral part of design. Connector halves will hold together under severe conditions of vibration and shock
- Built-in contact stabilization and self-aligning features
- Hot side egg-crate design for safety
- Precision molded to exacting tolerances
- Contacts accept a wire size range of 30-14 AWG [.05-2.0 mm²]
- Keying plug available
- "Clean" design contact—no sharp projections to impede insertion or damage housings
- Low insertion/extraction forces
- Contacts available in pre-tin or gold over nickel plated to fit the application requirements
- Wire-to-PC Board capability using pin or socket headers
- Solderability—Headers meet MIL-STD 202 method 208
- Four circuit PC Board-to-PC Board capability available by mating vertical socket header with either vertical, right-angle or surface mount pin header
- Four circuit insulation displacement connector (IDC) available
- Ultraviolet (UV) stable housings available in 1, 2 and 3 circuit
- Not for interrupting current
- Recognized under the Component Program of Underwriters Laboratories Inc., File No. E28476
- Certified by Canadian Standards Association, File No. LR 7189A

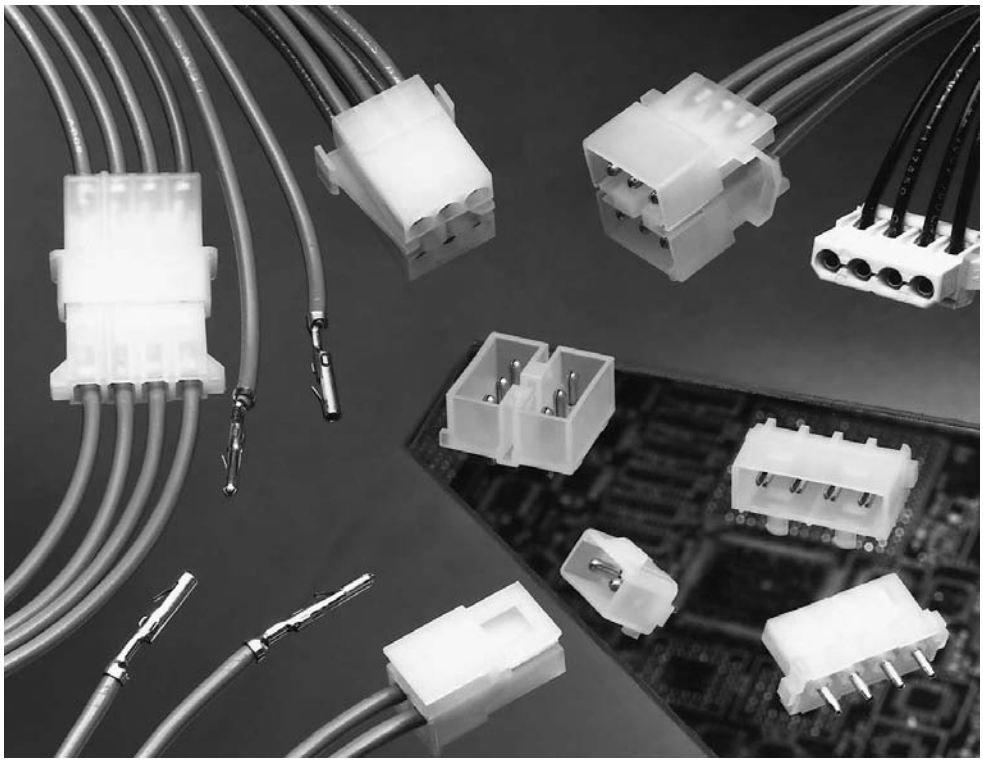

Performance Characteristics

The Commercial MATE-N-LOK Connector performance characteristics found on pages 151-152 are based on free-hanging and panel mount connectors, loaded with contacts crimped on stranded wire.

Dielectric Withstanding Voltage—1.5 KVAC between adjacent circuits

Insulation Resistance—500 megohms minimum initial between adjacent circuits

Voltage Rating—250 V AC or DC

Connector Mating—4 lb. max. per circuit

Connector Unmating—0.7 lb. min. per circuit

Contact Retention—15 lb. min. per contact

Durability—50 cycles, mating and unmating

Technical Documents

Product Specifications

108-1000 Commercial MATE-N-LOK Connectors
108-1077 Commercial MATE-N-LOK PC Board Headers
108-49000 IDC Connectors

Application Specifications

114-1012 Commercial MATE-N-LOK Contacts
114-49001 IDC Connectors

Instruction Sheets

408-7209, 408-7166, 408-7200, 408-7201, 408-7215, 408-3186, 408-7300

Catalog 82181
Revised 4-08
www.tycoelectronics.com

Dimensions are in inches and millimeters unless otherwise specified. Values in brackets are metric equivalents.

Dimensions are shown for reference purposes only. Specifications subject to change.

USA: 1-800-522-6752
Canada: 1-905-470-4425
Mexico: 01-800-733-8926
C. America: 52-55-1106-0803
South America: 55-11-2103-6000
Hong Kong: 852-2735-1628
Japan: 81-44-844-8013
UK: 44-8706-080-208

Commercial MATE-N-LOK Connectors (Continued)

Performance Characteristics (Continued)

Maximum Current—Maximum current rating of Commercial MATE-N-LOK connectors is limited by the maximum operating temperature of the housings which is 105°C including the temperature rise of the contacts which is a maximum of 30°C. There are several variables which have a direct effect on this maximum current-carrying capability for a given connector and must be considered for each application. These variables are:

Wire Size—Larger diameter wire will carry more current since it has less internal resistance to current flow and thus generates less heat. Longer wire lengths also enhance current-carrying capabilities since the wire conducts heat away from the connector.

Connector Size—In general, the more circuits in a connector, the less current can be carried.

Ambient Temperature—The higher the ambient temperature, the less current can be carried in any given connector.

Printed Wiring Board Conductor Size—The finished trace conductor width and thickness should be maximized to allow for the greatest current-carrying capacity and heat dissipation.

Commercial MATE-N-LOK connectors also will withstand the following tests:

Vibration—10-55-10 cycles per minute at .06 inch total excursion

Physical Shock—18 drops, 50 G sawtooth at 11 milliseconds

Housing Panel Mount Retention—
40 lb. min. 3 and 4 circuit
65 lb. min. 6, 9, 12, and 15 circuit

Housing Lock Strength with Positive Locking Devices Engaged—
25 lb. min.

Thermal Shock— -55°C to +85°C

Temperature-Humidity Cycling—
25°C to 65°C at 95 RH

Corrosion—48 hr. at 5% salt concentration

Related Product Data

Product Specifications

108-1000 Commercial MATE-N-LOK Connectors

108-1077 Commercial MATE-N-LOK PC Board Headers

Current Rating Verification for 30°C Maximum Temperature Rise 100% Energized

Wire-to-Wire

Motor Mount Calculated Current Table

Number of Circuits	Wire Gauge						
	14	16	18	20	22	24	30
6	13.00	10.50	9.50	7.50	6.00	5.00	2.50
8	12.00	9.50	8.50	7.00	5.50	4.50	2.50
10	11.00	9.00	8.00	6.50	5.00	4.50	2.00
12	10.50	8.50	7.50	6.00	5.00	4.00	2.00
16	9.50	8.00	7.00	5.50	4.50	3.50	2.00

Values are based on initial Temperature Rise versus Current Testing and are intended to be a guide in the selection of a connector family. All applications should be tested by the end user. The values listed are per circuit for fully loaded housings being 100% energized. **Note:** All combinations were not tested, and this chart contains interpolated and extrapolated values.

Calculated Current Table

Number of Circuits	Wire Gauge						
	14	16	18	20	22	24	30
1	19.00	15.50	14.00	11.00	9.00	7.50	4.00
2	18.00	14.50	13.00	10.50	8.50	7.00	4.00
3	16.00	13.00	12.00	9.50	7.50	6.50	3.50
4	15.00	12.50	11.00	9.00	7.00	6.00	3.00
6 Matrix	13.00	10.50	9.50	7.50	6.00	5.00	3.00
8	12.50	10.50	9.00	7.50	6.00	5.00	2.50
9	11.00	9.00	8.00	6.50	5.50	4.50	2.50
10	12.00	9.50	8.50	7.00	5.50	4.50	2.50
12	10.50	8.50	7.50	6.00	5.00	4.00	2.00
15	9.50	8.00	7.00	5.50	4.50	4.00	2.00

Values are based on initial Temperature Rise versus Current Testing and are intended to be a guide in the selection of a connector family. All applications should be tested by the end user. The values listed are per circuit for fully loaded housings being 100% energized. **Note:** All combinations were not tested, and this chart contains interpolated and extrapolated values.

Wire-to-Board

Due to the vast differences in trace geometry and printed circuit board configurations, we are unable to provide a separate current carrying chart for our printed circuit board header products. However, the above Wire-to-Wire charts may be used as a guideline for headers if the trace width and thickness is equal to the listed wire gauge. For vertical headers, only 95% of the Wire-to-Wire value should be used. For right-angle headers, only 75% of the Wire-to-Wire value should be used. The chart values are only a tool for connector selection and will require the customer to fully test their application.

Minimum Wire Lengths for T-Rise vs. Current Testing

AWG	Min. Length (in.)	AWG	Min. Length (in.)
30	2.6	18	9.4
28	3.2	16	11.3
26	4.1	14	13.7
24	5.1	12	16.4
20	7.8	10	19.3

Note: If wire lengths used are less than those listed above, the current carrying ability of the system will be reduced due to less heat being conducted away from the connector. The customer should fully test all applications.

Termination Resistance/Contact Crimp Tensile Force

Wire Size		Termination Resistance		Contact Crimp Tensile Force	
AWG	mm²	Test Current (Amps)	Resistance Milliohms (Max. Init.)	Force (Min.) lbs.	Force (Min.) N
30	.05	.50	4.00	2	9
28	.08	.75	3.50	3	13
26	.12	1.00	3.50	7	31
24	.2	1.5	3.50	10	44
22	.3	3	3.50	15	67
20	.5	4.5	3.00	20	89
18	.8	6	3.00	30	133
16	1.2	8	2.75	30	133
14	2.0	10	2.75	35	156

Note: This is the total resistance between wire crimps of a mated pin and socket.

Dimensions are in inches and millimeters unless otherwise specified. Values in brackets are metric equivalents.

Dimensions are shown for reference purposes only. Specifications subject to change.

USA: 1-800-522-6752
Canada: 1-905-470-4425
Mexico: 01-800-733-8926
C. America: 52-55-1106-0803
South America: 55-11-2103-6000
Hong Kong: 852-2735-1628
Japan: 81-44-844-8013
UK: 44-8706-080-208

Commercial MATE-N-LOK Connectors (Continued)

Commercial MATE-N-LOK Connector Mating Combinations

Connector Part Number					Mating Connector Part Number							
							PC Board Headers					
								Vertical Pin			Vertical Socket	
Number of Circuits	Flammability Rating	Style	Housing Type	Connector Part No.	Housing Part No.	Housing Type	Plating	Standard Tail	Long Tail	Right-Angle Pin	Standard Tail	Long Tail
1	UL94V-2	In-Line	Socket: FH	1-480349-0	1-480350-0	Pin: FH	—	—	—	—	—	—
					1-480351-0	Pin: FH Positive Lock	—	—	—	—	—	—
			Socket: FH UV Stable	1-480400-0	1-480401-1	Pin: FH UV Stable	—	—	—	—	—	—
2	UL94V-2	In-Line	Socket: FH	1-480318-0	1-480319-0	Pin: FH	Pre-tin	350209-1	350422-1	794120-1	—	—
							Duplex[1]	1586512-2	—	—	—	—
			Socket: FH UV Stable	1-480393-1	1-480498-1	Pin: FH UV Stable	—	—	—	—	—	—
			Socket: FH Positive Lock	1-480720-0	794012-1	Pin: FH Positive Lock	Pre-tin	350539-1	350540-1	—	—	—
							Duplex[1]	1586530-2	—	—	—	—
3	UL94V-2	In-Line	Socket: FH	1-480303-0	1-480305-0	Pin: FH	Pre-tin	350210-1	350423-1	643488-1	—	—
							Duplex[1]	1586514-2	—	—	—	—
			Socket: PM	1-480304-0			—	—	—	—	—	—
			Socket: FH Positive Lock	1-480721-0	—	—	Pre-tin	350541-1	350542-1	—	—	—
							Duplex[1]	1586532-2	—	—	—	—
			Socket: FH UV Stable	1-480388-0	1-480387-0	Pin: FH UV Stable	—	—	—	—	—	—
4	See next page for 4 position mating combinations											
6	UL94V-2	Matrix	Socket: FH Positive Lock	1-480270-0	1-480340-0	Pin: FH Positive Lock	Pre-tin	1-380999-0	350425-1	—	—	—
					1-480271-0	Pin: MM Positive Lock	Duplex[1]	2-1586546-0	1586526-2	—	—	—
			Socket: PM Positive Lock	1-480273-0	1-480276-0	Pin: PM Positive Lock	Pre-tin	—	—	—	—	—
							Duplex[1]	—	—	—	—	—
			Pin: PM Positive Lock	1-480276-0	1-480273-0	Socket: PM Positive Lock	Pre-tin	—	—	—	350641-1	350576-1
							Duplex[1]	—	—	—	—	—
8	UL94V-2	Dual Row	Socket: FH Positive Lock	1-480283-0	1-480345-0	Pin: FH Positive Lock	Pre-tin	350212-1	350426-1	—	—	—
					1-480284-0	Pin: MM Positive Lock	Duplex[1]	1586518-2	1586528-2	—	—	—
9	UL94V-2	Matrix	Pin: PM Positive Lock	1-480277-0	1-480274-0	Socket: PM Positive Lock	Pre-tin	—	—	—	350642-1	350577-1
							Duplex[1]	—	—	—	—	—
10	UL94V-2	Dual Row	Socket: FH Positive Lock	1-480285-0	1-480339-0	Pin: FH Positive Lock	Pre-tin	1-380991-0	350219-1	—	—	—
					1-480286-0	Pin: MM Positive Lock	Duplex[1]	2-1586544-0	—	—	—	—
12	UL94V-2	Dual Row	Socket: MM Positive Lock	1-480287-0	1-480288-0	Pin: MM Positive Lock	Pre-tin	350213-1	350220-1	—	—	—
							Duplex[1]	1586520-2	1586524-2	—	—	—
		Matrix	Pin: PM Positive Lock	1-480278-0	1-480275-0	Socket: PM Positive Lock	Pre-tin	—	—	—	350643-1	350578-1
							Duplex[1]	—	—	—	—	—
15	UL94V-2	Matrix	Pin: PM Positive Lock	1-480324-0	1-480323-0	Socket: PM Positive Lock	Pre-tin	—	—	—	350644-1	350579-1
							Duplex[1]	—	—	—	—	—
16	UL94V-2	Dual Row	Socket: MM Positive Lock	1-480438-0	1-480439-0	Pin: MM Positive Lock	Pre-tin	350214-1	350427-1	—	—	—
							Duplex[1]	1586522-2	1586529-2	—	—	—

FH: Free-Hanging **PM: Panel Mount** **MM: Motor Mount**

[1]Duplex Finish — Plated with .000030 [.000762] min. gold in mating area, matte tin on solder tail end over .000050 [.00127] min. nickel underplate on entire contact.

Note: All part numbers are RoHS Compliant.

Dimensions are in inches and millimeters unless otherwise specified. Values in brackets are metric equivalents.

Dimensions are shown for reference purposes only. Specifications subject to change.

USA: 1-800-522-6752
Canada: 1-905-470-4425
Mexico: 01-800-733-8926
C. America: 52-55-1106-0803
South America: 55-11-2103-6000
Hong Kong: 852-2735-1628
Japan: 81-44-844-8013
UK: 44-8706-080-208

Commercial MATE-N-LOK Connectors (Continued)

Commercial MATE-N-LOK 4 Position In-Line Mating Combinations (**Note:** These connectors are used by the disk drive industry.)

Connector Part Number			Mating Connector Part Number											
					Socket Connectors				PC Board Pin Headers					
									Vertical			Right-Angle		
Flammability Rating	Connector Type	Connector Part No.	Housing Part No.	Housing Type	Plating	Insulation Displacement Connector	AWG	PC Board Vertical Socket Header	Standard Tail	Long Tail	Surface Mount	Standard	W/Fixed Belt	W/Fixed Belt Reverse Pol.
UL94V-2	Socket Housing Positive Lock	1-480772-0	—	—	Pre-tin	—	—	—	350543-1	350544-1	—	—	—	—
					Duplex[1]	—	—	—	1586534-2	1586536-2	—	—	—	—
	Socket Housing Detent Lock	1-480424-0	1-480426-0	Pin	Pre-tin	—	—	—	350211-1 770328-1[3]	350424-1	770829-1	641737-1 770846-1	174804-1	174552-1
					Duplex[1]	—	—	—	1586515-2	1586525-2	—	—	—	—
	Pin Housing Detent Lock	1-480426-0	1-480424-0	Socket	Pre-tin	770156-2	22	770997-1 794287-1[2]	—	—	—	—	—	—
						770156-3	18							
						770156-4	20							
			1-480425-0	Socket PM		770156-5	16							
					Duplex[1]	770526-1	18	—	—	—	—	—	—	—
	Pin Housing Detent Lock High Temp	3-480426-0	3-480425-0	Socket High Temp	—	—	—	—	—	—	—	—	—	—
	Socket Header	770997-1 794287-1[2]	1-480426-0	Pin	Pre-tin	—	—	—	350211-1	350424-1	770829-1	641737-1 770846-1	174804-1	174552-1
	Insulation Displacement Connector (IDC)	770156-2 770156-3 770156-4 770156-5	1-480426-0	Pin	Pre-tin	—	—	—	350211-1	350424-1	770829-1	641737-1 770846-1	174804-1	174552-1
		770526-1			Duplex[1]	—	—	—	1586515-2	1586525-2	—	—	—	—
UL94V-0	Socket Housing	770827-1	794132-1	Pin	Pre-tin	—	—	—	—	—	—	1-641737-1	—	—
	Insulation Displacement Connector (IDC)	794036-1 794036-2 794036-3 794036-4	794132-1	—	Pre-tin	—	—	—	—	—	—	1-641737-1	—	—
	Right-Angle Pin Header	1-641737-1	770827-1	Socket	Pre-tin	794036-1	18	—	794236-1	—	—	—	—	—
						794036-2	20							
						794036-3	22							
						794036-4	16							

PM: Panel Mount
[1]Duplex Finish—Plated with .000030 [.000762] min. gold in matting area, matte tin on solder tail end over .000050 [.00127] min. nickel underplate on entire contact.
[2]Surface Mount Compatible.
[3]With Drainholes

Note: All part numbers are RoHS Compliant.

Dimensions are in inches and millimeters unless otherwise specified. Values in brackets are metric equivalents.

Dimensions are shown for reference purposes only. Specifications subject to change.

USA: 1-800-522-6752
Canada: 1-905-470-4425
Mexico: 01-800-733-8926
C. America: 52-55-1106-0803
South America: 55-11-2103-6000
Hong Kong: 852-2735-1628
Japan: 81-44-844-8013
UK: 44-8706-080-208

Commercial MATE-N-LOK Connectors (Continued)

Contacts

Pin diameter .084 [2.13]
Stock thickness .012 [.305]
These contacts are to be used in Commercial MATE-N-LOK housings **only**.

Related Product Data

Product Specification
108-1000 Commercial MATE-N-LOK Connectors

Application Specification
114-1012 Commercial MATE-N-LOK Contacts

Performance Characteristics—pages 151-152
Housings—pages 157-159
Technical Documents—pages 151 and 205-206
Application Tooling—pages 207-210

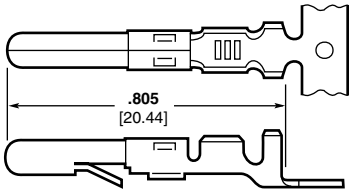

Pin

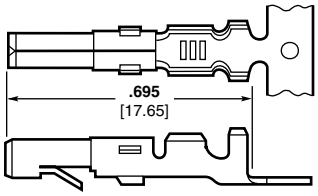

Socket

Wire Size Range AWG [mm²]	Ins. Dia. Range	Material & Finish	Contact Part Numbers: Pin, Strip Form	Pin, Loose Piece	Socket, Strip Form	Socket, Loose Piece	HDM Applicator Part No.	Hand Tool Part No.
30-22 [.05-.3]	**.040-.075** 1.02-1.91	Brass, Pre-tin	350079-1	61174-1	350078-1	61173-1	466426-1[3] 466426-2[3] 466426-3[3]	91515-1
		Phos. Brz., Pre-tin	350079-4	—	350078-4	61173-4		
		Brass, Gold[1]	350079-5	61174-5	350078-5	61173-5		
24-18 [.2-.8]	**.060-.100** 1.52-2.54	Brass, Pre-tin	61116-1	60618-1	61314-1	60617-1	466320-1[3] 466320-2[3] 466320-4[3]	91512-1 91528-1[4]
		Phos. Brz., Pre-tin	61116-4	60618-4	61314-4	60617-4		
		Brass, Gold[1]	61116-5	60618-5	61314-5	60617-5		
		Phos. Brz., Select Gold[2]	61116-6	60618-6	61314-6	60617-6		
		Brass, Select Gold[2]	61116-7	—	61314-7	—		
20-14 [.5-2.0]	**.100-.130** 2.54-3.30	Brass, Pre-tin	61118-1	60620-1	61117-1	60619-1	687763-1[3] 687763-2[3] 687763-6[3]	91504-1
		Phos. Brz., Pre-tin	61118-4	60620-4	61117-4	60619-4		
		Brass, Gold[1]	61118-5	60620-5	61117-5	60619-5		
		Phos. Brz., Gold[1]	61118-6	—	61117-6	60619-7		
		Brass, Select Gold[2]	61118-7	—	61117-7	—		
(2) 18 [.8] or (1) 18 [.8] and (1) 16 [1.2]	(2) **.115 Max.** 2.92 (stacked)	Brass, Pre-tin	350558-1	350639-1	350557-1	—	687898-1[3] 687898-2[3] 687898-4[3]	91504-1
		Phos. Brz., Pre-tin	350558-4	—	350557-4	350638-4		

[1]Gold Finish — Plated with .000030 [.000762] min. gold in mating area and inside wire barrel over .000050 [.00127] min. nickel underplate on entire contact.
[2]Select Gold Finish — Plated with .000030 [.000762] min. gold in mating area over .000050 [.00127] min. nickel underplate on entire contact.
[3]HDM Applicator part number ending in -1 is used on AMPOMATOR CLS Machine with T or G Terminators, -2 is used on AMP-O-LECTRIC Model K Machine; -3, -4, or -6 is used on AMP-O-LECTRIC Model G Machine. See pages 207-210 for further information.
[4]Use Hand Tool No. 91528-1 for .043-.075 [1.09-1.90] insulation diameter.

Notes:
1. Extraction Tools: Pins — No. **1-305183-1** (IS 408-7158); Sockets — No. **1-305183-2** (IS 408-7158); Pins and Sockets — No. **465644-1** (IS 408-7211)
2. Insertion Tools: No. **455830-1** (IS 408-7984)

Commoning Tabs

Material and Finish

Brass, tin plated
Stock thickness .008 [.203]

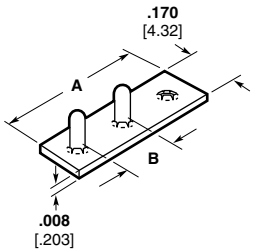

Number of Holes	Dimensions A	Dimensions B	Part Number
2	**.377** 9.58	**.203** 5.16	60843-1
2	**.355** 9.02	**.195** 4.95	350444-1
3	**.579** 14.71	**.203** 5.16	60842-1
3	**.550** 13.97	**.195** 4.95	350444-2

Note: Commoning tabs are designed to be used with pin housings.

Note: All part numbers are RoHS Compliant.

Catalog 82181
Revised 4-08
www.tycoelectronics.com

Dimensions are in inches and millimeters unless otherwise specified. Values in brackets are metric equivalents.

Dimensions are shown for reference purposes only. Specifications subject to change.

USA: 1-800-522-6752
Canada: 1-905-470-4425
Mexico: 01-800-733-8926
C. America: 52-55-1106-0803
South America: 55-11-2103-6000
Hong Kong: 852-2735-1628
Japan: 81-44-844-8013
UK: 44-8706-080-208

Commercial MATE-N-LOK Connectors (Continued)

Contacts

Pin diameter .084 [2.13]

Stock thickness .012 [.305]

These contacts are to be used in Commercial MATE-N-LOK housings **only**.

Related Product Data

Product Specification

108-1000 Commercial MATE-N-LOK Connectors

Application Specification

114-1012 Commercial MATE-N-LOK Contacts

Performance Characteristics—pages 151-152
Housings—pages 157-159
Technical Documents—pages 151 and 205-206
Application Tooling—pages 207-210

PC Board Contacts

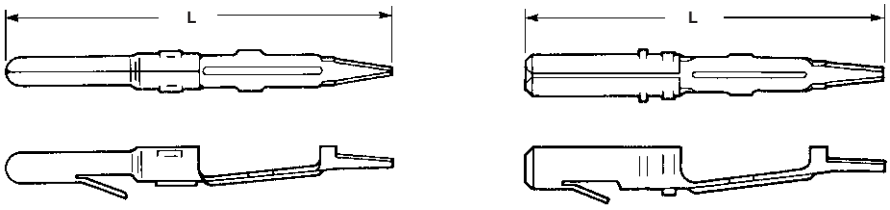

Pin Socket

Type of Contact	L Dim. Pin	L Dim. Socket	Material & Finish	Part Numbers Pin Loose Piece	Part Numbers Socket Loose Piece
PC Board	**1.110** [28.19]	**1.010** [25.65]	Phos. Brz., Pre-tin	61518-1[1]	61320-1[1]
	1.210 [30.73]	**1.110** [28.19]	Phos. Brz., Pre-tin	350074-1[2]	350073-1[2]

[1]For .062 [1.57] max. board thickness — Board hole size .057 [1.45]
[2]For .125 [3.14] max. board thickness — Board hole size .057 [1.45]

Grounding Pin

(.095 [2.41] longer than standard pin)

(Mate first, break last, not for interrupting current)

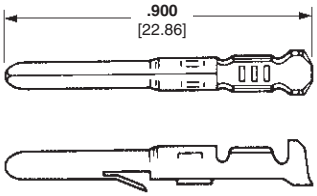

Wire Size Range AWG [mm²]	Ins. Dia. Range	Material & Finish	Contact Part Numbers Strip Form	Contact Part Numbers Loose Piece	HDM Applicator Part No.	Hand Tool Part No.
24-18 [.2-.8]	**.060-.100** 1.52-2.54	Brass, Pre-tin	61527-2	—	466320-1[1] 466320-2[1] 466320-4[1]	91512-1

[1]HDM Applicator part number ending in -1 is used on AMPOMATOR CLS Machine with T or G Terminators, -2 is used on AMP-O-LECTRIC Model K Machine; -3, -4, or -6 is used on AMP-O-LECTRIC Model G Machine. See pages 207-210 for further information.

Keying Plug

IS 408-7582

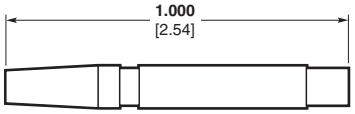

Part Number
200821-1
Note: Keying plug snaps into socket housing

Material

Housing — Nylon, natural color

Flammability Rating — UL94V-2

Note: All part numbers are RoHS Compliant.

Catalog 82181
Revised 4-08
www.tycoelectronics.com

Dimensions are in inches and millimeters unless otherwise specified. Values in brackets are metric equivalents.

Dimensions are shown for reference purposes only. Specifications subject to change.

USA: 1-800-522-6752
Canada: 1-905-470-4425
Mexico: 01-800-733-8926
C. America: 52-55-1106-0803
South America: 55-11-2103-6000
Hong Kong: 852-2735-1628
Japan: 81-44-844-8013
UK: 44-8706-080-208

Commercial MATE-N-LOK Connectors (Continued)

Housings

Free-Hanging

.200 [5.08] Centerline spacing

Material

Housing—Nylon, natural color

Flammability Rating—UL94V-2

Related Product Data

Product Specification

108-1000 Commercial MATE-N-LOK Connectors

Performance Characteristics—pages 151-152
Contacts—pages 155-156
Commoning Tabs—page 155
Keying Plug—page 156
Technical Documents—pages 151 and 205-206
Mating Pin Headers—pages 161-164
Mating Socket Headers—page 162
Mating IDC—page 163

1 Circuit

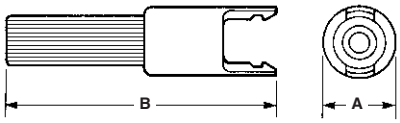

Pin Housing (Cap) Detent Lock

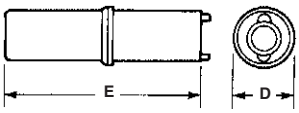

Socket Housing (Plug)

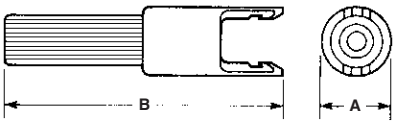

Pin Housing (Cap) Positive Lock

2, 3 and 4 Circuit, In-Line

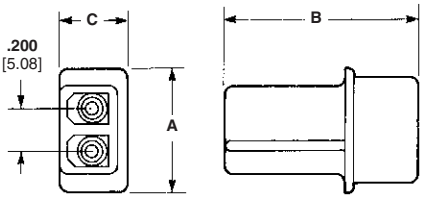

Pin Housing (Cap)

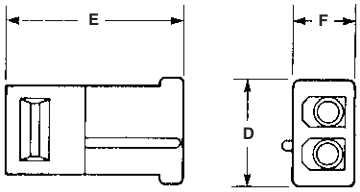

Socket Housing (Plug)

Number of Circuits	Dimensions						Part Numbers	
	A	B	C	D	E	F	Pin Housing (Cap)	Socket Housing (Plug)
1	**.300** 7.62	**1.200** 30.48	—	**.260** 6.60	**.870** 22.10	—	1-480350-0[1]	1-480349-0
	.300 7.62	**1.240** 31.49	—	**.260** 6.60	**.870** 22.10	—	1-480351-0[2]	1-480349-0
	.300 7.62	**1.325** 33.65	—	**.260** 6.60	**.995** 25.27	—	1-480401-0[1,3]	1-480400-0[3]
2	**.610** 15.49	**.930** 23.62	**.330** 8.38	**.530** 13.46	**.860** 21.84	**.295** 7.49	1-480319-0[1,5]	1-480318-0[5]
	.610 15.49	**.930** 23.62	**.330** 8.38	**.530** 13.46	**.860** 21.84	**.295** 7.49	1-480498-1[1,3,5]	1-480393-1[3,5]
3	**.810** 20.57	**.930** 23.62	**.325** 8.25	**.825** 20.95	**.850** 21.60	**.290** 7.37	1-480305-0[1,5]	1-480303-0[5]
	.810 20.57	**.930** 23.62	**.325** 8.25	**.825** 20.95	**.850** 21.60	**.290** 7.37	1-480387-0[1,3,5]	1-480388-0[3,5]
4	**1.010** 25.65	**.930** 23.62	**.330** 8.38	**1.030** 26.16	**.850** 21.60	**.310** 7.88	1-480426-0[1,5,6]	1-480424-0[5,6]
	—	—	—	**1.030** 26.16	**.850** 21.60	**.310** 7.88	794132-1[4,5,6]	770827-1[4,5,6]

[1]Detent lock
[2]Positive lock
[3]UV Stable black color
[4]Housing Material UL94V-0 rated
[5]Housing accepts double wire applications where individual insulation diameters do not exceed .115 [2.92].
[6]Used by the disk drive industry.

Note: **All part numbers are RoHS Compliant.**

Catalog 82181
Revised 4-08
www.tycoelectronics.com

Dimensions are in inches and millimeters unless otherwise specified. Values in brackets are metric equivalents.

Dimensions are shown for reference purposes only. Specifications subject to change.

USA: 1-800-522-6752
Canada: 1-905-470-4425
Mexico: 01-800-733-8926
C. America: 52-55-1106-0803
South America: 55-11-2103-6000
Hong Kong: 852-2735-1628
Japan: 81-44-844-8013
UK: 44-8706-080-208

Commercial MATE-N-LOK Connectors (Continued)

Housings
Free-Hanging, Positive Lock

Material
Housing—Nylon, natural color
Flammability Rating—UL94V-2

2, 3, and 4 Circuit, In-Line
.200 [5.08] Centerline spacing

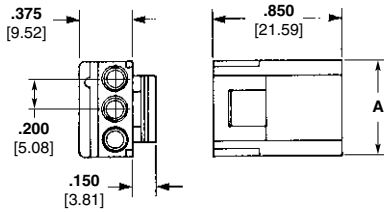

Socket Housing (Plug)

Number of Circuits	A Dim.	Part Numbers		
		Socket Housing (Plug)	Mates with Pin Headers	Mates with Cap Housing
2	**.435** 11.04	1-480720-0	350539, 350540	794012-1
3	**.630** 16.00	1-480721-0	350541	—
4	**.830** 21.09	1-480722-0[1]	350543[1], 350544[1]	—

[1]Used by the disk drive industry.

6 Circuit, Dual Row

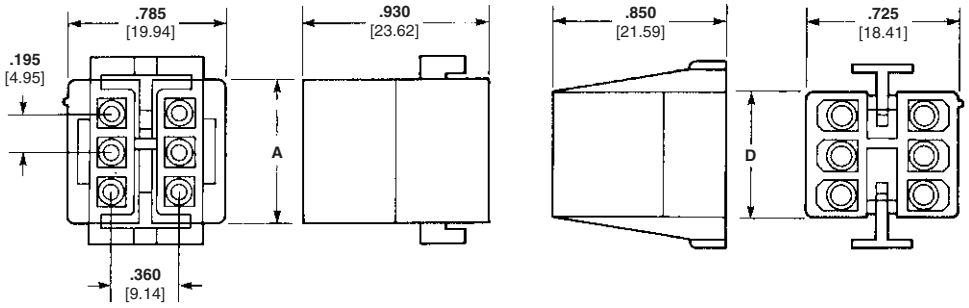

Pin Housing (Cap)
Socket Housing (Plug)

8 and 10 Circuit, Dual Row

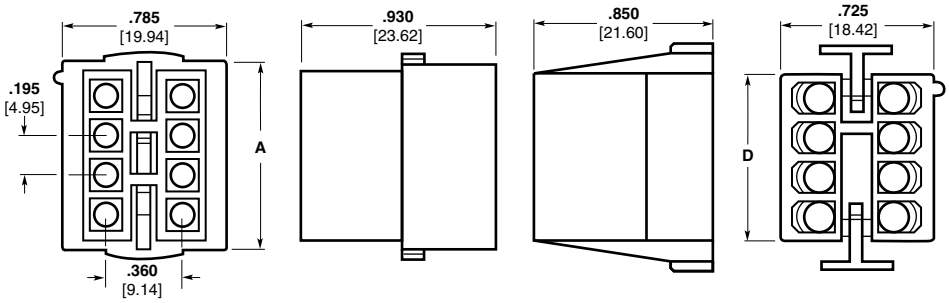

Pin Housing (Cap)
Socket Housing (Plug)

Number of Circuits	Dimensions		Part Numbers	
	A	D	Pin Housing (Cap)	Socket Housing (Plug)
6	**.705** 17.91	**.610** 15.49	1-480340-0	1-480270-0[1]
8	**.900** 22.86	**.805** 20.44	1-480345-0	1-480283-0[1]
10	**1.095** 27.81	**1.000** 25.40	1-480339-0	1-480285-0[1]

[1]Housing accepts double wire applications where individual insulation diameters do not exceed .115 [2.92].

Note: **All part numbers are RoHS Compliant.**

Related Product Data
Product Specification
108-1000 Commercial MATE-N-LOK Connectors
Performance Characteristics—pages 151-152
Contacts—pages 155-156
Commoning Tabs—page 155
Keying Plug—page 156
Technical Documents—pages 151 and 205-206
Mating Headers—pages 161-164

Dimensions are in inches and millimeters unless otherwise specified. Values in brackets are metric equivalents.
Dimensions are shown for reference purposes only. Specifications subject to change.
USA: 1-800-522-6752
Canada: 1-905-470-4425
Mexico: 01-800-733-8926
C. America: 52-55-1106-0803
South America: 55-11-2103-6000
Hong Kong: 852-2735-1628
Japan: 81-44-844-8013
UK: 44-8706-080-208

Commercial MATE-N-LOK Connectors (Continued)

Housings

Panel Mount, Positive Lock

Material

Housing—Nylon, natural color

Flammability Rating—UL94V-2

Related Product Data

Product Specification

108-1000 Commercial MATE-N-LOK Connectors

Performance Characteristics—pages 151-152
Contacts—pages 155-156
Commoning Tabs—page 155
Keying Plug—page 156
Technical Documents—pages 151 and 205-206
Mating Socket Headers—page 162
Mating IDC—page 163

3 and 4 Circuit, In-Line

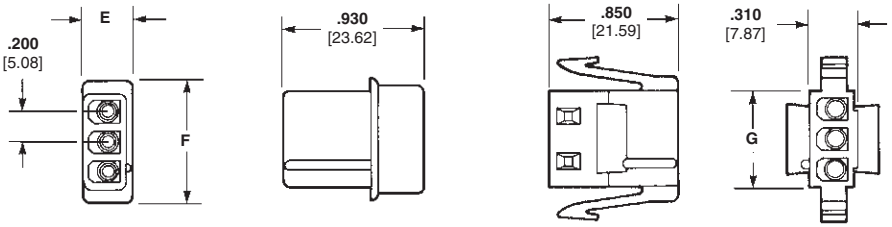

Pin Housing (Cap)

Socket Housing (Plug)

6, 9, 12 and 15 Circuit, Matrix

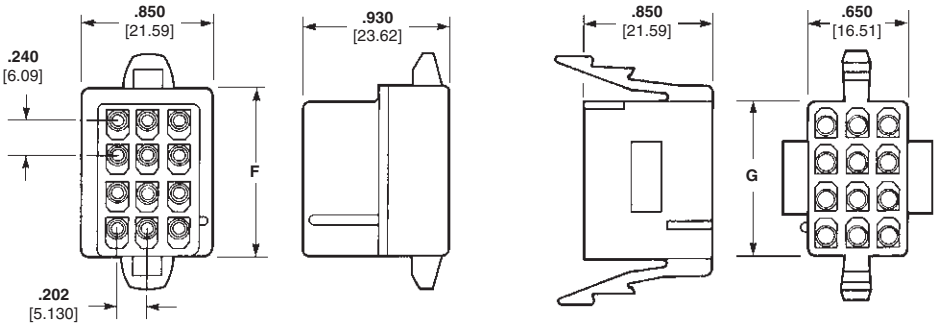

Pin Housing (Cap)

Socket Housing (Plug)

Number of Circuits	Dimensions E	Dimensions F	Dimensions G	Part Numbers Pin Housing (Cap)	Part Numbers Socket Housing (Plug)
3	**.325** 8.26	**.810** 20.57	**.630** 16.00	1-480305-0[2]	1-480304-0
4	**.330** 8.38	**1.010** 25.65	**.825** 20.96	1-480426-0[2,4] 3-480426-0[1,2,4]	1-480425-0[4] 3-480425-0[1,4]
6	—	**.665** 16.89	**.555** 14.10	1-480276-0[3]	1-480273-0
9	—	**.905** 22.99	**.795** 20.19	1-480277-0[3]	1-480274-0
12	—	**1.145** 29.08	**1.045** 26.54	1-480278-0[3]	1-480275-0
15	—	**1.382** 35.10	**1.280** 32.51	1-480324-0[3]	1-480323-0

[1]Housing material has 125°C temperature rating
[2]Detent lock
[3]Positive lock
[4]Used by disk drive industry

Note: All part numbers are RoHS Compliant.

Recommended Panel Cutout for Panel Mount Socket Housing

View is from socket housing entry side

Mounting Information

1. Recommended panel thickness—.025-.065 [.635-1.65].
2. Both locking legs are to be squeezed together and the housing is to be inserted "straight-in", as opposed to a rocking manner.
3. The panel should be punched so that the housing enters the panel in the same direction as the punch.
4. The panel must not have any material (paint, porcelain, etc.) applied in the mounting hole area that would decrease the retention of the housing in the panel.
5. If the two items above are not complied with, the "A" dimension should be reduced .020 [5.08] for proper retention.

3 and 4 Circuit, In-Line

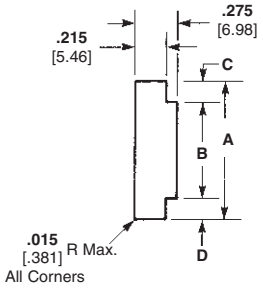

6, 9, 12 and 15 Circuit, Matrix

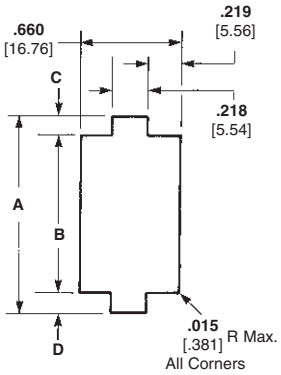

Number Circuits	Dimensions A	Dimensions B
3	**.890** 22.61	**.645–.635** 16.38–16.13
4	**1.100** 27.94	**.845–.835** 21.46–21.21
6	**.840** 21.34	**.575–.570** 14.61–14.48
9	**1.075** 27.31	**.815–.810** 20.70–20.57
12	**1.320** 33.53	**1.055–1.050** 26.80–26.67
15	**1.550** 39.37	**1.290–1.285** 32.77–32.64

Note: Dimensions "C" and "D" are to be equal.

Catalog 82181
Revised 4-08
www.tycoelectronics.com

Dimensions are in inches and millimeters unless otherwise specified. Values in brackets are metric equivalents.

Dimensions are shown for reference purposes only. Specifications subject to change.

USA: 1-800-522-6752
Canada: 1-905-470-4425
Mexico: 01-800-733-8926
C. America: 52-55-1106-0803
South America: 55-11-2103-6000
Hong Kong: 852-2735-1628
Japan: 81-44-844-8013
UK: 44-8706-080-208

Commercial MATE-N-LOK Connectors (Continued)

Motor Mount, Positive Lock

6, 8, 10, 12 and 16 Circuit, Dual Row

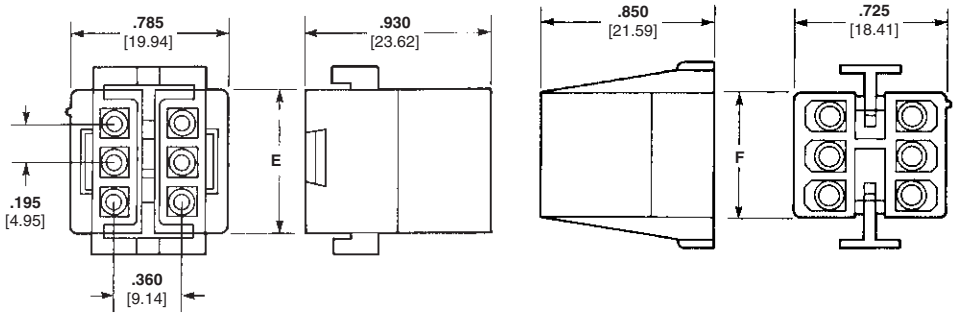

Pin Housing (Cap) Socket Housing (Plug)

Number of Circuits	Dimensions E	Dimensions F	Part Numbers Pin Housing (Cap)	Part Numbers Socket Housing (Plug)
			UL94V-2 Nylon, Natural Color	
6	**.705** 17.90	**.610** 15.49	1-480271-0	1-480270-0[1]
8	**.900** 22.86	**.805** 20.45	1-480284-0	1-480283-0[1]
10	**1.095** 27.81	**1.000** 25.4	1-480286-0	1-480285-0[1]
12	**1.290** 32.77	**1.195** 30.35	1-480288-0	1-480287-0
16	**1.680** 42.67	**1.585** 40.26	1-480439-0	1-480438-0

[1]Housing accepts double wire applications where individual insulation diameters do not exceed .115 [2.92].

Note: All part numbers are RoHS Compliant.

Recommended Panel Cutout for Motor Mount Pin Housing

View is from pin housing entry side.

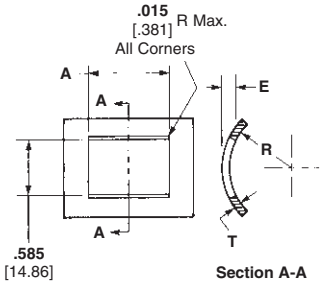

Note: Motor mount housings may be used in flat panels

Number of Circuits	A Dim.
6	**.715** 18.16
8	**.910** 23.11
10	**1.105** 28.07
12	**1.300** 33.02
16	**1.690** 42.93

Mounting Information

1. Recommended panel thickness "E" is .040-.100 [1.02-2.54] and is dependent on "T" and "R".
2. The pin housing must be inserted in a rocking manner.
3. The panel must be punched so that the housing enters the panel in the same direction as the punch.

Dimensions are in inches and millimeters unless otherwise specified. Values in brackets are metric equivalents.

Dimensions are shown for reference purposes only. Specifications subject to change.

USA: 1-800-522-6752
Canada: 1-905-470-4425
Mexico: 01-800-733-8926
C. America: 52-55-1106-0803
South America: 55-11-2103-6000
Hong Kong: 852-2735-1628
Japan: 81-44-844-8013
UK: 44-8706-080-208

Commercial MATE-N-LOK Connectors (Continued)

PC Board Vertical Pin Headers

Material

Housing — Nylon, natural color
Flammability Rating — UL94V-2
Contacts — Phosphor bronze
Solder tail diameter .062 [1.57]

Related Product Data

Product Specifications
108-1077 Commercial MATE-N-LOK PC Board Headers
Performance Characteristics—pages 151-152
Technical Documents—pages 151 and 205-206
Mating Socket Housings—pages 157-160
Mating Socket Headers—page 162
Mating IDC—page 163

2, 3, and 4 Circuit, In-Line

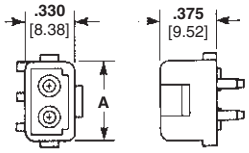

Positive Lock

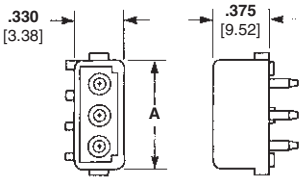

Detent Lock

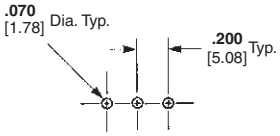

Recommended PC Board Hole Layout Mounting Dimensions

6, 8, 10, 12 and 16 Circuit, Dual Row

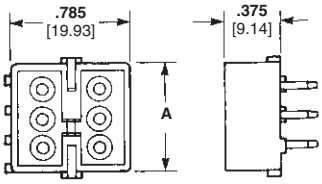

Positive Lock

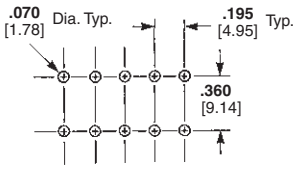

Recommended PC Board Hole Layout Mounting Dimensions

Number of Circuits	A Dim.	Type Lock	Finish	Part Numbers: Standard[2] Tail	Part Numbers: Long[3] Tail	Mates with Socket Housing Part Number
2	**.515** 13.09	Positive	Pre-tin	350539-1	350540-1	1-480720-0
			Duplex[1]	1586530-2	—	
		Detent	Pre-tin	350209-1	350422-1	1-480318-0
			Duplex[1]	1586512-2	—	
3	**.715** 18.17	Positive	Pre-tin	350541-1	350542-1	1-480721-0
			Duplex[1]	1586532-2	—	
		Detent	Pre-tin	350210-1	350423-1	1-480303-0
			Duplex[1]	1586514-2	—	
4	**.915** 23.24	Positive	Pre-tin	350543-1[5]	350544-1[5]	1-480722-0[5]
			Duplex[1]	1586534-2[5]	1586536-2[5]	
		Detent	Pre-tin	350211-1[5]	350424-1[5]	1-480424-0[4,5]
				794236-1[5,8]		
			Post-tin	1586627-1[5,6]		
				1-1586627-1[5,6,7]		
			Duplex[1]	1586515-2[5]	1586525-2[5]	
6	**.705** 17.91	Positive	Pre-tin	1-380999-0	350425-1	1-480270-0
			Duplex[1]	2-1586546-0	1586526-2	
8	**.900** 22.86	Positive	Pre-tin	350212-1	350426-1	1-480283-0
			Duplex[1]	1586518-2	1586528-2	
10	**1.095** 27.81	Positive	Pre-tin	1-380991-0	350219-1	1-480285-0
			Duplex[1]	2-1586544-0	—	
12	**1.290** 32.77	Positive	Pre-tin	350213-1	350220-1	1-480287-0
			Duplex[1]	1586520-2	1586524-2	
16	**1.680** 42.68	Positive	Pre-tin	350214-1	350427-1	1-480438-0
			Duplex[1]	1586522-2	1586529-2	

[1]Duplex Finish — Plated with .000030 [.000762] min. gold in mating area, matte tin on solder tail end over .000050 [.00127] min. nickel underplate on entire contact.
[2]Use standard tail for .062 [1.57] thick PC Board.
[3]Use long tail for .125 [3.18] thick PC Board.
[4]Other mating connectors include a vertical PC Board socket header and the insulation displacement connectors (IDC).
[5]Used by the disk drive industry.
[6]With drain holes.
[7]Tube loaded.
[8]Housing material UL94V-0 rated.

Note: All part numbers are RoHS Compliant.

Dimensions are in inches and millimeters unless otherwise specified. Values in brackets are metric equivalents.
Dimensions are shown for reference purposes only. Specifications subject to change.
USA: 1-800-522-6752
Canada: 1-905-470-4425
Mexico: 01-800-733-8926
C. America: 52-55-1106-0803
South America: 55-11-2103-6000
Hong Kong: 852-2735-1628
Japan: 81-44-844-8013
UK: 44-8706-080-208

Commercial MATE-N-LOK Connectors (Continued)

PC Board Surface Mount Right-Angle Pin Header

Material and Finish

Housing — Nylon, black color
Flammability Rating — UL94V-2
Contact — Phosphor bronze, pre-tin
Solder tail width .052 [1.32]

4 Circuit, In-Line

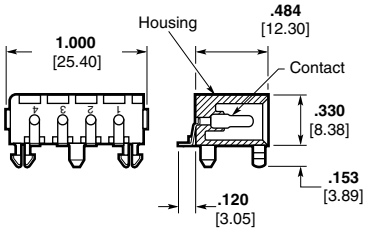

Part Number
770829-1

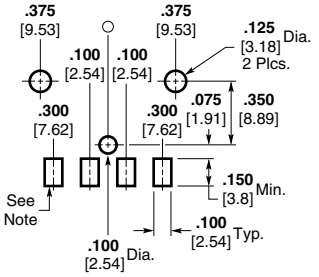

Note: .010 [.25] min. thick solder paste, 63/27 tin

Recommended PC Board Layout
.062 [1.57] thick PC Board

Notes:
1. Mating parts include socket housings, a vertical PC Board socket header below and the insulation displacement connectors (IDC).
2. Used by the disk drive industry.

PC Board Vertical Socket Headers

Material

Housing — Nylon, natural color
Flammability Rating — UL94V-2
Contacts—Phosphor bronze
Solder tail diameter .062 [1.57]

4 Circuit, In-Line

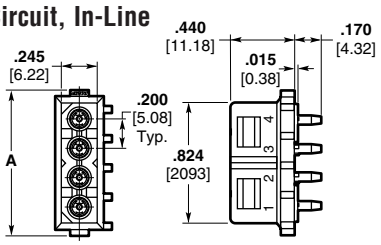

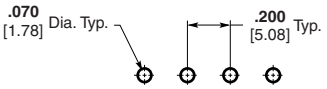

Recommended PC Board Hole Layout
.062 [1.57] thick PC Board

6, 9, 12 and 15 Circuit, Matrix

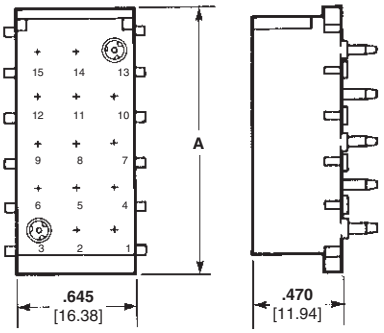

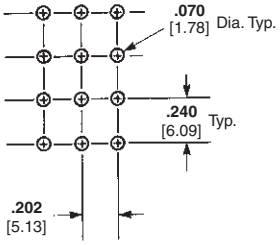

Recommended PC Board Hole Layout
.062 [1.57] thick PC Board

Number of Circuits	A Dim.	Finish	Part Numbers Standard Tail[5]	Part Numbers Long Tail[6]	Mates with Pin Housing Part Number
4	**1.000** 25.40	Pre-tin	770997-1[3]	—	1-480426-0[2,3]
			794285-1[3,7]	—	
			794287-1[3,4,8]	—	
6	**.720** 18.29	Pre-tin	350641-1	350576-1	1-480276-0
		Duplex[1]	1586539-2	—	
9	**.960** 24.39	Pre-tin	350642-1	350577-1	1-480277-0
12	**1.200** 30.49	Pre-tin	350643-1	350578-1	1-480278-0
15	**1.440** 36.58	Pre-tin	350644-1	350579-1	1-480324-0

[1]Duplex Finish — Plated with .000030 [.000762] min. gold in mating area, matte tin on solder tail end over .000050 [.00127] min. nickel underplate on entire contact.
[2]Other mating connectors include vertical, right-angle and surface mount PC Board pin headers.
[3]Used by the disk drive industry.
[4]Surface mount compatible.
[5]Use standard tail for .062 [1.57] thick PC Board.
[6]Use long tail for .125 [3.18] thick PC Board.
[7]Low Mating Force
[8]High Temperature
Note: All part numbers are RoHS Compliant.

Related Product Data

Product Specifications
108-1077 Commercial MATE-N-LOK PC Board Headers
Performance Characteristics—pages 151-152
Technical Documents—pages 151 and 205-206
Mating Pin Housings—pages 157-160
Mating Pin Headers—pages 161-164
Mating Socket Housings—pages 157-160
Mating Socket Headers—page 162
Mating IDC—page 163

Commercial MATE-N-LOK Connectors (Continued)

PC Board Right-Angle Pin Headers

Material and Finish

Contact — Phosphor bronze, pre-tin
Solder tail width .052 [1.32]

2, 3, and 4 Circuit, In-Line

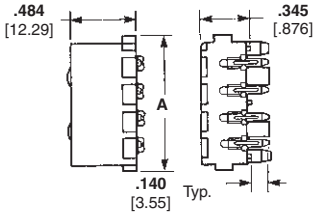

2, 3, and 4 Circuit

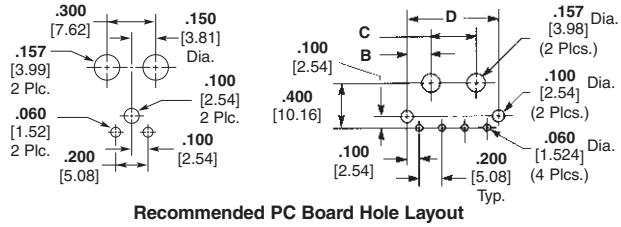

Recommended PC Board Hole Layout
.062 [1.57] thick PC Board

Number of Circuits	Dimensions A	Dimensions B	Dimensions C	Dimensions D	Housing Material	Part Numbers	Mates with Socket Housing Part Number
2	**.600** 15.24	—	**.300** 7.62	—	UL94V-2 Nylon Natural Color	794120-1	1-480318-0
3	**.800** 20.32	**.150** 3.81	**.300** 7.62	**.600** 15.24	UL94V-0 Nylon	643488-1	1-480303-0
4	**1.000** 25.40	**.200** 5.08	**.400** 10.16	**.800** 20.32	UL94V-2 Nylon, Natural Color	641737-1[3] 770846-1[1,3]	1-480424-0[2,3]
					UL94V-0 Nylon	1-641737-1[3]	770827-1[2,3]

[1]Surface Mount Compatible. [2]Other mating connectors include a vertical PC Board socket header and the insulation displacement connectors (IDC). [3]Used by the disk drive industry.

Dust Covers

Material

Housing — Polyester, white color
Flammability Rating — UL94V-2

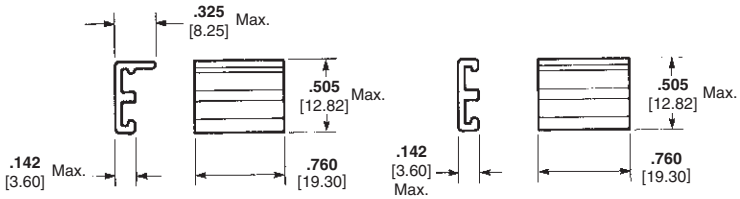

For Feed-To Wiring
Part Number 770232-1

For Feed-Through Wiring
Part Number 770233-1

Note: These parts are used with the insulation displacement connectors below.

Insulation Displacement Connectors (IDC)

Material

Housing — Nylon
Contact — Phosphor bronze

Related Product Data

Used by the disk drive industry.

Product Specifications
108-1077 Commercial MATE-N-LOK PC Board Headers
108-49000 IDC Connectors

Application Specification
114-49001 IDC Connectors

Performance Characteristics— pages 151-152
Technical Documents— pages 151 and 205-206
Mating Socket Housings— pages 157-160
Mating Pin Housings— pages 157-160
Mating Pin Headers— pages 161-164

4 Circuit, In-Line

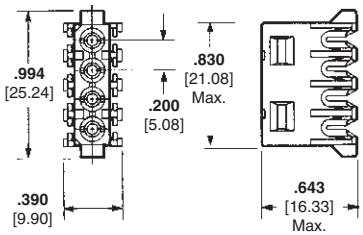

Socket Assembly (Plug)

Wire Size Range AWG [mm²]	Color Code	Finish	Part Number UL94V-2	Part Number UL94V-0	Mates with Part Numbers
22 [.3]	Red	Pre-tin	770156-2	794036-3	1-480426-0** 350211-1 350211-2 350424-1 350424-2 641737-1 1-641737-1 770827-1 770829-1 770846-1
20 [.5]	Yellow	Pre-tin	770156-4	794036-2	
18 [.8]	Orange	Pre-tin	770156-3	794036-1	
16 [1.2]	Blue	Pre-tin	770156-5*	794036-4	

*Application Tooling: Arbor Tool 91085-2 uses head 231920-2. **Pin Housing

Notes:
1. Insulation diameter .095 [2.41] max.
2. Application Tooling
Power Unit No. **91112-2** (IS 408-7763) uses Head No. **231920-2** (IS 408-9330) and Hand Tool Handle No. **58074-1** (IS 408-6790) uses Terminating Head No. **231894-1**(IS 408-3186)

Note: All part numbers are RoHS Compliant.

Catalog 82181
Revised 4-08
www.tycoelectronics.com

Dimensions are in inches and millimeters unless otherwise specified. Values in brackets are metric equivalents.

Dimensions are shown for reference purposes only. Specifications subject to change.

USA: 1-800-522-6752
Canada: 1-905-470-4425
Mexico: 01-800-733-8926
C. America: 52-55-1106-0803
South America: 55-11-2103-6000
Hong Kong: 852-2735-1628
Japan: 81-44-844-8013
UK: 44-8706-080-208

Commercial MATE-N-LOK Connectors (Continued)

PC Board Right-Angle Pin Header with Fix Belt

Material

Housing — Thermoplastic
Flammability Rating — UL94V-2
Contacts — Copper Alloy

Related Product Data

Used by the disk drive industry

Product Specification
108-5155

4 Circuit, In-Line

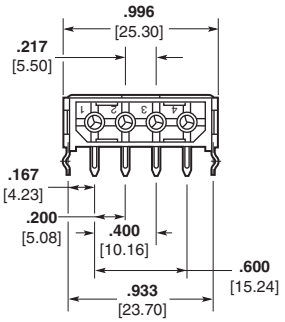

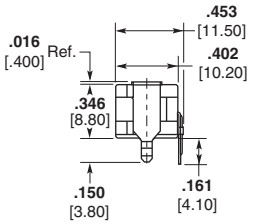

Part No. 174552-1

Notes: Mates with socket housing Part No. 1-480424-0. Other mating connectors include a vertical PC Board socket header and the insulation displacement connectors (IDC).

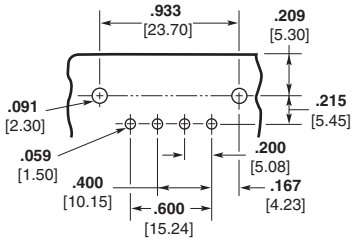

Recommended PC Board Hole Layout
.062 [1.57] thick PC Board

PC Board Right-Angle Pin Headers with Fix Belt

Reverse Polarization

Material and Finish

Housing — Nylon
Flammability Rating — UL94V-2
Contacts — Tin plated, Copper alloy

Related Product Data

Used by the disk drive industry

Product Specification
108-5155

4 Circuit, In-Line

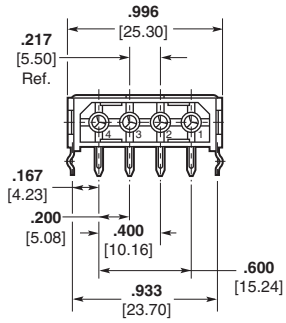

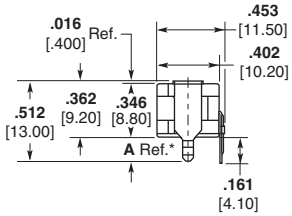

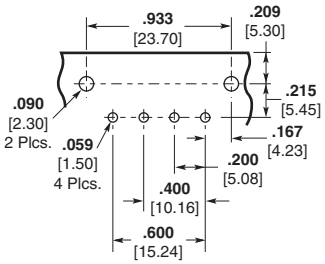

Part No.	A Dim.*	Description
174804-1	.150 3.80	Long Clamp with Kink

Part No. 174804*

Recommended PC Board Hole Layout
.062 [1.57] thick PC Board

Notes: Mates with socket housing Part No. 1-480424-0. Other mating connectors include a vertical PC Board socket header and the insulation displacement connectors (IDC).

Note: All part numbers are RoHS Compliant.

Catalog 82181
Revised 4-08
www.tycoelectronics.com

Dimensions are in inches and millimeters unless otherwise specified. Values in brackets are metric equivalents.

Dimensions are shown for reference purposes only. Specifications subject to change.

USA: 1-800-522-6752
Canada: 1-905-470-4425
Mexico: 01-800-733-8926
C. America: 52-55-1106-0803
South America: 55-11-2103-6000
Hong Kong: 852-2735-1628
Japan: 81-44-844-8013
UK: 44-8706-080-208

.140 MATE-N-LOK Connectors (Large Insulation), .240 Centerline

Product Facts

- **Available in 2, 3 and 9 circuit configurations for panel mounting; 4 and 9 circuit configurations for free-hanging applications**
- **Standard natural nylon housings**
- **Housings fully polarized**
- **Contacts fully protected in housings**
- **Contacts accept wire size range 20-10 AWG [.5-5.0 mm2] with insulation diameters from .100 [2.54] to .180 [4.57]**
- **Low insertion/extraction forces**
- **Dual locking lances provide optimum contact stability**
- **Extraction tool removes both pins and sockets**
- **Contacts are on .240 [6.09] centerline spacing**
- **Not for interrupting current**
- **Recognized under the Component Program of Underwriters Laboratories Inc., File No. E28476**
- **Certified by Canadian Standards Association, File No. LR 7189A**

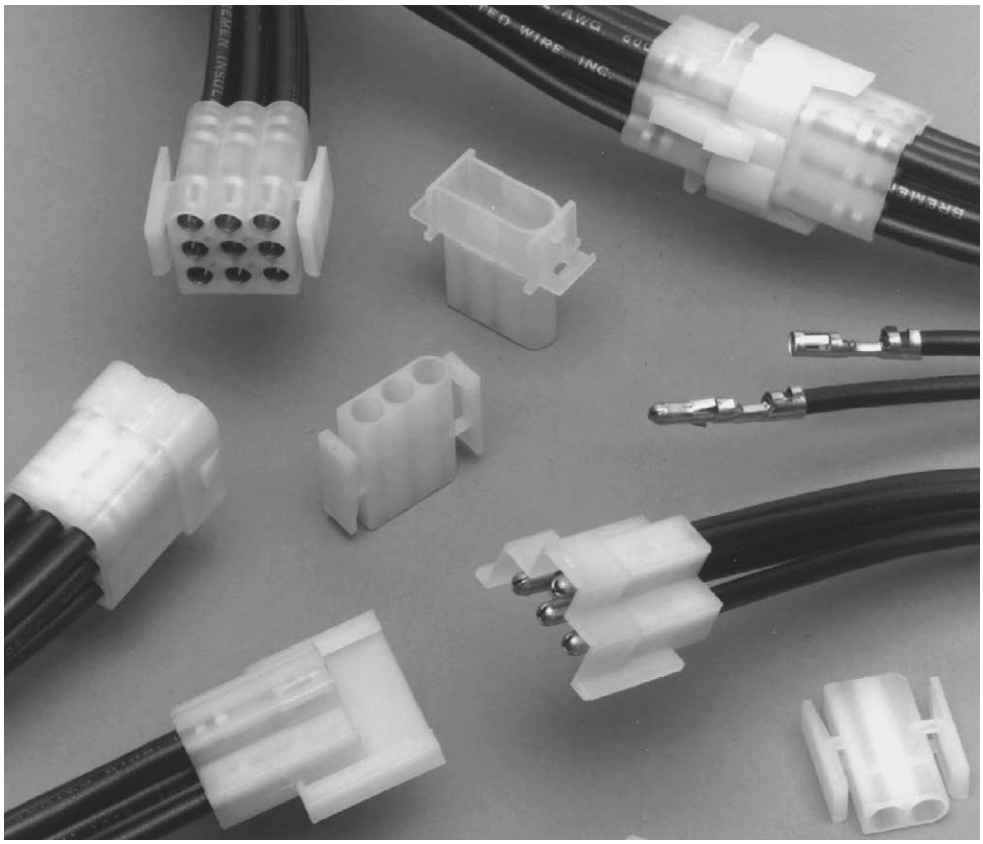

Performance Characteristics

The .140 MATE-N-LOK Connector performance characteristics found on this page are based on free-hanging and panel mount connectors, loaded with contacts crimped on stranded wire.

Dielectric Withstand Voltage—3.0 KVAC between adjacent circuits

Insulation Resistance—1000 megohms minimum initial between adjacent circuits

Voltage Rating—600 V AC or DC

Connector Mating—4.5 lb. max. per circuit

Connector Unmating—.8 lb. min. per circuit

Contact Retention—30 lb. min.

Durability—25 cycles, mating and unmating

Thermal Shock— -55°C to +85°C

Temperature-Humidity Cycling—25°C to 65°C at 95 RH

Maximum Current—Maximum current rating of .140 MATE-N-LOK Connectors is limited by the maximum operating temperature of the housings which is 105°C and the temperature rise of the contacts which is 30°C. There are several variables which have a direct effect on this maximum current-carrying capability for a given connector and must be considered for each application. These variables are:

Wire Size—Larger diameter wire will carry more current since it has less internal resistance to current flow and thus generates less heat. Longer wire lengths also enhance current-carrying capabilities since the wire conducts heat away from the connector.

Connector Size—In general, the more circuits in a connector, the less current can be carried.

Ambient Temperature—The higher the ambient temperature, the less current can be carried in any given connector.

Technical Documents

Product Specification

108-1032 .140 Diameter MATE-N-LOK Connectors

Application Specification

114-1007 .140 Diameter MATE-N-LOK Contacts

Wire Size		Termination Resistance		Contact Crimp Tensile Force	
				Force (Min.)	
AWG	mm2	Test Current (Amps)	Resistance Milliohms (Max. Init.)	lbs.	N
20	.5	4.5	3.0	20	89
18	.8	6	2.5	30	133
16	1.2	8	2.5	45	200
14	2.0	10	2.0	50	222
12	3.0	12	1.5	60	267
10	5.0	14	1.5	65	289

Note: This is the total resistance between wire crimps of a mated pin and socket.

Current Rating Verification for 30°C Maximum Temperature Rise 100% Energized

Wire-to-Wire

.140 MATE-N-LOK Connector Calculated Current Table

Number of Circuits	Wire AWG					
	10	12	14	16	18	20
2	28.00	23.00	18.50	15.00	13.50	10.50
3	25.00	21.00	17.00	13.50	12.00	9.50
9	18.50	15.00	12.00	10.00	9.00	7.00

Values are based on initial Temperature Rise versus Current Testing and are intended to be a guide in the selection of a connector family. All applications should be tested by the end user. The values listed are per circuit for fully loaded housings being 100% energized. **Note:** All combinations were not tested, and this chart contains interpolated and extrapolated values.

Minimum Wire Lengths for T-Rise vs. Current Testing

Note: If wire lengths used are less than those listed, the current carrying ability of the system will be reduced due to less heat being conducted away from the connector. The customer should fully test all applications.

Catalog 82181
Revised 4-08
www.tycoelectronics.com

Dimensions are in inches and millimeters unless otherwise specified. Values in brackets are metric equivalents.

Dimensions are shown for reference purposes only. Specifications subject to change.

USA: 1-800-522-6752
Canada: 1-905-470-4425
Mexico: 01-800-733-8926
C. America: 52-55-1106-0803
South America: 55-11-2103-6000
Hong Kong: 852-2735-1628
Japan: 81-44-844-8013
UK: 44-8706-080-208

.140 MATE-N-LOK Connectors (Large Insulation), .240 Centerline (Continued)

Contacts

Pin diameter .140 [3.57]
Stock thickness .014 [.357]

Related Product Data

Product Specification
108-1032 .140 Diameter MATE-N-LOK Connectors

Application Specification
114-1007 .140 Diameter MATE-N-LOK Contacts

Performance Characteristics—page 159
Keying Plug—none
Housings—pages 166-167
Technical Documents—pages 165 and 205-206
Application Tooling—pages 207-210

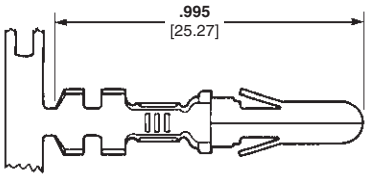

Pin

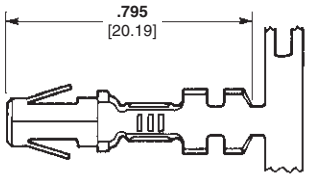

Socket

Wire Size Range AWG [mm2]	Ins. Dia. Range	Material & Finish	Contact Part Numbers: Pin, Strip Form	Pin, Loose Piece	Socket, Strip Form	Socket, Loose Piece	HDM Applicator Part No.	Hand Tool Part No.
20-14 [.5-2.0]	.100-.180 2.54-4.5	Brass. pre-tin	61627-1	350389-1	61626-1	350388-1	567306-1 567306-2 567306-3	90247-1
		Phos. Brz., pre-tin	61627-2	—	61626-2	—		
14-10 [2.0-5.0]	.100-.180 2.54-4.5	Brass. pre-tin	350201-1	350391-1	350200-1	350390-1	567309-1 567309-2 567309-3	69710-1[2]
		Phos. Brz., pre-tin	350201-2	350391-2	350200-2	350390-2		

[1]HDM Applicator part number ending in -1 is used on AMPOMATOR CLS Machine with T or G Terminators, -2 is used on AMP-O-LECTRIC Model K Machine, -3 is used on AMP-O-LECTRIC Model G Machine. See pages 207-210 for further information.
[2]Hand Tool No. **69710-1** uses die set No. **58374-1** for 14-12 AWG and No. **58373-1** for 10 AWG.

Contact Extraction Tool
Part No. 318845-1
IS 408-4378

Housings

Free-Hanging
.240 [6.09] Centerline spacing

Material

Nylon, natural color

Flammability Rating—UL94V-2

Cavity Identification
(Rear View)

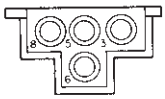
Cap

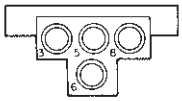
Plug

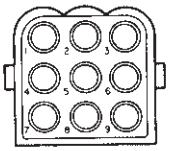
Cap

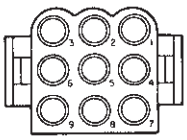
Plug

4 Circuit

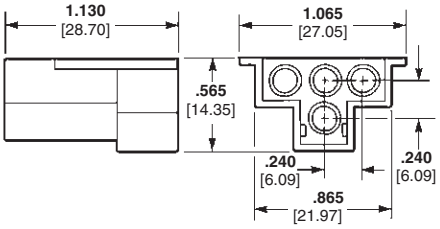

Pin Housing (Cap)
Part No. 1-480512-0
Part No. 794700-1 (Black Color High Temp.)

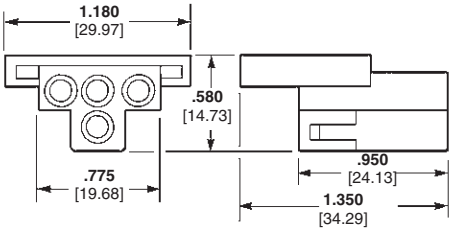

Socket Housing (Plug)
Part No. 1-480510-0

9 Circuit, Matrix

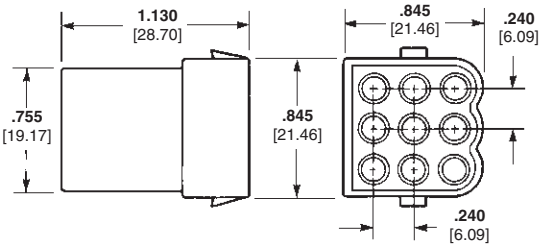

Pin Housing (Cap)
Part No. 1-480586-0

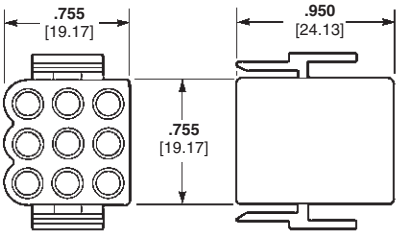

Socket Housing (Plug)
Part No. 1-480585-0

Note: **All part numbers are RoHS Compliant.**

.140 MATE-N-LOK Connectors (Large Insulation), .240 Centerline (Continued)

Housings

Panel Mount

.240 [6.09] Centerline spacing

Material

Housing — Nylon, natural color

Flammability Rating — UL94V-2

Cavity Identification
(Rear View)

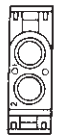
Plug

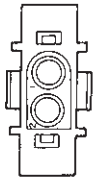
Cap

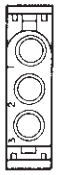
Plug

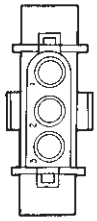
Cap

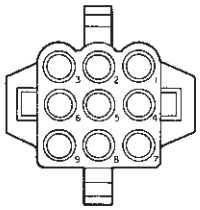
Plug

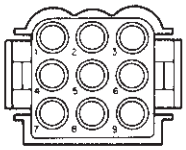
Cap

2 and 3 Circuit, In-Line

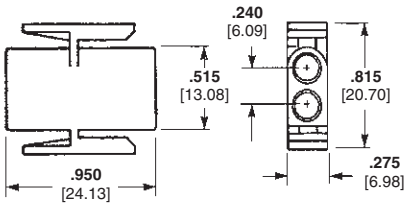

Socket Housing (Plug)
Part No. 1-350344-0
Part No. 794699-1 (Black Color High Temp.)

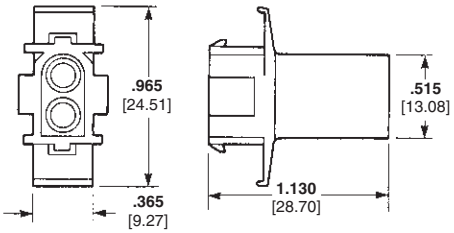

Pin Housing (Cap)
Part No. 1-350345-0
Part No. 1586305-1 (Black Color High Temp.)

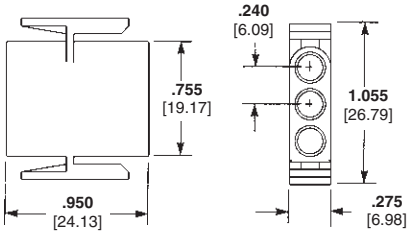

Socket Housing (Plug)
Part No. 1-350346-0

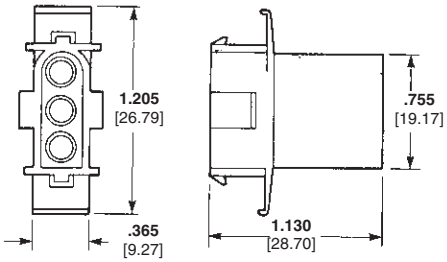

Pin Housing (Cap)
Part No. 1-350347-0
Part No. 794061-1 (Black Color High Temp.)

9 Circuit, Matrix

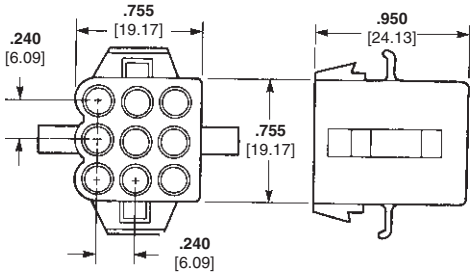

Socket Housing (Plug)
Part No. 1-480672-0
Part No. 1586305-1 (Black Color High Temp.)

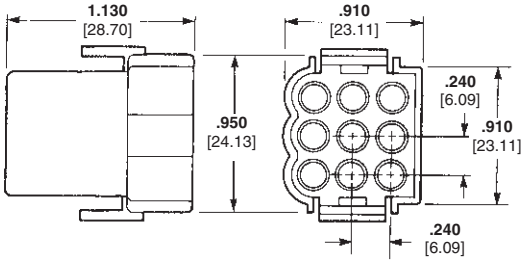

Pin Housing (Cap)
Part No. 1-480673-0
Part No. 794683-1 (Black Color High Temp.)

Recommended Panel Cutouts

View is from housing entry side

2 and 3 Circuit

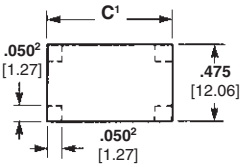

[1] 2 Circuit-.725 [18.42]
3 Circuit- .965 [24.51]
[2] .050 x .050 [1.27-1.27] tabs in corners of outlet are optional to reduce housing float in panel.

9 Circuit

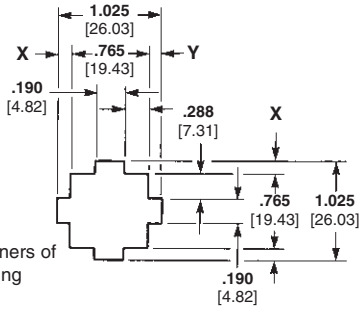

Notes:
1. Panel thickness .040-.070 [1.02-1.78].
2. "X" and "Y" dimensions must be within .005 [.127] of each other.
3. Panel should be punched so that the housing enters the panel in the same direction as the punch for ease of assembly.

Related Product Data

Product Specification
108-1032 .140 Diameter MATE-N-LOK Connectors

Application Specification
114-1007 .140 Diameter MATE-N-LOK Contacts

Performance Characteristics— page 165
Keying Plug— none
Contacts— page 166
Technical Documents— pages 165 and 205-206

Note: **All part numbers are RoHS Compliant.**

Catalog 82181
Revised 4-08
www.tycoelectronics.com

Dimensions are in inches and millimeters unless otherwise specified. Values in brackets are metric equivalents.

Dimensions are shown for reference purposes only. Specifications subject to change.

USA: 1-800-522-6752
Canada: 1-905-470-4425
Mexico: 01-800-733-8926
C. America: 52-55-1106-0803
South America: 55-11-2103-6000
Hong Kong: 852-2735-1628
Japan: 81-44-844-8013
UK: 44-8706-080-208

Engineering Notes

Catalog 82181
Revised 4-08

www.tycoelectronics.com

Dimensions are in inches and millimeters unless otherwise specified. Values in brackets are metric equivalents.

Dimensions are shown for reference purposes only. Specifications subject to change.

USA: 1-800-522-6752
Canada: 1-905-470-4425
Mexico: 01-800-733-8926
C. America: 52-55-1106-0803

South America: 55-11-2103-6000
Hong Kong: 852-2735-1628
Japan: 81-44-844-8013
UK: 44-8706-080-208

Universal MATE-N-LOK Connectors

Product Facts

- Pins and sockets can be intermixed in the same housing
- Positive polarization
- Rear cavity identification
- Contacts completely enclosed in housings
- Positive locking housings
- Insulation capability to .200 [5.08] diameter
- Removable, crimp snap-in contacts
- Low contact mating force
- Contacts accept 30-10 AWG [.05-5.0 mm²] wire sizes
- Contacts available with pre-tin or gold plating
- Dual locking lances provide optimum contact stability
- Panel mount or free-hanging
- Mate with Universal MATE-N-LOK II Housings
- Available in UL 94V-O flame retardant material. Meets the material requirements of table 25.1 of U.L. Standard 1410 (television receivers and video products)
- Not for interrupting current
- Harness to PC Board capability using pin or socket headers
- Pin and socket headers are available in both vertical and right-angle style
- Solderability—headers meet MIL-STD 202 Method 208
- Contacts are on .250 [6.35] centerline spacing
- Recognized under the Component Program of Underwriters Laboratories Inc., File No. E28476
- Certified by Canadian Standards Association, File No. LR 7189
- Passed test by VDE under their Registration Number 3980/Continuous Surveillance

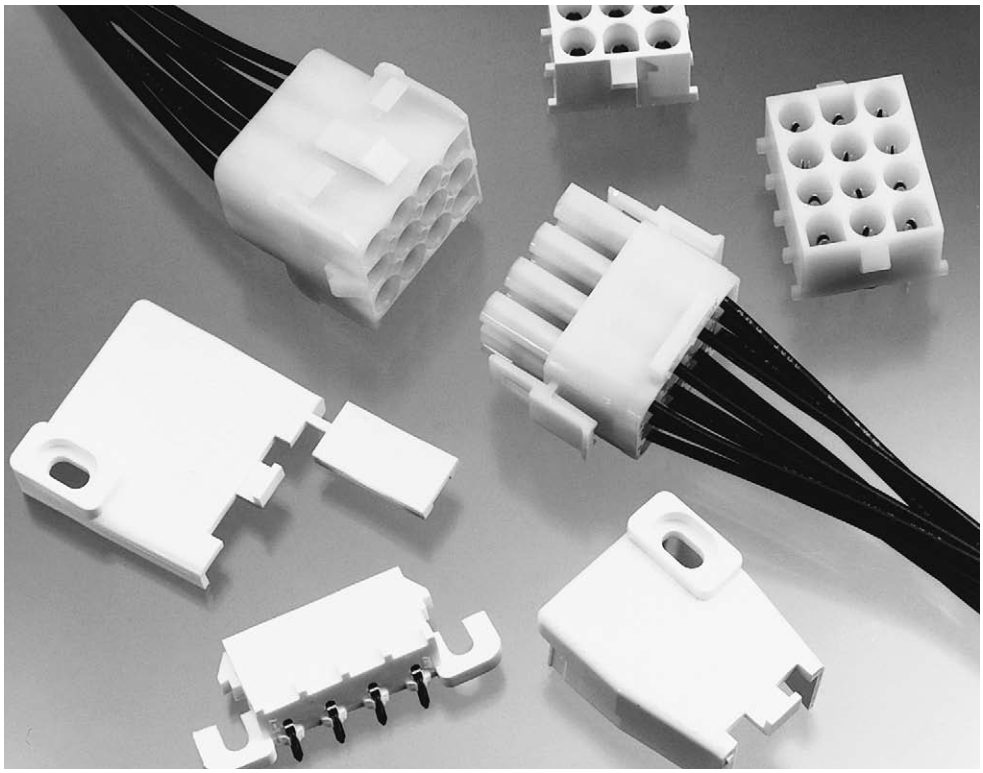

Performance Characteristics

The Universal MATE-N-LOK Connector performance characteristics found on pages 169-170 are based on free-hanging and panel mount connectors, loaded with contacts crimped on stranded wire.

Dielectric Withstanding Voltage—5.0 KVAC or 5.0 KVDC between adjacent circuits

Insulation Resistance—1000 megohms minimum initial between adjacent circuits

Voltage Rating—600 V AC or DC

Contact Insertion Force—5.0 lb. max. per contact

Contact Retention—15 lb. min. per contact

Durability—50 cycles, mating and unmating

Technical Documents

Product Specifications

108-1031 Universal MATE-N-LOK Connectors

108-1053 Universal MATE-N-LOK PC Board Headers

Application Specification

114-1010 Universal MATE-N-LOK Contacts

Instruction Sheet

408-7714 Plug, Cap, Headers, Pin, Socket and Accessories

Catalog 82181
Revised 4-08
www.tycoelectronics.com

Dimensions are in inches and millimeters unless otherwise specified. Values in brackets are metric equivalents.

Dimensions are shown for reference purposes only. Specifications subject to change.

USA: 1-800-522-6752
Canada: 1-905-470-4425
Mexico: 01-800-733-8926
C. America: 52-55-1106-0803
South America: 55-11-2103-6000
Hong Kong: 852-2735-1628
Japan: 81-44-844-8013
UK: 44-8706-080-208

Universal MATE-N-LOK Connectors (Continued)

Performance Characteristics (Continued)

Maximum Current—Maximum current rating of Universal MATE-N-LOK connectors is limited by the maximum operating temperature of the housings which is 125°C for 94V-2 housings and 120°C for 94V-0 housings including the temperature rise of the contacts which is a maximum of 30°C. There are several variables which have a direct effect on this maximum current-carrying capability for a given connector and must be considered for each application. These variables are:

Wire Size—Larger diameter wire will carry more current since it has less internal resistance to current flow and thus generates less heat. Longer wire lengths also enhance current carrying capabilities since the wire conducts heat away from the connector.

Connector Size—In general, the more circuits in a connector, the less current can be carried.

Ambient Temperature—The higher the ambient temperature, the less current can be carried in any given connector.

Printed Wiring Board Conductor Size—The finished trace conductor width and thickness should be maximized to allow for the greatest current carrying capacity and heat dissipation.

Universal MATE-N-LOK connectors also will withstand the following tests:

Vibration—10-55-10 cycles per minute at .06 inch total excursion

Physical Shock—18 drops, 50 G sawtooth at 10 milliseconds

Housing Panel Retention—75 lb. min.

Housing Lock Strength—30 lb. min.

Thermal Shock— -55°C to +85°C

Temperature-Humidity Cycling—25°C to 65°C at 95 RH

Corrosion—48 hr. at 5% salt concentration

Related Product Data

Product Specifications

108-1031 Universal MATE-N-LOK Connectors

108-1053 Universal MATE-N-LOK Headers

Current Rating Verification for 30°C Maximum Temperature Rise 100% Energized

Wire-to-Wire

Calculated Current Table

Number of Circuits	Wire Gauge									
	10	12	14	16	18	20	22	24	26	30
2	19.00	18.00	17.00	14.50	13.00	10.00	8.00	6.50	5.50	3.50
3	17.50	16.50	15.50	13.00	12.00	9.00	7.50	6.00	5.00	3.00
4	16.50	15.50	15.00	12.50	11.00	8.50	7.00	5.50	4.50	3.00
5	16.00	15.00	14.00	12.00	10.50	8.00	6.50	5.50	4.50	3.00
6 In-Line	15.50	14.50	13.50	11.50	10.00	8.00	6.50	5.00	4.00	2.50
6 Matrix	15.00	14.00	13.00	11.00	9.50	7.50	6.00	5.00	4.00	2.50
8	14.50	14.00	13.00	10.50	9.50	7.50	6.00	5.00	4.00	2.50
9	13.50	12.50	11.50	9.50	8.50	6.50	5.50	4.50	3.50	2.00
10	14.00	13.00	12.50	10.00	9.00	7.00	5.50	4.50	3.50	2.50
12	12.50	12.00	11.00	9.00	8.00	6.00	5.00	4.00	3.00	2.00
15	12.00	11.50	10.00	8.50	7.50	6.00	4.50	4.00	3.00	2.00

Values are based on initial Temperature Rise versus Current Testing and are intended to be a guide in the selection of a connector family. All applications should be tested by the end user. The values listed are per circuit for fully loaded housings being 100% energized. **Note:** All combinations were not tested, and this chart contains interpolated and extrapolated values.

Minimum Wire Lengths for T-Rise vs. Current Testing

AWG	Min. Length (in.)	AWG	Min. Length (in.)
30	2.6	18	9.4
28	3.2	16	11.3
26	4.1	14	13.7
24	5.1	12	16.4
20	7.8	10	19.3

Note: If wire lengths used are less than those listed above, the current carrying ability of the system will be reduced due to less heat being conducted away from the connector. The customer should fully test all applications.

Wire-to-Board

Due to the vast differences in trace geometry and printed circuit board configurations, we are unable to provide a separate current carrying chart for our printed circuit board header products. However, the above Wire-to-Wire charts may be used as a guideline for headers if the trace width and thickness is equal to the listed wire gauge. For vertical headers, only 95% of the Wire-to-Wire value should be used. For right-angle headers, only 75% of the Wire-to-Wire value should be used. The chart values are only a tool for connector selection and will require the customer to fully test their application.

Termination Resistance/Contact Crimp Tensile Force

Wire Size		Termination Resistance		Contact Crimp Tensile Force	
AWG	mm²	Test Current (Amps)	Resistance Milliohms (Max. Init.)	Force (Min.) lbs.	Force (Min.) N
30	.05	—	—	2	9
28	.08	—	—	3	13
26	.12	—	—	6	27
24	.2	1.5	3.50	8	36
22	.3	3	3.50	14	62
20	.5	4.5	3.00	14	62
18	.8	6	3.00	30	133
16	1.2	8	2.75	45	200
14	2.0	10	2.75	50	222
12	3.0	—	—	60	267
10	5.0	—	—	70	311

Note: This is the total resistance between wire crimps of a mated pin and socket.

Universal MATE-N-LOK Connectors (Continued)

Universal MATE-N-LOK Connector Mating Combinations

Connector Part Number[7]					Mating Connector Part Number								
					PC Board Headers[7]								
						Vertical Pin[2]			Vertical Socket[2]			Right-Angle[2]	
Number of Circuits	Flammability Rating	Style	Plug Part Number[2]	Cap Part Number[2]	Plating	Standard Tail	Standard Tail Polarized	Long Tail	Standard Tail	Standard Tail Polarized	Long Tail	Pin	Socket
1	UL94V-2	—	1-350867-0	770421-1	—	—	—	—	—	—	—	—	—
	UL94V-0	—	350865-1	350866-1	—	—	—	—	—	—	—	—	—
2	UL94V-2	In-Line	1-480698-0 794814-1[3]	1-480699-0 794815-1[3]	Pre-tin	350428-1	641963-1	350582-1	350759-4	643411-1	350986-4	—	—
					Duplex[1]	350428-4	641963-3	350582-4	350759-5	—	—	—	—
	UL94V-0	In-Line	350777-1	350778-1	Pre-tin	350786-1	641964-1 1-641964-1[5]	350787-1	350824-1	643412-1	350831-1	1-350942-0	643226-1
					Duplex[1]	350786-3	641964-3	350787-3	350824-4	643412-3	—	3-350942-0	—
3	UL94V-2	In-Line[6]	1-480700-0 794901-1[3]	1-480701-0 794900-1[3]	Pre-tin	350429-1	641965-1	350583-1	350760-4	643413-1	350987-4	—	—
					Duplex[1]	350429-4	—	350583-4	350760-5	—	—	—	—
	UL94V-0	In-Line	350766-1	350767-1	Pre-tin	350789-1	641966-1 1-641966-1[4]	350790-1	350825-1	643414-1	350832-1	1-350943-0	643228-1
					Duplex[1]	350789-3	—	350790-3	350825-4	643414-3	350832-4	3-350943-0	3-643228-0
4	UL94V-2	In-Line	1-480702-0 794899-1[3]	1-480703-0 794707-1[3]	Pre-tin	350430-1	641967-1	350584-1	350761-4	643415-1	350988-4	1-350948-0	—
					Duplex[1]	350430-4	—	350584-4	350761-5	—	350988-5	—	—
	UL94V-0	In-Line	350779-1	350780-1	Pre-tin	350792-1	641968-1	350793-1	350826-1	643416-1	350833-1	1-350944-0	643230-1
					Duplex[1]	350792-3	—	350793-3	350826-4	—	350833-4	3-350944-0	3-643230-0
5	UL94V-2	In-Line	1-480763-0	1-480764-0[3] 794863-1[3]	Pre-tin	640466-1	643405-1	—	640467-1	—	—	1-350949-0	—
					Duplex[1]	640466-3	—	—	640467-3	—	—	—	—
	UL94V-0	In-Line	350809-1	350810-1	Pre-tin	640900-1	643406-1	—	640901-1	—	—	1-350945-0	643232-1
					Duplex[1]	640900-3	—	—	640901-3	—	—	3-350945-0	3-643232-0
6	UL94V-2	In-Line	640585-1	926307-1	Pre-tin	641832-1	643407-1	—	—	—	—	640587-1	—
					Duplex[1]	641832-3	—	—	—	—	—	—	—
	UL94V-0	In-Line	640581-1	926307-3	Pre-tin	641831-1	643408-1	—	770262-1	—	—	640583-1	643234-1
					Duplex[1]	641831-3	—	—	770262-3	—	—	640583-3	3-643234-0
	UL94V-2	Matrix[6]	1-480704-0 794535-1[3] 794096-1[5]	1-480705-0 794536-1[3]	Pre-tin	350431-1	641969-1	350585-1	350762-4	643423-1	350989-4	—	—
					Duplex[1]	350431-4	—	350585-4	350762-5	—	350989-5	—	—
	UL94V-0	Matrix	350715-1	350781-1	Pre-tin	350711-1	641970-1	350732-1	350827-1	643424-1	350834-1	—	—
					Duplex[1]	350711-4	641970-3	350732-4	350827-4	643424-3	350834-4	—	—
8	UL94V-2	In-Line	640586-1	926308-1	Pre-tin	641825-1	—	770143-1	—	—	—	—	—
					Duplex[1]	—	—	—	—	—	—	—	—
	UL94V-0	In-Line	640582-1	926308-3	Pre-tin	641828-1	643410-1	—	—	—	—	640584-1	643236-1
					Duplex[1]	—	643410-3	—	—	—	—	640584-3	3-643236-0
9	UL94V-2	Matrix	1-480706-0 794537-1[3]	1-480707-0 794538-1[3]	Pre-tin	350432-1	641971-1	350586-1	350763-4	643425-1	350990-4	—	—
					Duplex[1]	350432-4	641971-3	350586-4	350763-5	—	350990-5	—	—
	UL94V-0	Matrix	350720-1	350782-1	Pre-tin	350712-1	641972-1 1-641972-1[4]	350742-1	350828-1	643426-1	350835-1	—	—
					Duplex[1]	350712-4	641972-3	350742-4	350828-4	643426-3	350835-4	—	—
10	UL94V-2	In-Line	926302-1	926309-1	Pre-tin	—	—	—	—	—	—	—	—
					Duplex[1]	—	—	—	—	—	—	—	—
	UL94V-0	In-Line	926302-3	926309-3	Pre-tin	—	—	—	—	—	—	—	—
					Duplex[1]	—	—	—	—	—	—	—	—
12	UL94V-2	Matrix	1-480708-0 794851-1[3]	1-480709-0 794727-1[3]	Pre-tin	350433-1	641973-1	350587-1	350764-4	—	350991-4	—	—
					Duplex[1]	350433-4	—	350587-4	350764-5	—	350991-5	—	—
	UL94V-0	Matrix	350735-1	350783-1	Pre-tin	350713-1	641974-1 1-641974-1[4]	350737-1	350829-1	643428-1	350836-1	—	—
					Duplex[1]	350713-4	641974-3	350737-4	350829-4	—	350836-4	—	—
15	UL94V-2[6]	Matrix	1-480710-0 794546-1[3]	1-480711-0 794545-1[3]	Pre-tin	350434-1	641975-1	350588-1	350765-4	643429-1	350992-4	—	—
					Duplex[1]	350434-4	—	350588-4	350765-5	—	—	—	—
	UL94V-0	Matrix	350736-1	350784-1	Pre-tin	350714-1	641976-1	350738-1	350830-1	643430-1	350837-1	—	—
					Duplex[1]	350714-4	641976-4	350738-4	350830-4	—	350837-4	—	—

[1]Duplex Finish — Plated with .000030 [.000762] min. gold in mating area, matte tin on solder tail end over .000050 [.00127] min. nickel underplate on entire contact.
[2]Universal MATE-N-LOK Plug and Cap housings accept pin or socket contacts. Use the appropriate contacts in the Plug housing as required by the mating component.
[3]Housing material has 125°C temperature rating.
[4]Black in color.
[5]Tool Removable
[6]UV Resistant housing material available.
[7]European glow wire housing material available.

Note: All part numbers are RoHS Compliant.

Catalog 82181
Revised 4-08
www.tycoelectronics.com

Dimensions are in inches and millimeters unless otherwise specified. Values in brackets are metric equivalents.

Dimensions are shown for reference purposes only. Specifications subject to change.

USA: 1-800-522-6752
Canada: 1-905-470-4425
Mexico: 01-800-733-8926
C. America: 52-55-1106-0803
South America: 55-11-2103-6000
Hong Kong: 852-2735-1628
Japan: 81-44-844-8013
UK: 44-8706-080-208

Universal MATE-N-LOK Connectors (Continued)

Contacts

Solid pin diameter .084 [2.13]

Stock thickness .012 [.305] unless otherwise noted.

These contacts can be used in either Universal MATE-N-LOK Plug or Cap housings **only**.

Related Product Data

Product Specification

108-1031 Universal MATE-N-LOK Connectors

Application Specification

114-1010 Universal MATE-N-LOK Contacts

Performance Characteristics—pages 169-170
Technical Documents—pages 169 and 205-206
Application Tooling—pages 207-210
Housings—page 174

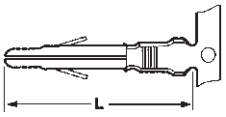

Solid Pin

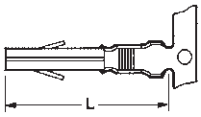

Socket

Wire Size Range AWG [mm²]	Ins. Dia. Range	L Dim. Pin	L Dim. Socket	Material & Finish	Contact Part Numbers: Pin Strip Form	Pin Loose Piece	Socket Strip Form	Socket Loose Piece	HDM Applicator Part No.	Hand Tool Part No.
30-26 [.05-.12]	**.032-.057** .813-1.45	**.790** 20.06	**.760** 19.30	Brass, Pre-tin	350924-1	770672-1	350925-1	770673-1	466616-2[6] 466616-3[6]	58439-1
				Phos. Brz., Gold[2]	350924-6	770672-6	350925-6	—		
24-18 [.2-.8]	**.040-.100** 1.02-2.54	**.790** 20.06	**.760** 19.30	Brass, Pre-tin	350561-1	350690-1	350851-1 350570-1[1]	350689-1[1]	466320-1[6] 466320-2[6] 466320-4[6]	91510-1
				Brass, Gold[2]	350561-2	350690-2	350851-2 350570-2[1]	640347-2 350689-2[1]		
				Brass, Select Gold[3]	350561-7	350690-7	350851-7 350570-7[1]	350689-7[1]		
				Phos. Brz., Pre-tin	350561-3	350690-3	350570-3[1]	350689-3[1]		
				Phos. Brz., Select Gold[3]	—	—	350570-6[1]	—		
20-14 [.5-2.0]	**.060-.130** 1.52-3.30	**.790** 20.06	**.760** 19.30	Brass, Pre-tin	350218-1	350547-1	350536-1	350550-1	687763-1[6] 687763-2[6] 687763-6[6]	91500-1
				Brass, Gold[2]	350218-2	350547-2	350536-2	350550-2		
				Brass, Select Gold[3]	350218-7	350547-7	350536-7	350550-7		
				Phos. Brz., Pre-tin	350218-3	350547-3	350536-3	350550-3		
				Phos. Brz., Select Gold[3]	350218-6	350547-6	350536-6	350550-6		
20-14 [.5-2.0] or 2@18 [.8]	**.130-.200** 3.30-5.08	**.810** 20.57	**.780** 19.81	Brass, Pre-tin	350538-1	350552-1	350537-1	350551-1	687926-1[6] 687926-2[6] 687926-6[6]	91508-1[7] 91506-1[7]
				Brass, Gold[2]	350538-2	350552-2	350537-2	350551-2		
				Brass, Select Gold[3]	350538-7	350552-7	350537-7	350551-7		
				Phos. Brz., Pre-tin	350538-3	350552-3	350537-3	350551-3		
				Phos. Brz., Select Gold[3]	350538-6	350552-6	350537-6	350551-6		
18-14[4] [.8-2.0]	**.130-.200** 3.30-5.08	**.810** 20.57	**.780** 19.81	Brass, Pre-tin	350873-1	—	350874-1	—	466588-1[6] 466588-2[6] 466588-3[6]	91508-1[7] 91506-1[7]
				Phos. Brz., Pre-tin	350873-3	350918-3	350874-3	350919-3		
12-10 [3.0-5.0]	**.200 max.[5]** 5.08	**.810** 20.57	**.780** 19.81	Phos. Brz., Pre-tin	350922-3	640309-3	350923-3	640310-3	466597-1[6] 466597-2[6] 466597-3[6]	69710-1[7]
				Phos. Brz., Select Gold[3]	350922-6	640309-6	350923-6	640310-6		

[1]Socket Contact—.010 [.254] stock thickness
[2]Gold Finish—Plated with .000030 [.000762] min. gold in mating area and inside wire barrel over .000050 [.00127] min. nickel underplate on entire contact.
[3]Select Gold Finish—Plated with .000030 [.000762] min. gold in mating area over .000050 [.00127] min. nickel underplate on entire contact.
[4]Recommended for predominant use of 14 AWG wire.
[5]There is no insulation barrel on this contact. Insulation maximum diameter is limited by the housing.
[6]HDM Applicator part number ending in -1 is used on AMPOMATOR CLS Machine with T or G Terminators, -2 is used on AMP-O-LECTRIC Model K Machine, -3, -4 & -6 are used on AMP-O-LECTRIC Model G Machine. See pages 207-210 for further information.
[7]Hand Tool No. **91508-1** is for wire size 20-18 AWG. Hand Tool No. **91506-1** is for wire size 16-14 AWG. Hand Tool No. **69710-1** use die set No. **58380-1** for 12 AWG and No. **58380-2** for 10 AWG.

Note: Phosphor bronze material contacts should be used in high temperature/humidity cycling applications.
Note: All part numbers are RoHS Compliant.

Contact Retention Test Tool
Part No. 1586701-1
IS 408-10003

Contact Extraction Tool
Part No. 318851-1
IS 408-4371

Contact Insertion Tool
(For inserting contacts applied to small diameter wire)
Part No. 91002-1
IS 408-7347

Catalog 82181
Revised 4-08
www.tycoelectronics.com

Dimensions are in inches and millimeters unless otherwise specified. Values in brackets are metric equivalents.

Dimensions are shown for reference purposes only. Specifications subject to change.

USA: 1-800-522-6752
Canada: 1-905-470-4425
Mexico: 01-800-733-8926
C. America: 52-55-1106-0803
South America: 55-11-2103-6000
Hong Kong: 852-2735-1628
Japan: 81-44-844-8013
UK: 44-8706-080-208

Universal MATE-N-LOK Connectors (Continued)

Contacts

Split pin diameter .086 [2.18]

Stock thickness .012 [.305]

These contacts can be used in either Universal MATE-N-LOK Plug or Cap housings **only**.

Related Product Data

Product Specification

108-1031 Universal MATE-N-LOK Connectors

Application Specification

114-1010 Universal MATE-N-LOK Contacts

Performance Characteristics—pages 169-170
Technical Documents—pages 169 and 205-206
Application Tooling—pages 207-210
Housings—page 174

Split Pins

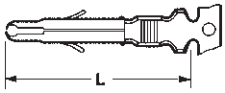

Wire Size Range AWG [mm²]	Ins. Dia. Range	L Dim.	Material & Finish	Contact Part Number		HDM Applicator Part No.	Hand Tool Part No.
				Strip Form	Loose Piece		
24-18 [.2-.8]	**.040-.100** 1.02-2.54	**.790** 20.06	Brass, Pre-tin	350699-1	350706-1	466320-1[3] 466320-2[3] 466320-4[3]	91510-1
			Brass, Gold[1]	350699-2	350706-2		
			Brass, Select Gold[2]	350699-7	350706-7		
20-14 [.5-2.0]	**.060-.130** 1.52-3.30	**.790** 20.06	Brass, Pre-tin	350687-1	350705-1	687763-1[3] 687763-2[3] 687763-6[3]	91500-1
			Brass, Gold[1]	350687-2	350705-2		
			Brass, Select Gold[2]	350687-7	350705-7		
20-14 [.5-2.0] or 2@18 [.8]	**.130-.200** 3.30-5.08	**.810** 20.57	Brass, Pre-tin	350700-1	350707-1	687926-1[3] 687926-2[3] 687926-6[3]	91508-1[4] 91506-1[4]
			Brass, Gold[1]	350700-2	350707-2		
			Brass, Select Gold[2]	350700-7	350707-7		

[1]Gold Finish — Plated with .000030 [.000762] min. gold in mating area and inside wire barrel over .000050 [.00127] min. nickel underplate on entire contact.
[2]Select Gold Finish — Plated with .000030 [.000762] min. gold in mating area over .000050 [.00127] min. nickel underplate on entire contact.
[3]HDM Applicator part number ending in -1, is used on AMPOMATOR CLS Machine with T or G Terminators, -2 is used on AMP-O-LECTRIC Model K Machine, -4 & -6 are used on AMP-O-LECTRIC Model G Machine. See pages 207-210 for further information.
[4]Hand Tool No. **91508-1** for wire size 20-18 AWG. Hand Tool No. **91506-1** for wire size 16-14 AWG.

Notes:
1. Split pins recommended for use in housings having 6, 9, 12 and 15 circuits to reduce mating force.
2. Phosphor bronze material contacts are available for use in high temperature/humidity cycling applications, consult Tyco Electronics.

Grounding Pins

(.100 [2.54] longer than standard pin)

(Mate first, break last, not for interrupting current)

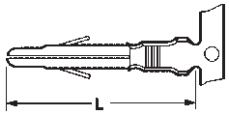

Wire Size Range AWG [mm²]	Ins. Dia. Range	L Dim.	Material & Finish	Contact Part Number		HDM Applicator Part No.	Hand Tool Part No.
				Strip Form	Loose Piece		
24-18 [.2-.8]	**.060-.130** 1.52-3.30	**.890** 22.60	Brass, Pre-tin	770210-1	—	567216-2[2] 567216-3[2]	—
20-14 [.5-2.0]	**.060-.130** 1.52-3.30	**.890** 22.60	Brass, Pre-tin	350654-1	350669-1	687763-1[2] 687763-2[2] 687763-6[2]	91500-1
12-10 [3.0-5.0]	**.200 max.**[1] 5.08	**.910** 23.11	Phos. Brz., Pre-tin	770234-3	—	466597-1[2] 466597-2[2] 466597-3[2]	—

[1]There is no insulation barrel on this contact. Insulation maximum diameter is limited by the housing.
[2]HDM Applicator part number ending in -1 is used on AMPOMATOR CLS Machine with T or G Terminators, -2 is used on AMP-O-LECTRIC Model K Machine, -3 & -6 are used on AMP-O-LECTRIC Model G Machine. See pages 207-210 for further information.

Programmable Connector Contact

(Socket with 110 Series Special FASTON Tab)

Material and Finish

Brass, pre-tin

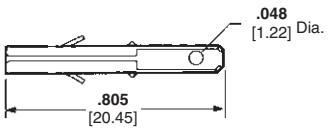

Part Number
350877-1

Note: This contact will accept a 110 Series FASTON Receptacle — Part No. **350871-1** (strip form) allowing simple field wiring or wiring changes.

Note: All part numbers are RoHS Compliant.

Catalog 82181
Revised 4-08
www.tycoelectronics.com

Dimensions are in inches and millimeters unless otherwise specified. Values in brackets are metric equivalents.

Dimensions are shown for reference purposes only. Specifications subject to change.

USA: 1-800-522-6752
Canada: 1-905-470-4425
Mexico: 01-800-733-8926
C. America: 52-55-1106-0803
South America: 55-11-2103-6000
Hong Kong: 852-2735-1628
Japan: 81-44-844-8013
UK: 44-8706-080-208

Universal MATE-N-LOK Connectors (Continued)

Housings

Free-Hanging or Panel Mount

.250 [6.35] Centerline spacing

2, 3, 4, 5, 6, 8 and 10 Circuit, In-Line

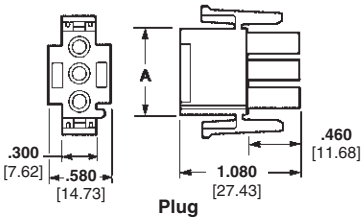

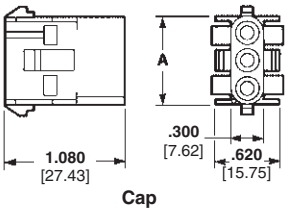

1 Circuit, Free-Hanging

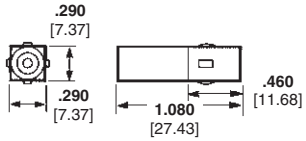

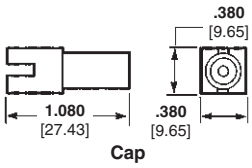

6 Circuit, Matrix

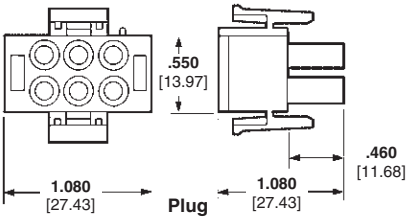

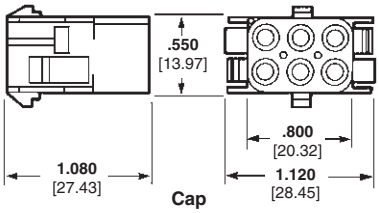

9, 12 and 15 Circuit, Matrix

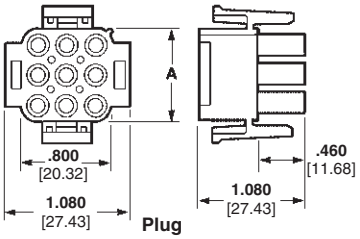

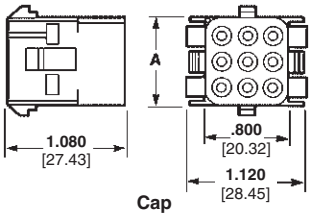

Related Product Data

Product Specification

108-1031 Universal MATE-N-LOK Connectors

Performance Characteristics—pages 169-170
Contacts—pages 172-173
Panel Cutout Recommendations—page 175
Keying Plug—page 175
Strain Reliefs—pages 175-176
Technical Documents—pages 169 and 205-206
Mating Headers—pages 182-183 and 185
Other Mating Connectors
Universal MATE-N-LOK II Housings—pages 193-194

Note: See charts on page 182 to order Plug and Cap Housings in **colors**.

Number of Circuits	A Dim.	Housing Part Numbers			
		UL94V-2 Nylon, Natural Color[2]		UL94V-0 Nylon[3]	
		Plug	Cap	Plug	Cap
1	—	1-350867-0	770421-1	350865-1	350866-1
2	**.550** 13.97	1-480698-0[1]	1-480699-0[1]	350777-1[1]	350778-1[1]
3	**.800** 20.32	1-480700-0[1]	1-480701-0[1]	350766-1[1]	350767-1[1]
4	**1.050** 26.67	1-480702-0[1]	1-480703-0[1]	350779-1[1]	350780-1[1]
5	**1.300** 33.02	1-480763-0[1]	1-480764-0[1]	350809-1[1]	350810-1[1]
6	**1.550** 39.37	640585-1[1]	926307-1[1]	640581-1[1]	926307-3[1]
	—	1-480704-0 / 794096-1[4]	1-480705-0	350715-1	350781-1
8	**2.050** 52.07	640586-1[1]	926308-1[1]	640582-1[1]	926308-3[1]
9	**.800** 20.32	1-480706-0	1-480707-0	350720-1	350782-1
10	**2.550** 64.77	926302-1[1]	926309-1[1]	926302-3[1]	926309-3[1]
12	**1.050** 26.67	1-480708-0	1-480709-0	350735-1	350783-1
15	**1.300** 33.02	1-480710-0	1-480711-0	350736-1	350784-1

[1]In-Line style.
[2]Housing material has 125°C temperature rating.
[3]Housing material has 120°C temperature rating.
[4]Tool Removable.

Note: All part numbers are RoHS Compliant.

Dimensions are in inches and millimeters unless otherwise specified. Values in brackets are metric equivalents.

Dimensions are shown for reference purposes only. Specifications subject to change.

USA: 1-800-522-6752
Canada: 1-905-470-4425
Mexico: 01-800-733-8926
C. America: 52-55-1106-0803
South America: 55-11-2103-6000
Hong Kong: 852-2735-1628
Japan: 81-44-844-8013
UK: 44-8706-080-208

Universal MATE-N-LOK Connectors (Continued)

Recommended Cap Housing Panel Cutouts

View is from cap entry side

Refer to Application Specification 114-1010

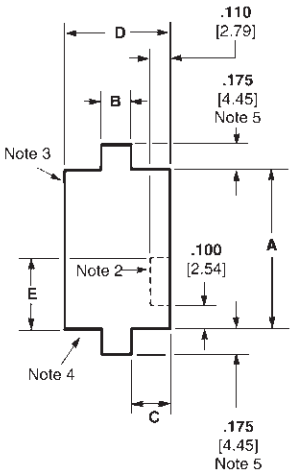

Style	Number of Circuits	Dimensions A	B	C	D	E
In-Line	2	**.565** 14.35	**.340** 8.64	**.095** 2.41	**.530** 13.46	**.250** 6.35
	3	**.815** 20.70	**.340** 8.64	**.095** 2.41	**.530** 13.46	**.250** 6.35
	4	**1.065** 27.05	**.340** 8.64	**.095** 2.41	**.530** 13.46	**.250** 6.35
	5	**1.315** 33.40	**.340** 8.64	**.095** 2.41	**.530** 13.46	**.250** 6.35
	6	**1.567** 39.80	**.154** 3.91	**.189** 4.80	**.531** 13.49	**.394** 10.0
	8	**2.067** 52.50	**.154** 3.91	**.189** 4.80	**.531** 13.49	**.394** 10.0
	10	**2.567** 65.20	**.154** 3.91	**.189** 4.80	**.530** 13.46	**.394** 10.0
Matrix	6	**.565** 14.35	**.480** 12.19	**.275** 6.99	**1.030** 26.16	**.250** 6.35
	9	**.815** 20.70	**.480** 12.19	**.275** 6.99	**1.030** 26.16	**.250** 6.35
	12	**1.065** 27.05	**.480** 12.19	**.275** 6.99	**1.030** 26.16	**.350** 8.89
	15	**1.315** 33.40	**.480** 12.19	**.275** 6.99	**1.030** 26.16	**.350** 8.89

Notes:
1. Recommended panel thickness — .030-.090 [.762-2.286]. Panel must be punched so that housing enters panel in same direction as the punch.
2. Optional — Do not remove this material when keying cap housing to panel.
3. Circuit #1 location when using panel keying with 6, 9, 12 and 15 circuit Matrix housings.
4. Circuit #1 location when using panel keying with 2, 3, 4, 5, 6, 8 and 10 circuit In-Line housings.
5. .175 [4.45] dimension is .125 [3.18] for 6, 8 and 10 circuit In-Line housings.

Keying Plugs

IS 408-3320

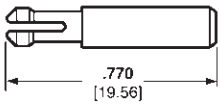

Part Numbers
UL94V-2 Nylon material, natural color — **1-640415-1**
UL94V-0 Nylon material — **1-640415-0**
Note: Keying plug snaps into plug or cap housing

Plug Housing Strain Reliefs

IS 408-3320

2, 3, 4, 5, 6 and 8 Circuit, In-Line

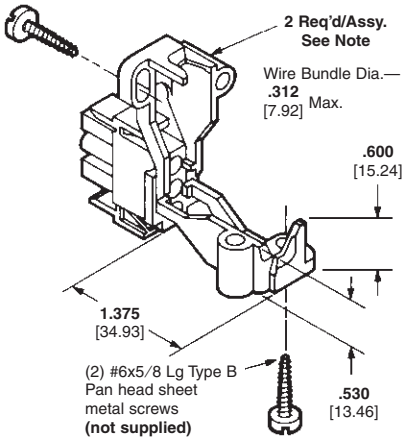

Part Numbers
UL94V-2 Nylon material, natural color — **1-350589-0**
UL94V-0 Nylon material — **350811-1**

6, 9, 12 and 15 Circuit, Matrix

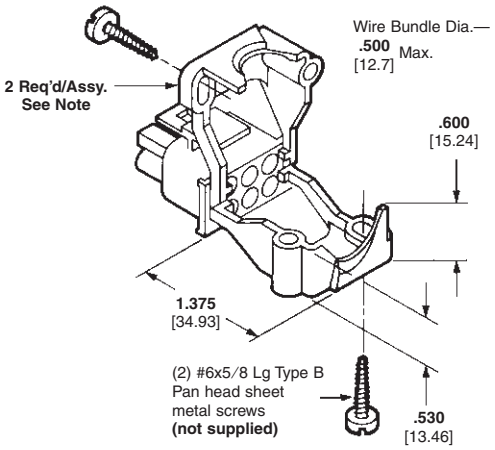

Part Numbers
UL94V-2 Nylon material, natural color — **1-350590-0**
UL94V-0 Nylon material — **350812-1**

Note: Strain relief part number represents one half of a strain relief. Two strain reliefs required per housing.

Note: All part numbers are RoHS Compliant.

Related Product Data

Plug Housings— page 174
Technical Documents— pages 169 and 205-206

Catalog 82181
Revised 4-08
www.tycoelectronics.com

Dimensions are in inches and millimeters unless otherwise specified. Values in brackets are metric equivalents.

Dimensions are shown for reference purposes only. Specifications subject to change.

USA: 1-800-522-6752
Canada: 1-905-470-4425
Mexico: 01-800-733-8926
C. America: 52-55-1106-0803
South America: 55-11-2103-6000
Hong Kong: 852-2735-1628
Japan: 81-44-844-8013
UK: 44-8706-080-208

Universal MATE-N-LOK Connectors (Continued)

Plug or Cap Housing Strain Reliefs

IS 408-3320

Related Product Data

Housings—page 174
Technical Documents—pages 169 and 205-206

2, 3, 4, 5, 6, 8, 9, 12 and 15 Circuit (Enclosed)

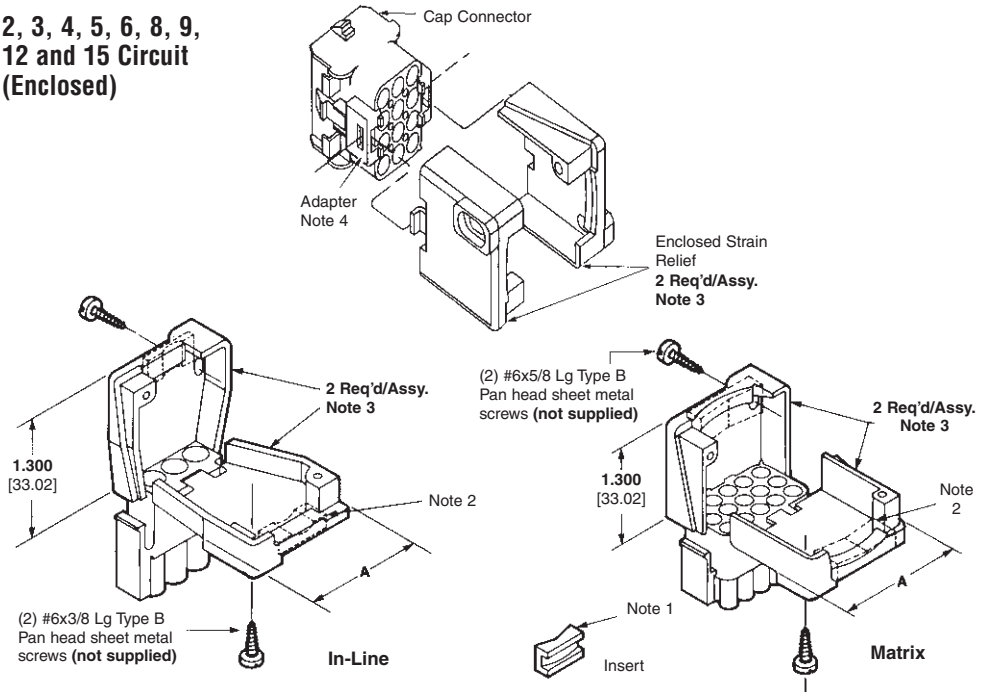

Cap Housing Adapters

These adapters are designed to anchor the cap housing strain reliefs to the housings and prevent the strain relief halves from "drawing in" when the screws are being torqued down to clamp the cable.

IS 408-3320

For All Positions Except 2, 6 and 8 Circuit Cap Housings

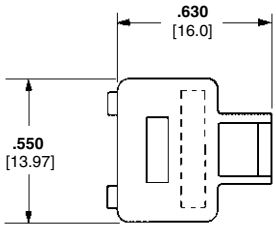

UL94V-2 Nylon material, natural color—**641777-1**

UL94V-0 Nylon material—**641778-1**

For 2 In-Line and 6 Matrix Circuit Cap Housings Only

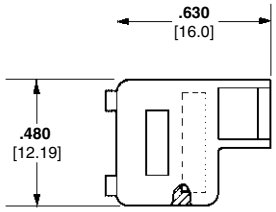

UL94V-2 Nylon material, natural color—**643182-1**
UL94V-0 Nylon material—**643182-2**

Style	Number of Circuits	A Dim.	Insert Supplied	Single Wire Dia. Range	Wire Bundle Dia. Range	Part Numbers: UL94V-2 Nylon, Natural Color	Part Numbers: UL94V-0 Nylon
In-Line	2	**.960** 24.38	Yes	**.040-.190** 1.02-4.83	—	1-640719-0	640713-1
			No	—	**.200-.350** 5.08-8.89	1-640719-1	640713-2
	3	**1.140** 28.96	Yes	**.040-.190** 1.02-4.83	—	1-640720-0	640714-1
			No	—	**.200-.350** 5.08-8.89	641763-1	641945-1
	4	**1.325** 33.65	Yes	**.040-.190** 1.02-4.83	—	641775-1	641776-1
			No	—	**.200-.350** 5.08-8.89	641775-2	641776-2
	5	**1.530** 38.86	Yes	**.040-.190** 1.02-4.83	—	643030-3	643030-1
			No	—	**.200-.350** 5.08-8.89	643030-2	643030-4
	6 Note 5	**1.780** 45.21	Yes	**.040-.190** 1.02-4.83	—	643585-1	643313-1
			No	—	**.200-.350** 5.08-8.89	643585-2	643313-2
	8 Note 5	**2.280** 56.08	Yes	**.040-.190** 1.02-4.83	—	—	643314-1
			No	—	**.200-.350** 5.08-8.89	—	643314-2
Matrix	6	**1.030** 26.16	Yes	—	**.120-.650** 3.05-16.51	1-640721-0	640715-1
	9	**1.030** 26.16	Yes	—	**.120-.650** 3.05-16.51	1-640722-0	640716-1
	12	**1.280** 32.51	Yes	—	**.150-.750** 3.81-19.05	1-640723-0	640717-1
	15	**1.530** 38.86	Yes	—	**.200-.850** 5.08-21.59	1-640724-0	640718-1

Notes:
1. Cable clamping insert comes attached to strain relief. It can be used to provide additional adjustment for small wire bundles or discarded.
2. Insert to be positioned as shown by dotted lines.
3. **Strain relief part number represents one-half of a strain relief. Two strain reliefs required per housing.**
4. Must use cap housing adapters when attaching strain reliefs to a cap housing. **Two adapters required per housing.**
5. Strain reliefs for 6 and 8 circuit In-Line fits plug housings only.

Note: All part numbers are RoHS Compliant.

Dimensions are in inches and millimeters unless otherwise specified. Values in brackets are metric equivalents.

Dimensions are shown for reference purposes only. Specifications subject to change.

USA: 1-800-522-6752
Canada: 1-905-470-4425
Mexico: 01-800-733-8926
C. America: 52-55-1106-0803
South America: 55-11-2103-6000
Hong Kong: 852-2735-1628
Japan: 81-44-844-8013
UK: 44-8706-080-208

Universal MATE-N-LOK Flanged Cap Housings with Twist and Lock Feature

Product Facts

- **Available in a 6, 9, and 12 circuit design**
- **Designed for household appliances where a bulkhead connector system is needed in conjunction with foam-in insulation**
- **Mates with standard Universal MATE-N-LOK plug housings (page 174)**
- **Accepts Universal MATE-N-LOK pin and socket contacts (page 167)**
- **Designed to utilize the Splash Proof/Sealed Universal MATE-N-LOK seals for additional sealing protection (pages 174-175)**

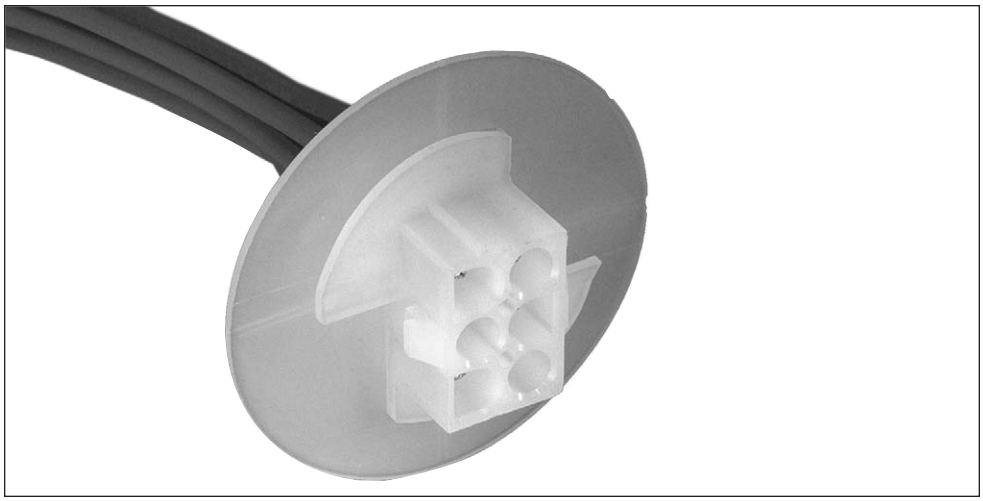

Material and Finish

Housing—Nylon, UL 94V-0 or UL 94V-2 rated
Contacts—Phosphor Bronze or Brass
Plating—Pre-tin or Gold

Related Product Data

Contacts—pages 172-173
Plug Housings—page 174
Seals—page 180

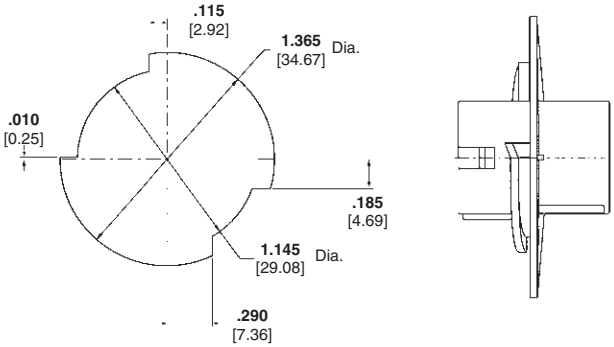

Recommended Panel Cutout (for 6 and 9 Pos. Housings)

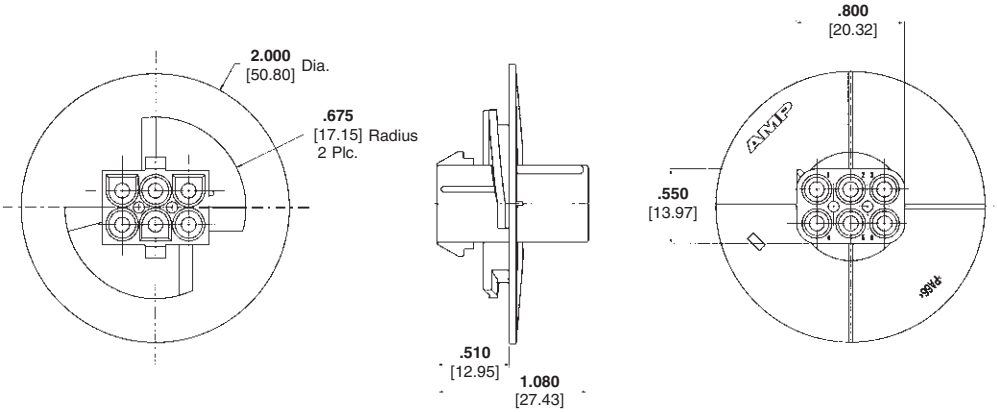

Notes:
1. Recommended Panel Thickness: 0.76-2.29 [.030-.090]
2. Panel must be punched so that the housing enters the panel in the same direction as the punch.
3. Asymmetrical panel cutout provides polarization for Pin 1 location.

Number of Circuits	Cap Housing Part Numbers	
	UL 94V-0	UL 94V-2
6	794760-1	794714-1
9	794761-1	794715-1
12	794762-1	794716-1

Note: **All part numbers are RoHS Compliant.**

Catalog 82181
Revised 4-08
www.tycoelectronics.com

Dimensions are in inches and millimeters unless otherwise specified. Values in brackets are metric equivalents.

Dimensions are shown for reference purposes only. Specifications subject to change.

USA: 1-800-522-6752
Canada: 1-905-470-4425
Mexico: 01-800-733-8926
C. America: 52-55-1106-0803
South America: 55-11-2103-6000
Hong Kong: 852-2735-1628
Japan: 81-44-844-8013
UK: 44-8706-080-208

Universal MATE-N-LOK Sealed Bulkhead Connectors

Product Facts

- **Bulkhead mount Universal MATE-N-LOK connector that facilitates sealed panel mounting and works with existing Universal MATE-N-LOK seals to provide a fully-sealed interconnection system**
- **Available in 4, 6, 9 and 12 positions**
- **Sealed, flange mount design**
- **Mates to standard Universal MATE-N-LOK plug housings**
- **Accepts standard Universal MATE-N-LOK contacts**
- **Works with standard Universal MATE-N-LOK connector interface and wire seals**
- **Anti-rotation feature aids installation**
- **Rear mount flange design enables use in wire harnesses**
- **Pins and sockets can be intermixed in the same housing**
- **UL Recognized, File No. E28476**
- **CSA Certified, File No. 1030930**

Applications

- **Vending Machines**
- **Industrial Machinery**
- **Lighting**
- **HVAC Equipment**

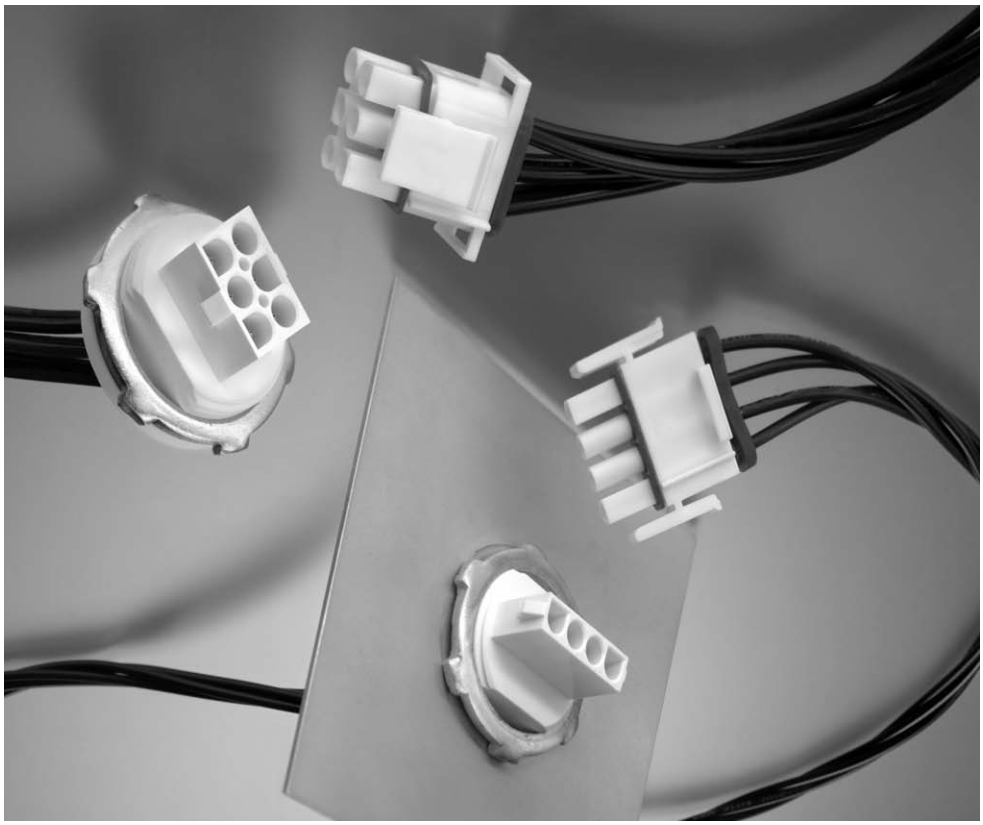

Performance Characteristics

Dielectric Withstanding Voltage—5.0 KVAC or 5.0 KVDC between adjacent circuits

Insulation Resistance—1000 megohms minimum initial between adjacent circuits

Voltage Rating—600 V AC or DC

Durability—50 cycles, mating and unmating

Technical Documents

Product Specification
108-1031 Universal MATE-N-LOK Connectors

Application Specification
114-1010 Universal MATE-N-LOK Contacts

Instruction Sheet
408-10017 Universal MATE-N-LOK Bulkhead Connectors

Catalog 82181
Revised 4-08
www.tycoelectronics.com

Dimensions are in inches and millimeters unless otherwise specified. Values in brackets are metric equivalents.

Dimensions are shown for reference purposes only. Specifications subject to change.

USA: 1-800-522-6752
Canada: 1-905-470-4425
Mexico: 01-800-733-8926
C. America: 52-55-1106-0803
South America: 55-11-2103-6000
Hong Kong: 852-2735-1628
Japan: 81-44-844-8013
UK: 44-8706-080-208

Universal MATE-N-LOK Sealed Bulkhead Connectors (Continued)

Connector Housings

4 Position Connector Housing (shown)

Material and Finish

Housing—Nylon, UL 94V-0 rated
Contacts—Brass with pre-tin or gold plating
O-ring Seal—Neoprene
Locking Nut—Steel, zinc plated

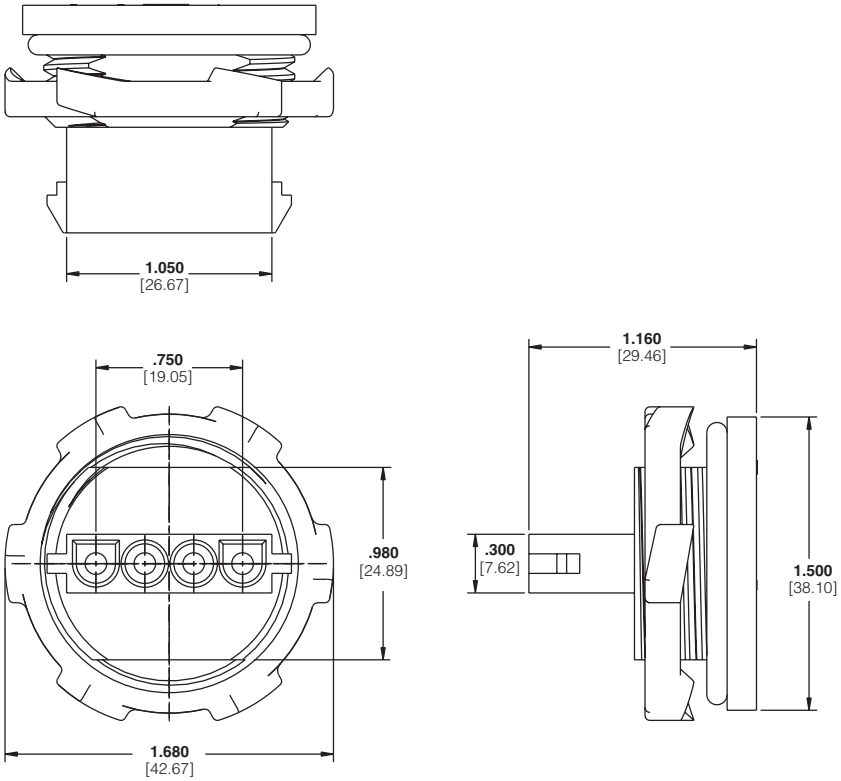

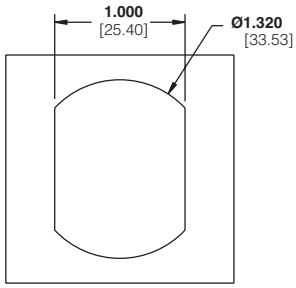

Recommended Panel Cut-Out for 4, 6 & 9 Position Product Only

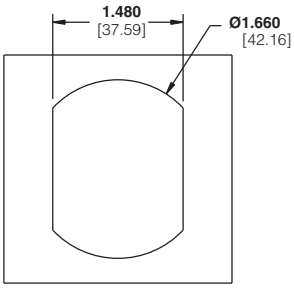

Recommended Panel Cut-Out for 12 Position Product Only

No. of Pos.	Style	Housing Part Number
4	In Line	1604256-1
6	Matrix	1604210-1
9	Matrix	1604254-1
12	Matrix	1604941-1

Note: All part numbers are RoHS Compliant.

Catalog 82181
Revised 4-08
www.tycoelectronics.com

Dimensions are in inches and millimeters unless otherwise specified. Values in brackets are metric equivalents.

Dimensions are shown for reference purposes only. Specifications subject to change.

USA: 1-800-522-6752
Canada: 1-905-470-4425
Mexico: 01-800-733-8926
C. America: 52-55-1106-0803
South America: 55-11-2103-6000
Hong Kong: 852-2735-1628
Japan: 81-44-844-8013
UK: 44-8706-080-208

Universal MATE-N-LOK Sealed Connectors

Splash Proof Seals

Product Facts

- **Economical splash proof/ immersible sealed connector system**
- **No design changes to existing Universal MATE-N-LOK product**
- **Existing applications utilizing Universal MATE-N-LOK connectors can be upgraded to a splash proof system**
- **Utilizes two wire seals and one interface seal**
- **Wire range is 20-14 AWG [.5-2.0] with insulation diameter range .060-.130 [1.52-3.30]**
- **.110-.130 [2.79-3.30] insulation diameter passed European IP sealing level 5/6 + 7 (swirling dust/ immersion to 1 meter for 30 minutes)**
- **.060-.110 [1.52-2.79] insulation diameter passed European IP sealing level 5/5 + 7 (swirling dust/ heavy seas)**
- **Universal MATE-N-LOK II keying plug can be used to seal unused circuits**
- **Primary application is for wire-to-wire; wire-to-board application must use a closed bottom header**

Material

Silicone rubber, blue color

Technical Documents

Product Specification

108-1031-1 Splash Proof Seal, Universal MATE-N-LOK Connectors

Contacts—page 175

Housings—page 174

Instruction Sheet

408-3392 Universal MATE-N-LOK Splash Proof Seals

Note: For proper use of this product, customer should make sure that Instruction Sheet 408-3392 is available for review.

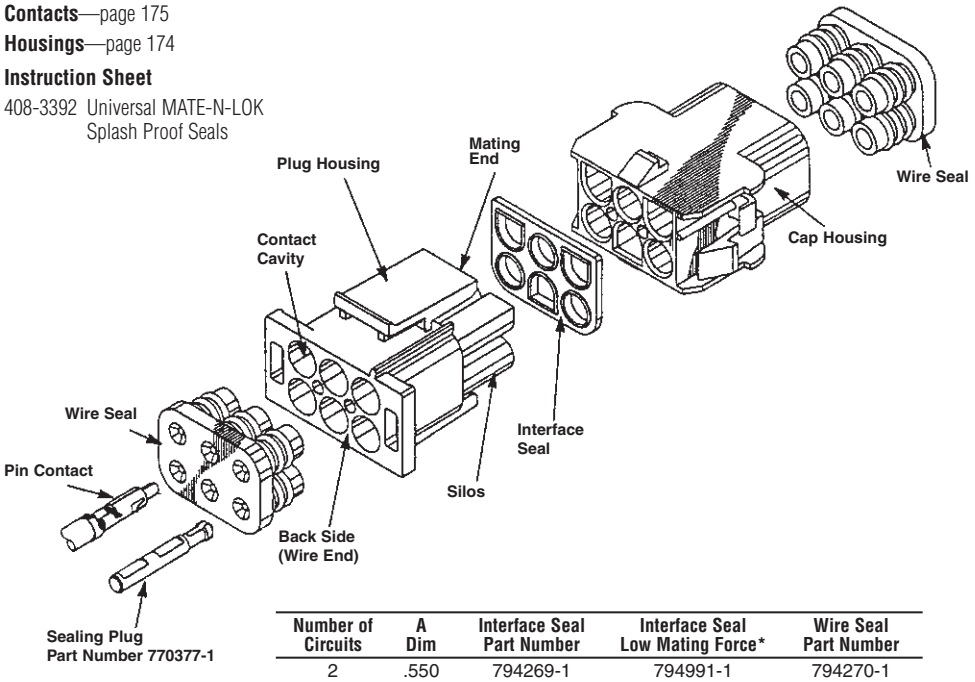

Number of Circuits	A Dim	Interface Seal Part Number	Interface Seal Low Mating Force*	Wire Seal Part Number
2	.550	794269-1	794991-1	794270-1
3	.800	794271-1	794992-1	794272-1
4	1.050	794273-1	—	794274-1
6	—	794275-1	794993-1	794276-1
9	.800	794277-1	794994-1	794278-1
12	1.050	794279-1	—	794280-1
15	1.300	794281-1	—	794282-1

Note: One interface seal and two wire seals required per mated assembly.
*Low mating force interface seals do not meet IP 5/6 IP 5/7 requirements.

Note: All part numbers are RoHS Compliant.

2, 3, 4 Circuit, In-Line

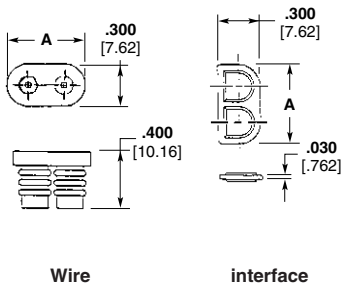

6 Circuit, Matrix

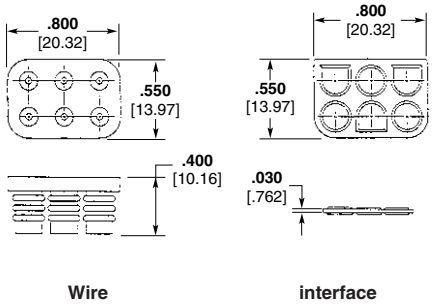

9, 12, and 15 Circuit, Matrix

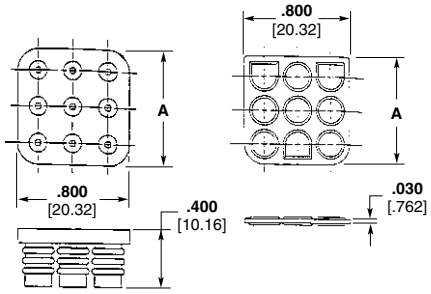

Catalog 82181
Revised 4-08
www.tycoelectronics.com

Dimensions are in inches and millimeters unless otherwise specified. Values in brackets are metric equivalents.

Dimensions are shown for reference purposes only. Specifications subject to change.

USA: 1-800-522-6752
Canada: 1-905-470-4425
Mexico: 01-800-733-8926
C. America: 52-55-1106-0803
South America: 55-11-2103-6000
Hong Kong: 852-2735-1628
Japan: 81-44-844-8013
UK: 44-8706-080-208

Universal MATE-N-LOK Sealed Connectors (Continued)

Contacts (used with Splash Proof Seals)

Solid pin diameter .084 [2.13]

Split pin diameter .086 [2.18]

Stock thickness .012 [.305] unless otherwise noted.

These contacts can be used in either Universal MATE-N-LOK Plug or Cap housings **only**.

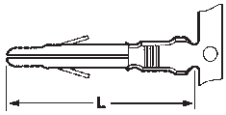

Solid Pin

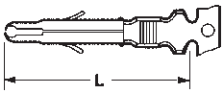

Split Pin

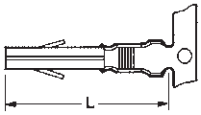

Socket

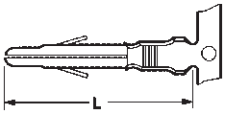

Grounding Pin

(.100 [2.54] longer than standard pin)

(Mate first, break last, not for interrupting current)

Related Product Data

Product Specification

108-1031 Universal MATE-N-LOK Connectors

Application Specification

114-1010 Universal MATE-N-LOK Contacts

Performance Characteristics— pages 169-170
Technical Documents— pages 169 and 205-206
Application Tooling— pages 207-210
Housings—page 174

Wire Size Range AWG [mm²]	Ins. Dia. Range	L Dim. Pin	L Dim. Socket	Material & Finish	Style	Contact Part Numbers Pin Strip Form	Pin Loose Piece	Socket Strip Form	Socket Loose Piece	HDM Applicator Part No.	Hand Tool Part No.
20-14 [.5-2.0]	**.060-.130** 1.52-3.30	**.790** 20.06	**.760** 19.30	Brass, Pre-tin	Solid	350218-1	350547-1	350536-1	350550-1	687763-1[3] 687763-2[3] 687763-6[3]	91500-1
				Brass, Gold[1]		350218-2	350547-2	350536-2	350550-2		
				Brass, Select Gold[2]		350218-7	350547-7	350536-7	350550-7		
				Phos. Brz., Pre-tin		350218-3	350547-3	350536-3	350550-3		
				Phos. Brz., Select Gold[2]		350218-6	350547-6	350536-6	350550-6		
				Brass, Pre-tin	Split	350687-1	350705-1	—	—		
				Brass, Gold[1]		350687-2	350705-2	—	—		
				Brass, Select Gold[2]		350687-7	350705-7	—	—		
		.890 22.60	—	Brass, Pre-Tin	Grounding	350654-1	350669-1				

[1]Gold Finish — Plated with .000030 [.000762] min. gold in mating area and inside wire barrel over .000050 [.00127] min. nickel underplate on entire contact.
[2]Select Gold Finish — Plated with .000030 [.000762] min. gold in mating area over .000050 [.00127] min. nickel underplate on entire contact.
[3]HDM Applicator part number ending in -1, is used on AMPOMATOR CLS Machine with T or G Terminators, -2 is used on AMP-O-LECTRIC Model K Machine, -4 & -6 are used on AMP-O-LECTRIC Model G Machine. See pages 207-210 for further information.

Notes:
1. Split pins recommended for use in housings having 6, 9, 12 and 15 circuits to reduce mating force.
2. Phosphor bronze material contacts are available for use in high temperature/humidity cycling applications, consult Tyco Electronics.
3. 18-24 AWG contacts (page 166) can be used with splash proof seals if insulation diameter range is .060-.100 [1.52-2.54].

Universal MATE-N-LOK II Keying Plug/Splash Proof Sealing Plug

IS 408-3392

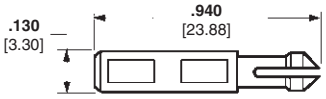

Part Number

UL94V-0 Nylon material — **770377-1**

Related Product Data

Housings— page 174
Technical Documents— pages 169 and 205-206

Seal Latch Tool
Part No. 794381-1
IS 408-3392

Contact Extraction Tool
Part No. 318851-1
IS 408-4371

Contact Insertion Tool (For inserting contacts applied to small diameter wire)
Part No. 91002-1
IS 408-7347

Note: All part numbers are RoHS Compliant.

Catalog 82181
Revised 4-08
www.tycoelectronics.com

Dimensions are in inches and millimeters unless otherwise specified. Values in brackets are metric equivalents.

Dimensions are shown for reference purposes only. Specifications subject to change.

USA: 1-800-522-6752
Canada: 1-905-470-4425
Mexico: 01-800-733-8926
C. America: 52-55-1106-0803
South America: 55-11-2103-6000
Hong Kong: 852-2735-1628
Japan: 81-44-844-8013
UK: 44-8706-080-208

Universal MATE-N-LOK Connectors

PC Board Vertical Pin Headers

.250 [6.35] Centerline spacing

Material

Housing — UL94V-2 Nylon, natural color
UL94V-0 Nylon

Contacts — Phosphor bronze

Solder tail diameter .062 [1.57]

Related Product Data

Product Specification

108-1053 Universal MATE-N-LOK PC Board Headers

Performance Characteristics— pages 169-170
Recommended PC Board Hole Layout— page 184
Technical Documents— pages 169 and 205-206

Mating Connectors

Universal MATE-N-LOK
Plug Housings — page 174

Universal MATE-N-LOK II
Plug Housings — pages 193-194

2, 3, 4, 5, 6 and 8 Circuit, In-Line

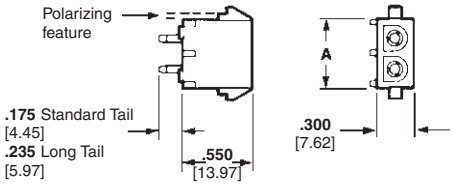

Number of Circuits	A Dim.	Flammability Rating	Pin Finish	Pin Header Part Numbers: Standard Tail[2]	Standard Tail Polarized[2]	Long Tail[3]	Mates with Plug Housing Part Number (Using Socket Contacts): Universal MATE-N-LOK	Universal MATE-N-LOK II
2	.550 13.97	UL94V-2	Pre-tin	350428-1	641963-1	350582-1	1-480698-0	—
			Duplex[1]	350428-4	641963-3	350582-4		
		UL94V-0	Pre-tin	350786-1	641964-1 / 1-641964-1[4]	350787-1	350777-1	770017-1
			Duplex[1]	350786-3	641964-3	350787-3		
3	.800 20.32	UL94V-2	Pre-tin	350429-1	641965-1	350583-1	1-480700-0	—
			Duplex[1]	350429-4	—	350583-4		
		UL94V-0	Pre-tin	350789-1	641966-1 / 1-641966-1[4]	350790-1	350766-1	770018-1
			Duplex[1]	350789-3	—	350790-3		
4	1.050 26.67	UL94V-2	Pre-tin	350430-1	641967-1	350584-1	1-480702-0	—
			Pre-tin	770351-1[5]	—	—		
			Duplex[1]	350430-4	—	350584-4		
		UL94V-0	Pre-tin	350792-1	641968-1	350793-1	350779-1	770019-1
			Duplex[1]	350792-3	—	350793-3		
5	1.300 33.02	UL94V-2	Pre-tin	640466-1	643405-1	—	1-480763-0	—
			Duplex[1]	640466-3	—	—		
		UL94V-0	Pre-tin	640900-1	643406-1	—	350809-1	770016-1
			Duplex[1]	640900-3	—	—		
6	1.550 39.37	UL94V-2	Pre-tin	641832-1	643407-1	—	640585-1	—
		UL94V-0	Pre-tin	641831-1	643408-1	—	640581-1	—
8	2.050 52.07	UL94V-2	Pre-tin	641825-1	—	770143-1	640586-1	—
		UL94V-0	Pre-tin	641828-1	643410-1	770272-1	640582-1	—
		UL94V-0	Duplex[1]	—	643410-3	770272-3	—	—

6, 9, 12 and 15 Circuit, Matrix

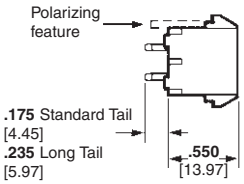

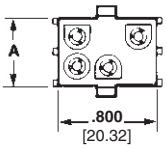

Number of Circuits	A Dim.	Flammability Rating	Pin Finish	Pin Header Part Numbers: Standard Tail[2]	Standard Tail Polarized[2]	Long Tail[3]	Mates with Plug Housing Part Number (Using Socket Contacts): Universal MATE-N-LOK	Universal MATE-N-LOK II
6	.550 13.97	UL94V-2	Pre-tin	350431-1	641969-1	350585-1	1-480704-0	—
					—	643749-1[5]		
			Duplex[1]	350431-4	—	350585-4		
		UL94V-0	Pre-tin	350711-1	641970-1 / 1-641970-1[4]	350732-1	350715-1	770020-1
			Duplex[1]	350711-4	641970-3	350732-4		
9	.800 20.32	UL94V-2	Pre-tin	350432-1	641971-1	350586-1	1-480706-0	—
			Duplex[1]	350432-4	641971-3	350586-4		
		UL94V-0	Pre-tin	350712-1	641972-1 / 1-641972-1[4]	350742-1	350720-1	770021-1
			Duplex[1]	350712-4	641972-3	350742-4		
12	1.050 26.67	UL94V-2	Pre-tin	350433-1	641973-1	350587-1	1-480708-0	—
			Duplex[1]	350433-4	—	350587-4		
		UL94V-0	Pre-tin	350713-1	641974-1 / 1-641974-1[4]	350737-1	350735-1	770022-1
			Duplex[1]	350713-4	641974-3	350737-4		
15	1.300 33.02	UL94V-2	Pre-tin	350434-1	641975-1	350588-1	1-480710-0	—
			Duplex[1]	350434-4	—	350588-4		
		UL94V-0	Pre-tin	350714-1	641976-1	350738-1	350736-1	770023-1
			Duplex[1]	350714-4	641976-4	350738-4		

Note: Header Housings on pages 182-185 are available in **colors** listed on page 188. Call Technical Support for exact Part Numbers.

[1]Duplex Finish — Plated with .000030 [.000762] min. gold in mating area, matte tin on solder tail end over .000050 [.00127] min. nickel underplate on entire contact.
[2]Use Standard Tail for .062 [1.57] thick PC Board. [3]Use Long Tail for .125 [3.18] thick PC Board.
[4]Black in color. [5]No drain holes, used w/ seals, page 180. **Note: All part numbers are RoHS Compliant.**

Dimensions are in inches and millimeters unless otherwise specified. Values in brackets are metric equivalents.

Dimensions are shown for reference purposes only. Specifications subject to change.

USA: 1-800-522-6752
Canada: 1-905-470-4425
Mexico: 01-800-733-8926
C. America: 52-55-1106-0803
South America: 55-11-2103-6000
Hong Kong: 852-2735-1628
Japan: 81-44-844-8013
UK: 44-8706-080-208

Universal MATE-N-LOK Connectors (Continued)

PC Board Vertical Socket Headers

.250 [6.35] Centerline spacing

Material

Housing —
UL94V-2 Nylon, natural color
UL94V-0 Nylon

Contacts — Phosphor bronze

Solder tail diameter .062 [1.57]

Related Product Data

Product Specification

108-1053 Universal MATE-N-LOK PC Board Headers

Performance Characteristics— pages 169-170
Recommended PC Board Hole Layout— page 184
Technical Documents— pages 169 and 205-206

Mating Connectors

Universal MATE-N-LOK
Plug Housings — page 174

Universal MATE-N-LOK II
Plug Housings — pages 193-194

2, 3, 4, 5, and 6 Circuit, In-Line

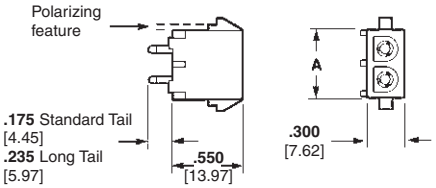

Number of Circuits	A Dim.	Flammability Rating	Socket Finish	Socket Header Part Numbers: Standard Tail[2]	Standard Tail Polarized[2]	Long Tail[3]	Mates with Plug Housing Part Number (Using Pin Contacts): Universal MATE-N-LOK	Universal MATE-N-LOK II
2	.550 13.97	UL94V-2	Pre-tin	350759-4	643411-1	350986-4	1-480698-0	—
			Duplex[1]	350759-5	—	—		
		UL94V-0	Pre-tin	350824-1	643412-1	350831-1	350777-1	770017-1
			Duplex[1]	350824-4	643412-3	—		
3	.800 20.32	UL94V-2	Pre-tin	350760-4	643413-1	350987-4	1-480700-0	—
			Duplex[1]	350760-5	—	—		
		UL94V-0	Pre-tin	350825-1	643414-1	350832-1	350766-1	770018-1
			Duplex[1]	350825-4	643414-3	350832-4		
4	1.050 26.67	UL94V-2	Pre-tin	350761-4	643415-1	350988-4	1-480702-0	—
			Duplex[1]	350761-5	—	350988-5		
		UL94V-0	Pre-tin	350826-1	643416-1	350833-1	350779-1	770019-1
			Duplex[1]	350826-4	—	350833-4		
5	1.300 33.02	UL94V-2	Pre-tin	640467-1	—	—	1-480763-0	—
			Pre-tin	640467-3	—	—		
		UL94V-0	Pre-tin	640901-1	—	—	350809-1	770016-1
			Duplex[1]	640901-3	—	—		
6	1.550 39. 37	UL94V-0	Duplex[1]	770262-3	—	—	640581-1	—

6, 9, 12 and 15 Circuit, Matrix

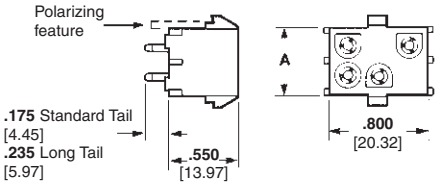

Number of Circuits	A Dim.	Flammability Rating	Socket Finish	Socket Header Part Numbers: Standard Tail[2]	Standard Tail Polarized[2]	Long Tail[3]	Mates with Plug Housing Part Number (Using Pin Contacts): Universal MATE-N-LOK	Universal MATE-N-LOK II
6	.550 13.97	UL94V-2	Pre-tin	350762-4	643423-1	350989-4	1-480704-0	—
			Duplex[1]	350762-5	—	350989-5		
		UL94V-0	Pre-tin	350827-1	643424-1	350834-1	350715-1	770020-1
			Duplex[1]	350827-4	643424-3	350834-4		
9	.800 20.32	UL94V-2	Pre-tin	350763-4	643425-1	350990-4	1-480706-0	—
			Duplex[1]	350763-5	—	350990-5		
		UL94V-0	Pre-tin	350828-1	643426-1	350835-1	350720-1	770021-1
			Duplex[1]	350828-4	643426-3	350835-4		
12	1.050 26.67	UL94V-2	Pre-tin	350764-4	—	350991-4	1-480708-0	—
			Duplex[1]	350764-5	—	350991-5		
		UL94V-0	Pre-tin	350829-1	643428-1	350836-1	350735-1	770022-1
			Duplex[1]	350829-4	—	350836-4		
15	1.300 33.02	UL94V-2	Pre-tin	350765-4	643429-1	350992-4	1-480710-0	—
			Duplex[1]	350765-5	—	—		
		UL94V-0	Pre-tin	350830-1	643430-1	350837-1	350736-1	770023-1
			Duplex[1]	350830-4	—	350837-4		

[1]Duplex Finish — Plated with .000030 [.000762] min. gold in mating area, matte tin on solder tail end over .000050 [.00127] min. nickel underplate on entire contact.
[2]Use Standard Tail for .062 [1.57] thick PC Board.
[3]Use Long Tail for .125 [3.18] thick PC Board.

Note: All part numbers are RoHS Compliant.

Note: Header Housings on pages 182-185 are available in **colors** listed on page 188. Call Technical Support for exact Part Numbers.

Dimensions are in inches and millimeters unless otherwise specified. Values in brackets are metric equivalents.

Dimensions are shown for reference purposes only. Specifications subject to change.

USA: 1-800-522-6752
Canada: 1-905-470-4425
Mexico: 01-800-733-8926
C. America: 52-55-1106-0803
South America: 55-11-2103-6000
Hong Kong: 852-2735-1628
Japan: 81-44-844-8013
UK: 44-8706-080-208

Universal MATE-N-LOK Connectors (Continued)

Recommended PC Board Hole Layouts for Pin and Socket Vertical Headers

Related Product Data

Vertical Headers—pages 182-183

2, 3, 4, 5, 6 and 8 Circuit, In-Line

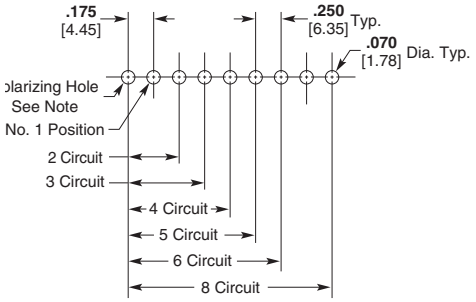

6, 9, 12 and 15 Circuit, Matrix

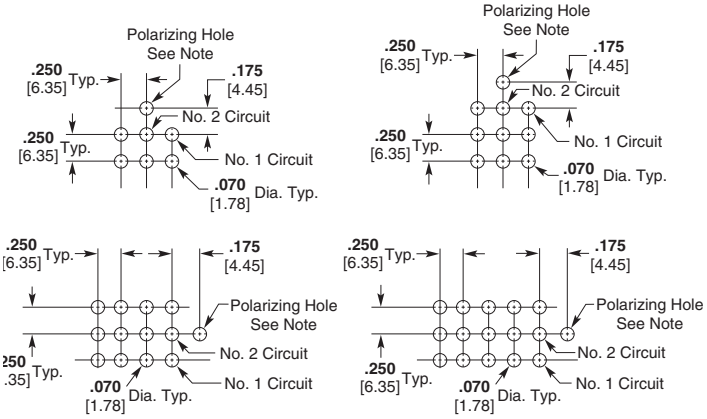

Note: Polarizing hole **.070** [1.78] Dia. required for polarized headers only.

PC Board Vertical Pin Headers with ACTION PIN Contacts

Material and Finish

Housing — PBT, black

Flammability Rating — UL94V-0

Contacts — Copper alloy, plated with tin over nickel on entire contact

Related Product Data

Performance Characteristics—pages 169-170
Technical Documents — pages 169 and 205-206

Product Specification
108-5222 ACTION PIN Universal MATE-N-LOK Header Assembly

Mating Connectors

Universal MATE-N-LOK
Plug Housings — page 174

Universal MATE-N-LOK II
Plug Housings — pages 193-194

Note: Header Housings on pages 182-185 are available in **colors** listed on page 188. Call Technical Support for exact Part Numbers.

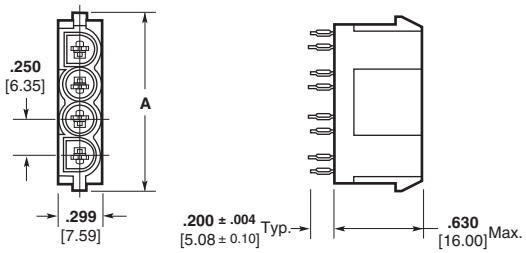

Number of Circuits	A Dim.	Part Number	Mates with Plug Housing Part Number (Using Socket Contacts)	
			Universal MATE-N-LOK	Universal MATE-N-LOK II
2	**.750** 19.05	173924-1	1-480698-0 350777-1	770017-1
3	**1.000** 25.40	173925-1	1-480700-0 350766-1	770018-1
4	**1.250** 31.75	173926-1	1-480702-0 350779-1	770019-1

Note: Install in PC Board with arbor tool.
Note: All part numbers are RoHS Compliant.

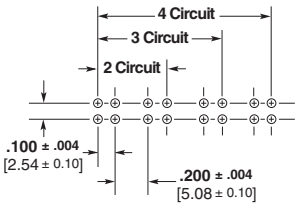

Recommended PC Board Hole Layout

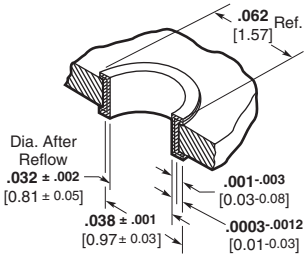

PC Board Hole Dimensions

Universal MATE-N-LOK Connectors (Continued)

PC Board Right-Angle Pin and Socket Headers

.250 [6.35] Centerline spacing

Material

Housing — Nylon

Contacts — Phosphor bronze

Solder tail width .052 [1.32]

Related Product Data

Product Specification

108-1053 Universal MATE-N-LOK PC Board Headers

Performance Characteristics— pages 169-170

Technical Documents— pages 169 and 205-206

Mating Connectors

Universal MATE-N-LOK

Plug Housings — page 174

Universal MATE-N-LOK II

Plug Housings — pages 193-194

Note: Header Housings on pages 182-185 are available in **colors** listed on page 188. Call Technical Support for exact Part Numbers.

2, 3, 4, 5, 6 and 8 Circuit, In-line

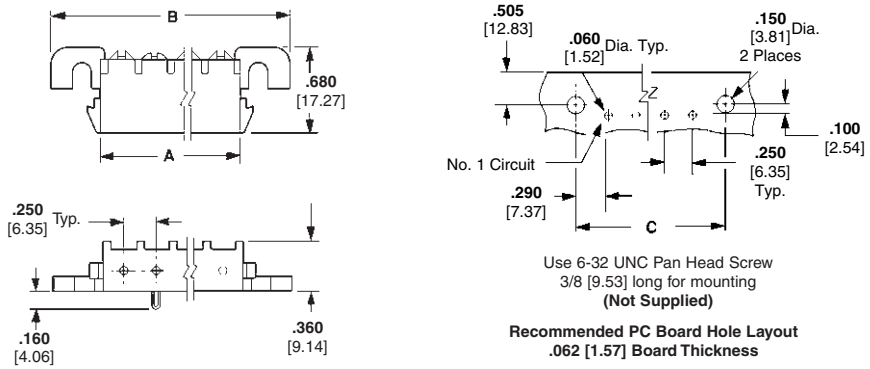

Use 6-32 UNC Pan Head Screw 3/8 [9.53] long for mounting **(Not Supplied)**

Recommended PC Board Hole Layout
.062 [1.57] Board Thickness

No. of Circuits	Dimensions A	Dimensions B	Dimensions C	Contact Finish	Right-Angle Header Part Numbers: UL94V-2 Pin	UL94V-2 Socket	UL94V-2 Mates with	UL94V-0 Pin	UL94V-0 Socket	UL94V-0 Mates with: Universal MATE-N-LOK	UL94V-0 Mates with: Universal MATE-N-LOK II
2	**.550** 13.97	**1.245** 31.62	**.830** 21.08	Pre-tin	—	—	—	1-350942-0	643226-1	350777-1	770017-1
								770994-1[2]	—		
				Duplex[1]	—	—	—	3-350942-0	—		
3	**.800** 20.32	**1.495** 37.97	**1.080** 27.43	Pre-tin	—	—	—	1-350943-0	643228-1	350766-1	770018-1
				Duplex[1]	—	—		3-350943-0	3-643228-0		
4	**1.050** 26.67	**1.745** 44.32	**1.330** 33.78	Pre-tin	1-350948-0	—	1-480702-0	1-350944-0	643230-1	350779-1	770019-1
				Duplex[1]	—	—		3-350944-0	3-643230-0		
5	**1.300** 33.02	**1.995** 50.67	**1.580** 40.13	Pre-tin	1-350949-0	—	1-480763-0	1-350945-0	643232-1	350809-1	770016-1
				Duplex[1]	—	—		3-350945-0	3-643232-0		
6	**1.550** 39.37	**2.245** 57.02	**1.830** 46.48	Pre-tin	640587-1	643235-1	640585-1	640583-1	643234-1	640581-1	—
				Duplex[1]	—			640583-3	3-643234-0		
8	**2.050** 52.07	**2.745** 69.72	**2.330** 59.18	Pre-tin	—	643237-1	640586-1	640584-1	643236-1	640582-1	—
				Duplex[1]	—			640584-3	3-643236-0		

[1]Duplex Finish — Plated with .000030 [.000762] min. gold in mating area, matte tin on solder tail end over .000050 [.00127] min. nickel underplate on entire contact. [2]Black in color.

Test Connectors (with spring loaded contacts)

Material

Housing — Nylon

Flammability Rating — UL94V-0

Related Product Data

Mating Connectors — Housings and headers having the same number of circuits. The housings can have pin or socket contacts, or a combination of both.

Mating Housings — page 174

Mating Headers — pages 182-185

Other Mating Connectors

Universal MATE-N-LOK II Housings— pages 193-194

Notes:

1. Test probes have 5 amp maximum current rating. 1,000,000 cycles.
2. Test Connector housings are of the same configuration as standard housings. Refer to page 23 for dimensional specifications.

2, 3, 4 and 5 Circuit, In-Line

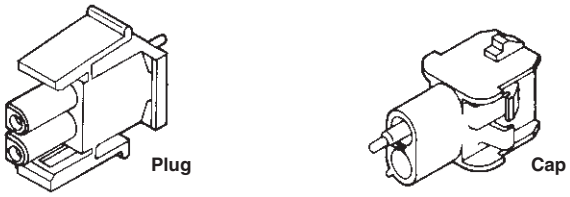

6, 9, 12 and 15 Circuit, Matrix

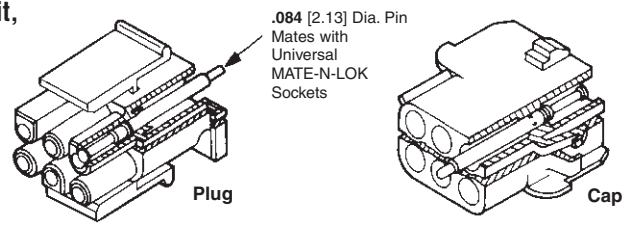

Number of Circuits	Part Numbers: Plug	Part Numbers: Cap
2	350848-2	350849-2
3	350848-3	350849-3
4	350848-4	350849-4
5	350848-5	350849-5
6	350848-6	350849-6
9	350848-9	350849-9
12	1-350848-2	1-350849-2
15	1-350848-5	1-350849-5

Note: All part numbers are RoHS Compliant.

Dimensions are in inches and millimeters unless otherwise specified. Values in brackets are metric equivalents.

Dimensions are shown for reference purposes only. Specifications subject to change.

USA: 1-800-522-6752
Canada: 1-905-470-4425
Mexico: 01-800-733-8926
C. America: 52-55-1106-0803
South America: 55-11-2103-6000
Hong Kong: 852-2735-1628
Japan: 81-44-844-8013
UK: 44-8706-080-208

Universal MATE-N-LOK Circular Connectors

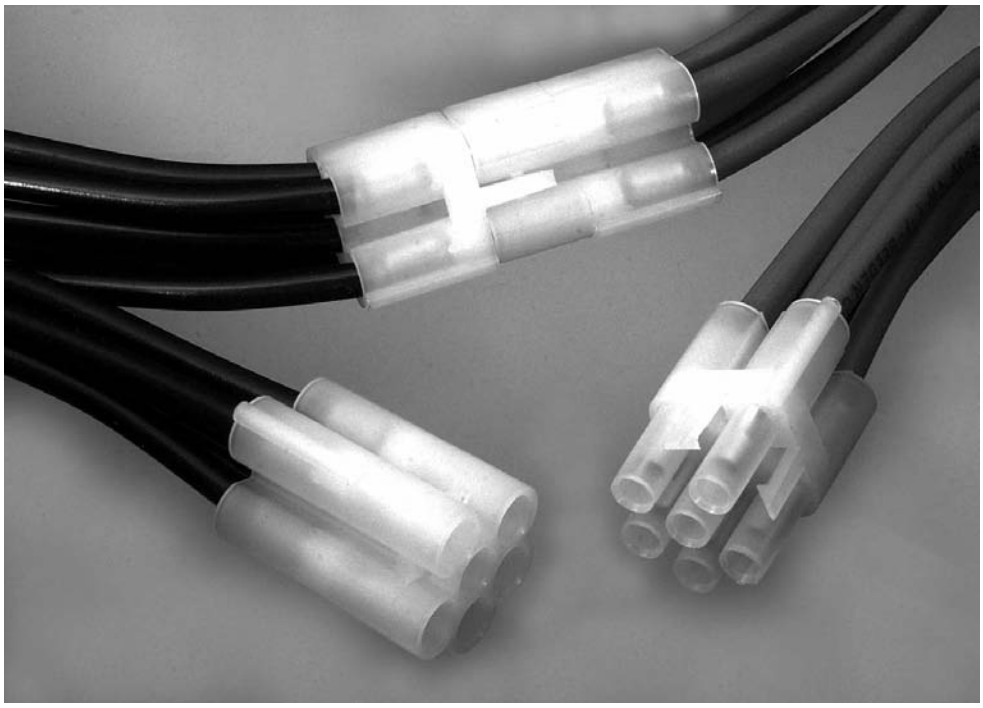

Product Facts

- **Unique product designed to accommodate the specific needs of the lighting industry**
- **Circular design allows the connector to pass through 7/8 inch knock-out holes in electrical fixtures and boxes**
- **6-position accommodates most major electrical industry requirements**
- **Universal MATE-N-LOK connector centerline spacing maintains UL and CSA approvals**
- **Uses standard Universal MATE-N-LOK contacts and application tooling**
- **Positive polarized housing helps prevent incorrect mating**
- **UL Recognized, File No. E28476**
- **CSA Certified, File No. LR7189**

Applications

- **Primary applications are in the Lighting, Vending, and Appliance industries**
- **Applications where use of a completed harness that will pass through a 7/8 inch knock-out is required**
- **Provides the capability to quickly disconnect individual fixtures from sensitive environmental areas and perform maintenance at other sites**
- **Not for interrupting current**

Performance Characteristics

Voltage—600 V AC or DC

Current—20 amps maximum per UL-1977 (6 position, fully energized)

Dielectric Withstanding Voltage—5 KVAC or KVDC

Insulation Resistance—1000 MΩ max. between adjacent circuits

Durability—50 cycles mating and unmating

Contact Retention—15 lb. minimum per contact

Technical Documents

Product Specification
108-2069 Universal MATE-N-LOK Circular Connector

Application Specification
114-1010 Universal MATE-N-LOK Connectors

Catalog 82181
Revised 4-08
www.tycoelectronics.com

Dimensions are in inches and millimeters unless otherwise specified. Values in brackets are metric equivalents.

Dimensions are shown for reference purposes only. Specifications subject to change.

USA: 1-800-522-6752
Canada: 1-905-470-4425
Mexico: 01-800-733-8926
C. America: 52-55-1106-0803
South America: 55-11-2103-6000
Hong Kong: 852-2735-1628
Japan: 81-44-844-8013
UK: 44-8706-080-208

Universal MATE-N-LOK Circular Connectors (Continued)

Plug
Part No. 794911-1

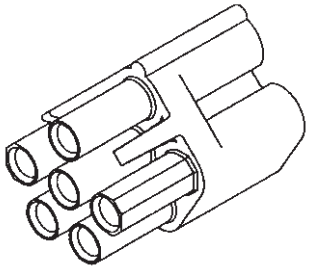

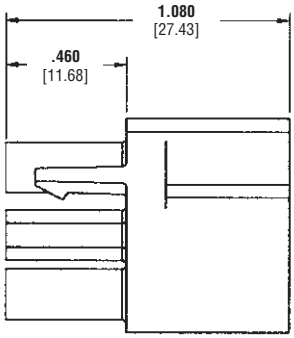

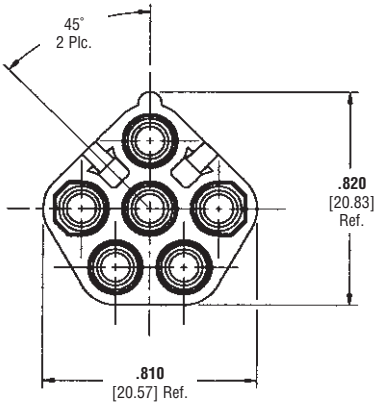

Cap
Part No. 794912-1

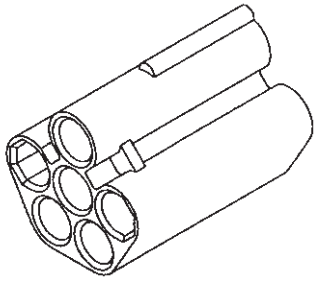

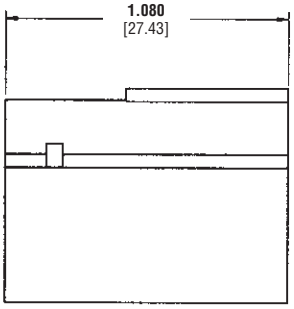

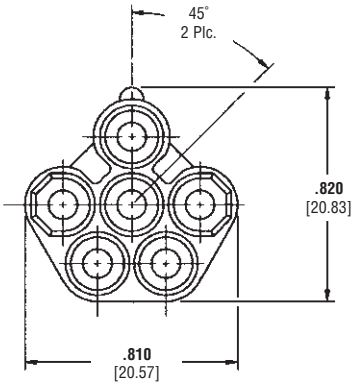

Material and Finish
Housings—Nylon, UL 94V-2 rated

Related Product Data
Contacts—pages 172-173

Note: **All part numbers are RoHS Compliant.**

Catalog 82181
Revised 4-08
www.tycoelectronics.com

Dimensions are in inches and millimeters unless otherwise specified. Values in brackets are metric equivalents.

Dimensions are shown for reference purposes only. Specifications subject to change.

USA: 1-800-522-6752
Canada: 1-905-470-4425
Mexico: 01-800-733-8926
C. America: 52-55-1106-0803
South America: 55-11-2103-6000
Hong Kong: 852-2735-1628
Japan: 81-44-844-8013
UK: 44-8706-080-208

Universal MATE-N-LOK Connectors — Available in Colors

Note: See corresponding Universal MATE-N-LOK Plug and Cap Housing Base Part Numbers on page 175.

Header Housings on pages 182-185 are also available in **colors**. Call Technical Support for exact Part Numbers.

Base Part Number	No. of Circuits	Housing	Material
480698	2	Plug	V-2
480699	2	Cap	V-2
480700	3	Plug	V-2
480701	3	Cap	V-2
480702	4	Plug	V-2
480703	4	Cap	V-2
480763*	5	Plug*	V-2
480764*	5	Cap*	V-2
480704	6	Plug	V-2
480705	6	Cap	V-2
480706	9	Plug	V-2
480707	9	Cap	V-2
480708	12	Plug	V-2
480709	12	Cap	V-2
480710	15	Plug	V-2
480711	15	Cap	V-2
350777	2	Plug	V-0
350778	2	Cap	V-0
350766	3	Plug	V-0
350767	3	Cap	V-0
350799	4	Plug	V-0
350780	4	Cap	V-0
350809	5	Plug	V-0
350810	5	Cap	V-0
350715	6	Plug	V-0
350781	6	Cap	V-0
350720	9	Plug	V-0
350782	9	Cap	V-0
350735	12	Plug	V-0
350783	12	Cap	V-0
350736	15	Plug	V-0
350784	15	Cap	V-0

Dash Number	Color
1-xxxxxx-0	Natural
1-xxxxxx-1	Brown
1-xxxxxx-2	Red
1-xxxxxx-3	Orange
1-xxxxxx-4	Yellow
1-xxxxxx-5	Green
1-xxxxxx-6	Blue
1-xxxxxx-8	Gray
1-xxxxxx-9	Black

*** Special for Base Part Numbers 480763 and 480764**

Dash Number	Color
xxxxxx-1	Natural
1-xxxxxx-1	Brown
1-xxxxxx-2	Red
1-xxxxxx-3	Orange
1-xxxxxx-4	Yellow
1-xxxxxx-5	Green
1-xxxxxx-6	Blue
1-xxxxxx-8	Gray
1-xxxxxx-9	Black

Universal MATE-N-LOK II Connectors

Product Facts

- High reliability
- For use where repair or replacement would be difficult
- Pins and sockets can be intermixed in the same housing
- Available in 2 through 15 circuit sizes for free-hanging or panel mount wire-to-wire connection
- Mate with standard Universal MATE-N-LOK Housings and PC Board Headers
- Uses standard Universal MATE-N-LOK panel cutouts and strain reliefs
- Polarized housings available in UL94V-0 flammability rated material
- Enclosed contacts for shock protection
- F-Crimp terminals accept 30-10 AWG [.05 -5.0 mm^2] wire sizes
- Contacts available in strip and loose form
- Lanceless contacts for tangle-free handling
- Insulation capability to .200 [5.08] diameter
- Connector design provides for complete contact insertion
- Three-point stabilization precisely controls contact alignment, minimizing stubbing
- Tin or duplex gold plated contacts
- Contacts are on .250 [6.35] centerline spacing
- Not for interrupting current
- Recognized under the Component Program of Underwriters Laboratories Inc., File No. E28476
- Certified by Canadian Standards Association, File No. LR 7189
- Passed test by VDE under their Registration Number 3980/Continuous Surveillance

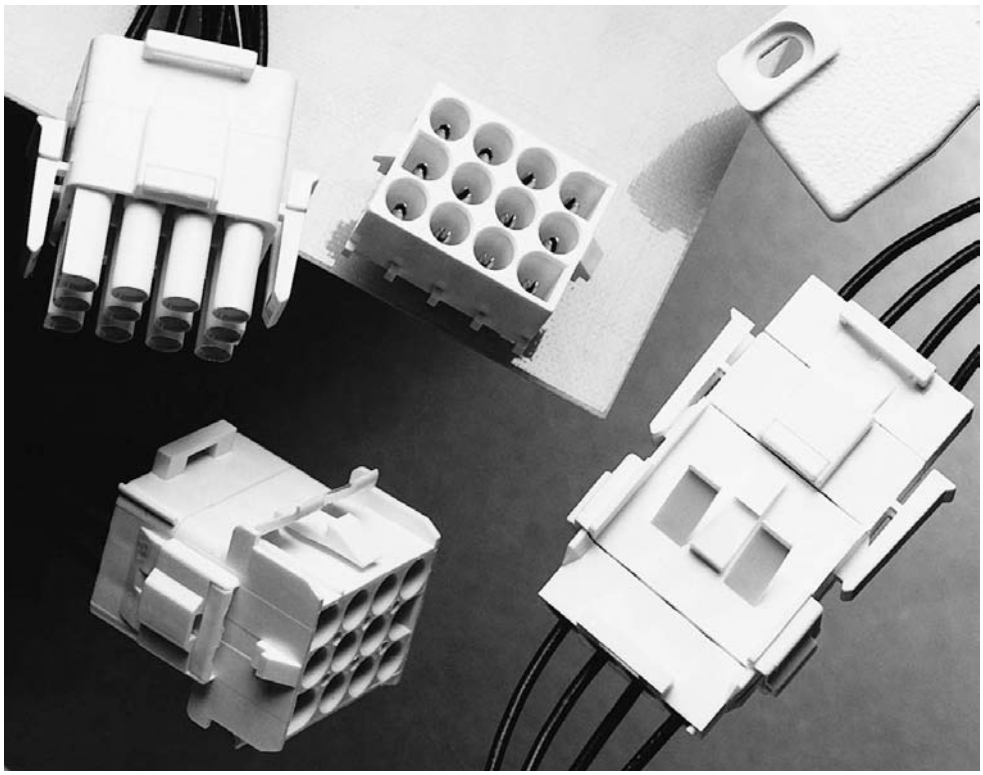

Performance Characteristics

The Universal MATE-N-LOK II Connector performance characteristics found on pages 189-190 are based on free-hanging and panel mount connectors, loaded with contacts crimped on stranded wire.

Dielectric Withstanding Voltage—5.0 KV AC or DC between adjacent circuits initially

Insulation Resistance—1000 megohms minimum between adjacent circuits

Voltage Rating—600 V AC or DC

Connector Mating—Split Pin—1.5 lb. max. per circuit

Connector Unmating—Split Pin—.5 lb. min. per circuit

Contact Insertion Force—3.0 lb. max. per contact unassembled

Contact Retention—35 lb. min. per contact

Durability—50 cycles, mating and unmating

Technical Documents

Product Specification

108-1090 Universal MATE-N-LOK II Connectors

Application Specification

114-1043 Universal MATE-N-LOK II Connectors

Instruction Sheet

408-3200 Housing, Contacts and Accessories

Catalog 82181
Revised 4-08
www.tycoelectronics.com

Dimensions are in inches and millimeters unless otherwise specified. Values in brackets are metric equivalents.

Dimensions are shown for reference purposes only. Specifications subject to change.

USA: 1-800-522-6752
Canada: 1-905-470-4425
Mexico: 01-800-733-8926
C. America: 52-55-1106-0803
South America: 55-11-2103-6000
Hong Kong: 852-2735-1628
Japan: 81-44-844-8013
UK: 44-8706-080-208

Universal MATE-N-LOK II Connectors (Continued)

Performance Characteristics (Continued)

Maximum Current—Maximum current rating of Universal MATE-N-LOK II connectors is limited by the maximum operating temperature of the housings which is 120°C including the temperature rise of the contacts which is a maximum of 30°C. There are several variables which have a direct effect on this maximum current-carrying capability for a given connector and must be considered for each application. These variables are:

Wire Size—Larger diameter wire will carry more current since it has less internal resistance to current flow and thus generates less heat. Longer wire lengths also enhance current carrying capabilities since the wire conducts heat away from the connector.

Connector Size—In general, the more circuits in a connector, the less current can be carried.

Ambient Temperature—The higher the ambient temperature, the less current can be carried in any given connector.

Universal MATE-N-LOK II connectors also will withstand the following tests:

Vibration—10-55-10 cycles per minute at .06 inch total excursion

Physical Shock—18 drops, 50 g sawtooth at 10 milliseconds

Housing Panel Retention—75 lb. min.

Housing Lock Strength—35 lb. min.

Thermal Shock— -55°C to +85°C

Temperature-Humidity Cycling—25°C to 65°C at 95 RH

Corrosion—48 hr. at 5% salt concentration

Related Product Data

Product Specification

108-1090 Universal MATE-N-LOK II Connectors

Current Rating Verification for 30°C Maximum Temperature Rise 100% Energized

Wire-to-Wire

Calculated Current Table

Number of Circuits	Wire Gauge									
	10	12	14	16	18	20	22	24	26	30
2	19.00	18.00	17.00	14.50	13.00	10.00	8.00	6.50	5.50	3.50
3	17.50	16.50	15.50	13.00	12.00	9.00	7.50	6.00	5.00	3.00
4	16.50	15.50	15.00	12.50	11.00	8.50	7.00	5.50	4.50	3.00
5	16.00	15.00	14.00	12.00	10.50	8.00	6.50	5.50	4.50	3.00
6 Matrix	15.00	14.00	13.00	11.00	9.50	7.50	6.00	5.00	4.00	2.50
8	14.50	14.00	13.00	10.50	9.50	7.50	6.00	5.00	4.00	2.50
9	13.50	12.50	11.50	9.50	8.50	6.50	5.50	4.50	3.50	2.00
10	14.00	13.00	12.50	10.00	9.00	7.00	5.50	4.50	3.50	2.50
12	12.50	12.00	11.00	9.00	8.00	6.00	5.00	4.00	3.00	2.00
15	12.00	11.50	10.00	8.50	7.50	6.00	4.50	4.00	3.00	2.00

Values are based on initial Temperature Rise versus Current Testing and are intended to be a guide in the selection of a connector family. All applications should be tested by the end user. The values listed are per circuit for fully loaded housings being 100% energized. **Note:** All combinations were not tested, and this chart contains interpolated and extrapolated values.

Minimum Wire Lengths for T-Rise vs. Current Testing

AWG	Min. Length (in.)	AWG	Min. Length (in.)
30	2.6	18	9.4
28	3.2	16	11.3
26	4.1	14	13.7
24	5.1	12	16.4
20	7.8	10	19.3

Note: If wire lengths used are less than those listed above, the current carrying ability of the system will be reduced due to less heat being conducted away from the connector. The customer should fully test all applications.

Wire-to-Board

Due to the vast differences in trace geometry and printed circuit board configurations, we are unable to provide a separate current carrying chart for our printed circuit board header products. However, the above Wire-to-Wire charts may be used as a guideline for headers if the trace width and thickness is equal to the listed wire gauge. For vertical headers, only 95% of the Wire-to-Wire value should be used. For right-angle headers, only 75% of the Wire-to-Wire value should be used. The chart values are only a tool for connector selection and will require the customer to fully test their application.

Termination Resistance/Contact Crimp Tensile Force

Wire Size		Termination Resistance		Contact Crimp Tensile Force	
AWG	mm²	Test Current (Amps)	Resistance Milliohms (Max. Init.)	Force (Min.) lbs.	Force (Min.) N
30	.05	—	—	1.5	7
28	.08	—	—	3	13
26	.12	—	—	5	22
24	.2	1.5	3.50	7	31
22	.3	3	3.50	12	53
20	.5	4.5	3.00	17	66
18	.8	6	3.00	30	133
16	1.2	8	2.75	45	200
14	2.0	10	2.75	50	222
12	3.0	—	—	60	267
10	5.0	—	—	70	311

Note: This is the total resistance between wire crimps of a mated pin and socket.

Catalog 82181
Revised 4-08
www.tycoelectronics.com

Dimensions are in inches and millimeters unless otherwise specified. Values in brackets are metric equivalents.

Dimensions are shown for reference purposes only. Specifications subject to change.

USA: 1-800-522-6752
Canada: 1-905-470-4425
Mexico: 01-800-733-8926
C. America: 52-55-1106-0803
South America: 55-11-2103-6000
Hong Kong: 852-2735-1628
Japan: 81-44-844-8013
UK: 44-8706-080-208

Universal MATE-N-LOK II Connectors (Continued)

Universal MATE-N-LOK II Connector Mating Combinations

Connector Part Number				Mating Connector Part Number									
						PC Board Headers							
						Vertical Pin[2]			Vertical Socket[2]			Right-Angle[2]	
Number of Circuits	Flammability Rating	Style	Plug Kit Part Number[2]	Cap Kit Part Number[2]	Plating	Standard Tail	Standard Tail Polarized	Long Tail	Standard Tail	Standard Tail Polarized	Long Tail	Pin	Socket
2	UL94V-0	In-Line	770017-1	770024-1	Pre-tin	350786-1	641964-1	350787-1	350824-1	643412-1	350831-1	1-350942-0	643226-1
					Duplex[1]	350786-3	641964-3	350787-3	350824-4	643412-3	—	3-350942-0	—
3	UL94V-0	In-Line	770018-1	770025-1	Pre-tin	350789-1	641966-1	350790-1	350825-1	643414-1	350832-1	1-350943-0	643228-1
					Duplex[1]	350789-3	—	350790-3	350825-4	643414-3	350832-4	3-350943-0	3-643228-0
4	UL94V-0	In-Line	770019-1	770026-1	Pre-tin	350792-1	641968-1	350793-1	350826-1	643416-1	350833-1	1-350944-0	643230-1
					Duplex[1]	350792-3	—	350793-3	350826-4	—	350833-4	3-350944-0	3-643230-0
5	UL94V-0	In-Line	770016-1	—	Pre-tin	640900-1	643406-1	—	640901-1	—	—	1-350945-0	643232-1
					Duplex[1]	640900-3	—	—	640901-3	—	—	3-350945-0	3-643232-0
6	UL94V-0	Matrix	770020-1	770027-1	Pre-tin	350711-1	641970-1	350732-1	350827-1	643424-1	350834-1	—	—
					Duplex[1]	350711-4	641970-3	350732-4	350827-4	643424-3	350834-4	—	—
9	UL94V-0	Matrix	770021-1	770028-1	Pre-tin	350712-1	641972-1	350742-1	350828-1	643426-1	350835-1	—	—
					Duplex[1]	350712-4	641972-3	350742-4	350828-4	643426-3	350835-4	—	—
12	UL94V-0	Matrix	770022-1	770029-1	Pre-tin	350713-1	641974-1	350737-1	350829-1	643428-1	350836-1	—	—
					Duplex[1]	350713-4	641974-3	350737-4	350829-4	—	350836-4	—	—
15	UL94V-0	Matrix	770023-1	770030-1	Pre-tin	350714-1	641976-1	350738-1	350830-1	643430-1	350837-1	—	—
					Duplex[1]	350714-4	641976-4	350738-4	350830-4	—	350837-4	—	—

[1]Duplex Finish — Plated with .000030 [.000762] min. gold in mating area, matte tin on solder tail end over .000050 [.00127] min. nickel underplate on entire contact.
[2]Universal MATE-N-LOK II Plug and Cap housings accept pin or socket contacts. Use the appropriate contacts in the Plug housing as required by the mating component.

Note: All part numbers are RoHS Compliant.

Catalog 82181
Revised 4-08
www.tycoelectronics.com

Dimensions are in inches and millimeters unless otherwise specified. Values in brackets are metric equivalents.

Dimensions are shown for reference purposes only. Specifications subject to change.

USA: 1-800-522-6752
Canada: 1-905-470-4425
Mexico: 01-800-733-8926
C. America: 52-55-1106-0803
South America: 55-11-2103-6000
Hong Kong: 852-2735-1628
Japan: 81-44-844-8013
UK: 44-8706-080-208

Universal MATE-N-LOK II Connectors (Continued)

Contacts

Split pin diameter .086 [2.18]

Stock thickness .012 [.305]

These contacts can be used in either Universal MATE-N-LOK II Plug or Cap housings.

Related Product Data

Product Specification

108-1090 Universal MATE-N-LOK II Connectors

Application Specification

114-1043 Universal MATE-N-LOK II Contacts

Performance Characteristics— pages 189-190
Housings— pages 193-194
Technical Documents— pages 189 and 205-206
Application Tooling— pages 207-210

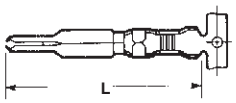

Pin

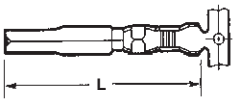

Socket

Wire Size Range AWG [mm²]	Ins. Dia. Range	L Dim. Pin	L Dim. Socket	Material & Finish	Contact Part Numbers Pin Strip Form	Contact Part Numbers Pin Loose Piece	Contact Part Numbers Socket Strip Form	Contact Part Numbers Socket Loose Piece	HDM Applicator Part No.	Hand Tool Part No.
30-26 [.05-.12]	**.032-.057** .813-1.45	**1.005** 25.53	**.980** 24.90	Phos. Brz. Gold[1]	770011-6	770512-6	770012-6	770416-6	567252-1[6] 567252-4[6]	58439-1
24-18 [.2-.8]	**.040-100** 1.02-2.54	**1.005** 25.53	**.980** 24.90	Brass. Pre-tin	770009-1	770252-1	—	—	567214-1[6] 567214-2[6] 567214-4[6]	91510-1
				Brass. Duplex[2]	1-770009-0	1-770252-0	—	—		
				Phos. Brz. Pre-tin	—	—	770010-3	770253-3		
				Phos. Brz. Duplex[2]	—	—	1-770010-0	1-770253-0		
20-14 [.5-2.0]	**.060-.130** 1.52-3.30	**1.005** 25.53	**.980** 24.90	Brass. Pre-tin	770007-1	770250-1	—	—	567213-1[6] 567213-2[6] 567213-4[6]	91500-1
				Brass. Duplex[2]	1-770007-0	1-770250-0	—	—		
				Phos. Brz. Pre-tin	—	—	770008-3	770251-3		
				Phos. Brz. Duplex[2]	—	—	1-770008-0	1-770251-0		
	.130-.200 3.30-5.08	**.995** 25.27	**.970** 24.63	Brass. Pre-tin	770005-1	770248-1	—	—	567212-1[6] 567212-2[6] 567212-4[6]	91508-1[4] 91506-1[4]
				Brass. Duplex[2]	1-770005-0	1-770248-0	—	—		
				Phos. Brz. Pre-tin	770005-3	—	770006-3	770249-3		
				Phos. Brz. Duplex[2]	1-770005-1	—	1-770006-0	1-770249-0		
12-10 [3.0-5.0]	**.200 max.[3]** 5.08	**1.005** 25.53	**.980** 24.90	Phos. Brz. Pre-tin	770003-3	770246-3	770004-3	770247-3	567211-1[6] 567211-2[6] 567211-4[6]	69710-1[5]
				Phos. Brz. Duplex[2]	1-770003-0	1-770246-0	1-770004-0	1-770247-0		

[1]Gold Finish — Plated with .000030 [.000762] min. gold in mating area and inside wire barrel over .000050 [.00127] min. nickel underplate on entire contact.
[2]Duplex Finish — Plated with .000030 [.000762] min. gold in mating area and .000050 [.00127] min. tin in crimp area over .000050 [.00127] min. nickel underplate on entire contact.
[3]There is no insulation barrel on this contact. Insulation maximum diameter is limited by the housing. Use of strain relief is recommended with these contacts.
[4]Use Hand Tool No. **91508-1** for 20 – 18 AWG and No. **91506-1** for 16 – 14 AWG.
[5]Hand Tool No. 69710-1 uses die set No. **58380-1** for 12 AWG and No. **58380-2** for 10 AWG.
[6]HDM Applicator part number ending in -1 is used on AMPOMATOR CLS Machine with T or G Terminators, -2 is used on AMP-O-LECTRIC Model K Machine, -4 is used on AMP-O-LECTRIC Model G Machine. See pages 207-210 for further information.

Grounding Pin

(Mate first, break last, not for interrupting current)

Solid pin diameter .084 [2.13]

.100 [2.54] longer than standard pin

Stock thickness .012 [.304]

These contacts can be used in either Universal MATE-N-LOK II Plug or Cap housings only.

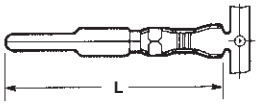

Wire Size Range AWG [mm²]	Ins. Dia. Range	L Dim.	Material & Finish	Contact Part Numbers Strip Form	Contact Part Numbers Loose Piece	HDM Applicator Part No.	Hand Tool Part No.
20-14 [.5-2.0]	**.060-.130** 1.52-3.30	**1.105** 25.53	Brass. Pre-tin	770193-1	770254-1	567213-1[3] 567213-2[3] 567213-4[3]	91500-1
			Brass. Duplex[1]	1-770193-0	1-770254-0		
	.130-.200 3.30-5.08	**1.085** 27.56	Brass. Pre-tin	770194-1	770255-1	567212-1[3] 567212-2[3] 567212-4[3]	91508-1[2] 91506-1[2]
			Brass. Duplex[1]	1-770194-0	1-770255-0		

[1]Duplex Finish — Plated with .000030 [.000762] min. gold in mating area and .000050 [.00127] min. tin in crimp area over .000050 [.00127] min. nickel underplate on entire contact.
[2]Use Hand Tool No. **91508-1** for 20 – 18 AWG and No. **91506-1** for 16 – 14 AWG.
[3]HDM Applicator part number ending in -1 is used on AMPOMATOR CLS Machine with T or G Terminators, -2 is used on AMP-O-LECTRIC Model K Machine, -4 is used on AMP-O-LECTRIC Model G Machine. See pages 207-210 for further information.

Latch Disengaging Tool
Part No. 58382-1
IS 408-9436

Contact Extraction Tool
(For extracting contacts crimped on 24 AWG or smaller wire)
Part No. 318851-1
IS 408-4371

Contact Insertion Tool
(For inserting contacts applied to small diameter wire)
Part No. 91002-1
IS 408-7347

Note: **All part numbers are RoHS Compliant.**

Catalog 82181
Revised 4-08
www.tycoelectronics.com

Dimensions are in inches and millimeters unless otherwise specified. Values in brackets are metric equivalents.

Dimensions are shown for reference purposes only. Specifications subject to change.

USA: 1-800-522-6752
Canada: 1-905-470-4425
Mexico: 01-800-733-8926
C. America: 52-55-1106-0803
South America: 55-11-2103-6000
Hong Kong: 852-2735-1628
Japan: 81-44-844-8013
UK: 44-8706-080-208

Universal MATE-N-LOK II Connectors (Continued)

Housing Kits
Free-Hanging or Panel Mount

.250 [6.35] Centerline spacing

Material — Nylon
Flammability Rating — UL 94V-0

Related Product Data
Product Specification

108-1090 Universal MATE-N-LOK II Connectors

Performance Characteristics— pages 189-190
Contacts— page 192
Panel Cutout Recommendations— page 195
Keying Plug— page 196
Strain Reliefs— page 196
Kit Components— page 195
Technical Documents— pages 189 and 205-206

Other Mating Connectors

Universal MATE-N-LOK Housings — page 175
Universal MATE-N-LOK Headers — pages 182-183 and 185
Universal MATE-N-LOK Test Connectors — page 185

2 Circuit, In-line

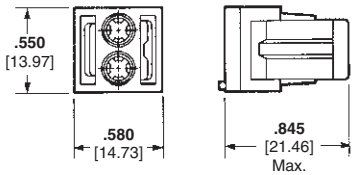

Plug Rear

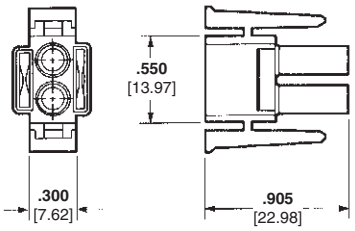

Plug Front

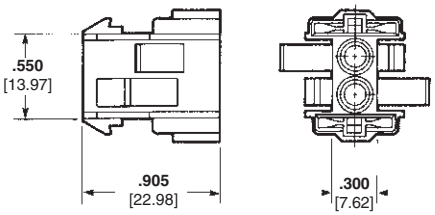

Cap Front

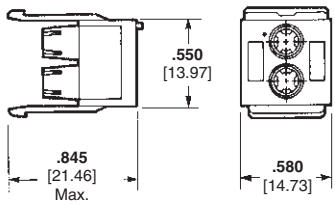

Cap Rear

3, 4 and 5 Circuit, In-Line

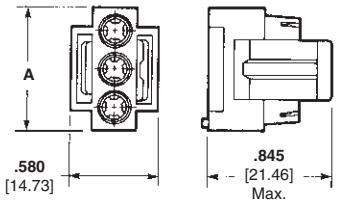

Plug Rear

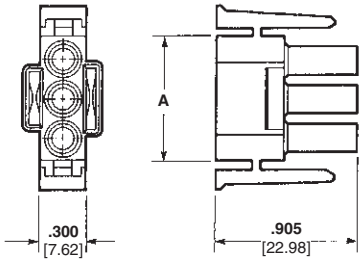

Plug Front

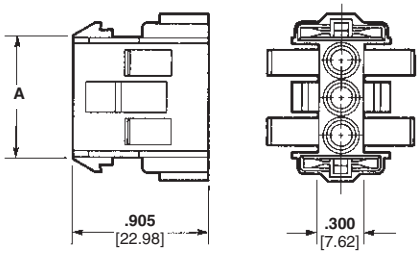

Cap Front

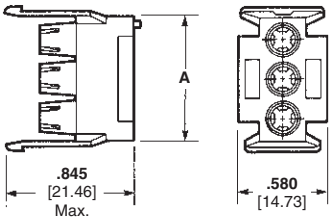

Cap Rear

Number of Circuits	A Dim.	Kit Part Numbers (Includes Front and Rear)	
		Plug	Cap
2	—	770017-1	770024-1
3	**.800** 20.32	770018-1	770025-1
4	**1.050** 26.67	770019-1	770026-1
5	**1.300** 33.02	770016-1[4]	—

Notes:
1. Kits consist of a front and rear component.
2. Kit components can be purchased separately. Page 195.
3. Packaging: Bulk — 250 each component per poly bag/box.
4. Mates with standard Universal MATE-N-LOK cap housing P/N 350810-1 and 640900-X or 640901-X Vertical headers.

Note: **All part numbers are RoHS Compliant.**

Dimensions are in inches and millimeters unless otherwise specified. Values in brackets are metric equivalents.

Dimensions are shown for reference purposes only. Specifications subject to change.

USA: 1-800-522-6752
Canada: 1-905-470-4425
Mexico: 01-800-733-8926
C. America: 52-55-1106-0803
South America: 55-11-2103-6000
Hong Kong: 852-2735-1628
Japan: 81-44-844-8013
UK: 44-8706-080-208

Universal MATE-N-LOK II Connectors (Continued)

Housing Kits
Free-Hanging or Panel Mount

.250 [6.35] Centerline spacing

Material — Nylon
Flammability Rating — UL 94V-0

Related Product Data

Product Specification
108-1090 Universal MATE-N-LOK II Connectors

Performance Characteristics— pages 189-190
Contacts— page 192
Panel Cutout Recommendations— page 195
Keying Plug— page 196
Strain Reliefs— page 196
Kit Components— page 195
Technical Documents— pages 189 and 205-206

Other Mating Connectors
Universal MATE-N-LOK Housings — page 176
Universal MATE-N-LOK Headers — pages 182-183 and 185
Universal MATE-N-LOK Test Connectors — page 185

6 Circuit, Matrix

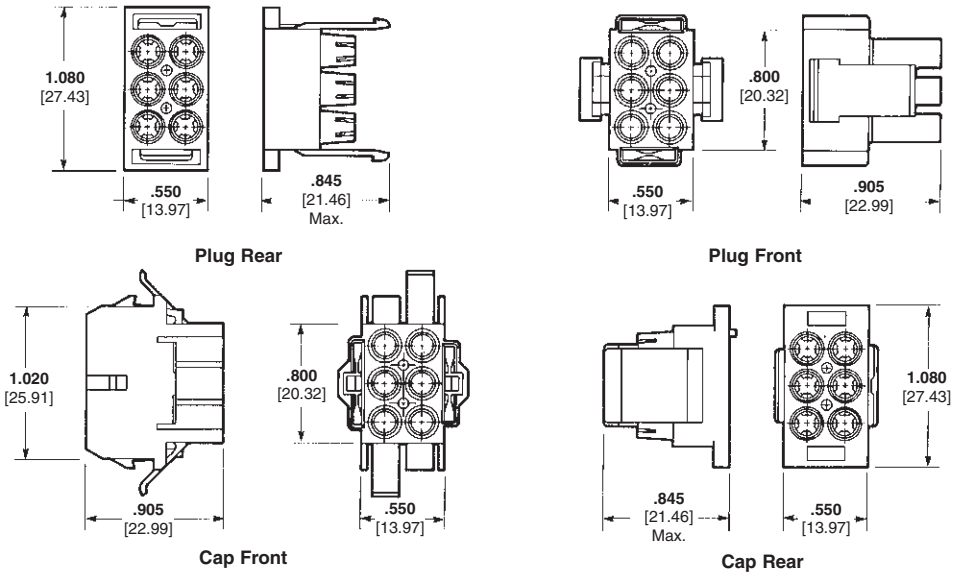

9, 12 and 15 Circuit, Matrix

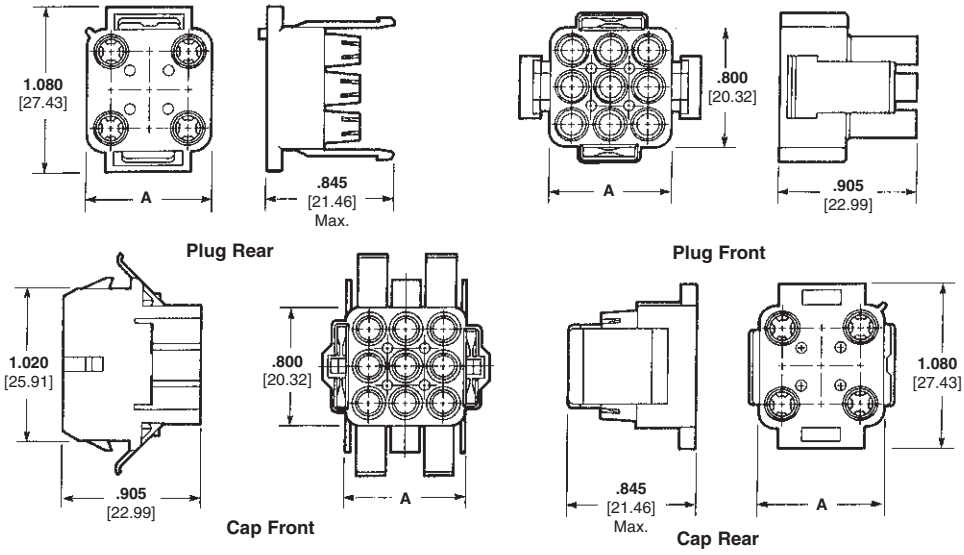

Number of Circuits	A Dim.	Kit Part Numbers (Includes Front and Rear)	
		Plug	Cap
6	—	770020-1	770027-1
9	**.800** 20.32	770021-1	770028-1
12	**1.050** 26.67	770022-1	770029-1
15	**1.300** 33.02	770023-1	770030-1

Notes:
1. Kits consist of a front and rear component.
2. Kit components can be purchased separately. Page 195.
3. Packaging: Bulk — 250 each component per poly bag/box.

Note: **All part numbers are RoHS Compliant.**

Catalog 82181
Revised 4-08
www.tycoelectronics.com

Dimensions are in inches and millimeters unless otherwise specified. Values in brackets are metric equivalents.

Dimensions are shown for reference purposes only. Specifications subject to change.

USA: 1-800-522-6752
Canada: 1-905-470-4425
Mexico: 01-800-733-8926
C. America: 52-55-1106-0803
South America: 55-11-2103-6000
Hong Kong: 852-2735-1628
Japan: 81-44-844-8013
UK: 44-8706-080-208

Universal MATE-N-LOK II Connectors (Continued)

Housing Components

Free-Hanging or Panel Mount

.250 [6.35] Centerline spacing

Material — Nylon
Flammability Rating — UL 94V-0

Related Product Data

Product Specification
108-1090 Universal MATE-N-LOK II Connectors

Performance Characteristics— pages 189-190
Contacts— page 192
Illustrations and Dimensions— pages 193-194
Panel Cutout Recommendations— page 195
Keying Plug— page 196
Strain Reliefs— page 196
Technical Documents— pages 189 and 205-206

Other Mating Connectors
Universal MATE-N-LOK Connectors — page 176
Universal MATE-N-LOK Headers — pages 182-183 and 185
Universal MATE-N-LOK Test Connectors — page 185

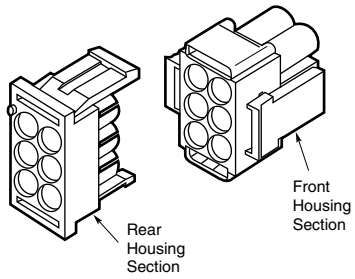

Plug Housing

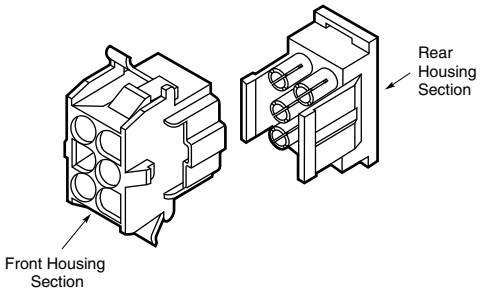

Cap Housing

Number of Circuits	Kit Component Part Numbers					
	Plug			Cap		
	Kit	Front	Rear	Kit	Front	Rear
2	770017-1	770031-1	770032-1	770024-1	770045-1	770046-1
3	770018-1	770033-1	770034-1	770025-1	770047-1	770048-1
4	770019-1	770035-1	770036-1	770026-1	770049-1	770050-1
5	770016-1	770319-1	770320-1	—	—	—
6	770020-1	770037-1	770038-1	770027-1	770051-1	770052-1
9	770021-1	770039-1	770040-1	770028-1	770053-1	770054-1
12	770022-1	770041-1	770042-1	770029-1	770055-1	770056-1
15	770023-1	770043-1	770044-1	770030-1	770057-1	770058-1

Notes:
1. Kits consist of a front and rear component.
2. Kit components can be purchased separately.

Note: All part numbers are RoHS Compliant.

Recommended Cap Housing Panel Cutouts

View is from cap entry side

Refer to Application Specification 114-1043

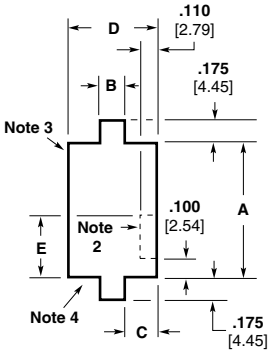

Number of Circuits	Dimensions				
	A	B	C	D	E
2	**.565** 14.35	**.340** 8.63	**.095** 2.41	**.530** 13.46	**.250** 6.35
3	**.815** 20.70	**.340** 8.63	**.095** 2.41	**.530** 13.46	**.250** 6.35
4	**1.065** 27.05	**.340** 8.63	**.095** 2.41	**.530** 13.46	**.250** 6.35
6	**.565** 14.35	**.480** 12.19	**.275** 6.99	**1.030** 26.16	**.250** 6.35
9	**.815** 20.70	**.480** 12.19	**.275** 6.99	**1.030** 26.16	**.250** 6.35
12	**1.065** 27.05	**.480** 12.19	**.275** 6.99	**1.030** 26.16	**.350** 8.89
15	**1.315** 33.40	**.480** 12.19	**.275** 6.99	**1.030** 26.16	**.350** 8.89

Notes:
1. Recommended panel thickness — .030-.090 [.762-2.286]. Panel must be punched so that housing enters panel in same direction as the punch.
2. Optional — Do not remove this material when keying cap housing to panel.
3. Circuit #1 location when using panel keying with 6, 9, 12 and 15 circuit housings.
4. Circuit #1 location when using panel keying with 2, 3, and 4 circuit housings.

Catalog 82181
Revised 4-08
www.tycoelectronics.com

Dimensions are in inches and millimeters unless otherwise specified. Values in brackets are metric equivalents.

Dimensions are shown for reference purposes only. Specifications subject to change.

USA: 1-800-522-6752
Canada: 1-905-470-4425
Mexico: 01-800-733-8926
C. America: 52-55-1106-0803
South America: 55-11-2103-6000
Hong Kong: 852-2735-1628
Japan: 81-44-844-8013
UK: 44-8706-080-208

Universal MATE-N-LOK II Connectors (Continued)

Plug or Cap Housing Strain Reliefs

IS 408-3320

Material — Nylon
Flammability Rating — UL 94V-0

2, 3, 4, 5, 6, 9, 12 and 15 Circuit (Enclosed)

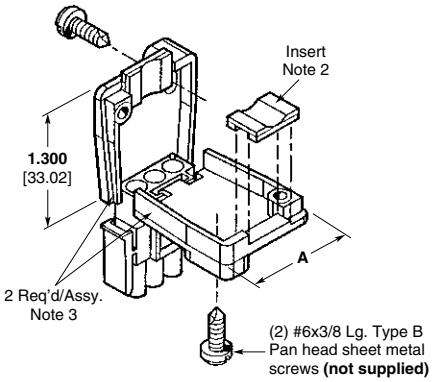

In-Line

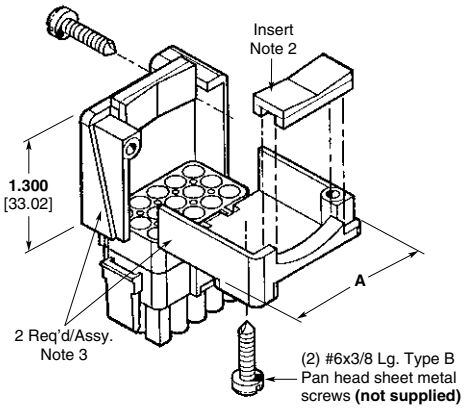

Matrix

Style	Number of Circuits	A Dim.	Insert Supplied	Single Wire Dia. Range	Wire Bundle Dia. Range	Strain Relief Part Numbers
In-Line	2	**.960** 24.38	Yes	**.040 – .190** 1.02 – 4.83	—	640713-1
			No	—	**.200 – .350** 5.08 – 8.89	640713-2
	3	**1.140** 28.96	Yes	**.040 – .190** 1.02 – 4.83	—	640714-1
			No	—	**.200 – .350** 5.08 – 8.89	641945-1
	4	**1.340** 34.04	Yes	**.040 – .190** 1.02 – 4.83	—	641776-1
			No	—	**.200 – .350** 5.08 – 8.89	641776-2
	5	**1.530** 38.86	Yes	**.040 – .190** 1.02 – 4.83	—	643030-1
			No	—	**.200 – .350** 5.08 – 8.89	643030-4
Matrix	6	**1.030** 26.16	Yes	—	**.120 – .650** 3.05 – 16.51	640715-1
	9	**1.030** 26.16	Yes	—	**.120 – .650** 3.05 – 16.51	640716-1
	12	**1.280** 32.51	Yes	—	**.150 – .750** 3.81 – 19.05	640717-1
	15	**1.530** 38.86	Yes	—	**.200 – .850** 5.08 – 21.59	640718-1

Notes:
1. Insert comes attached to strain relief. It can be used to provide additional adjustment for small wire bundles or discarded.
2. Insert to be positioned as shown by dotted lines.
3. Strain relief part number represents one-half of a strain relief. Two of a part number are required for one connector.

Keying Plug

IS 408-3200

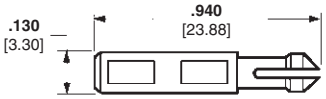

Part Number
UL94V-0 Nylon material — **770377-1**

Related Product Data

Housings — pages 193-194
Technical Documents — pages 189 and 205-206

Note: **All part numbers are RoHS Compliant.**

Catalog 82181
Revised 4-08
www.tycoelectronics.com

Dimensions are in inches and millimeters unless otherwise specified. Values in brackets are metric equivalents.

Dimensions are shown for reference purposes only. Specifications subject to change.

USA: 1-800-522-6752
Canada: 1-905-470-4425
Mexico: 01-800-733-8926
C. America: 52-55-1106-0803
South America: 55-11-2103-6000
Hong Kong: 852-2735-1628
Japan: 81-44-844-8013
UK: 44-8706-080-208

Universal MATE-N-LOK Headers for UMNL II Connectors

PC Board Vertical Pin Headers

.250 [6.35] Centerline spacing

Material

Housing — Nylon

Flammability Rating — UL94V-0

Contacts — Phosphor bronze

Solder tail diameter .062 [1.57]

Related Product Data

Product Specification

108-1053 Universal MATE-N-LOK PC Board Headers

Performance Characteristics— pages 189-190

Recommended PC Board Hole Layout— page 199

Technical Documents— pages 189 and 205-206

Mating Connectors

Universal MATE-N-LOK II
Plug Housings — pages 193-194

Universal MATE-N-LOK
Plug Housings — page 175

2, 3, 4 and 5 Circuit, In-Line

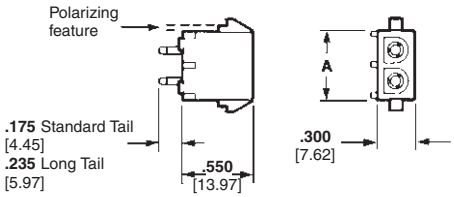

Number of Circuits	A Dim.	Pin Finish	Pin Header Part Numbers: Standard Tail[2]	Standard Tail Polarized[2]	Long Tail[3]	Mates with Plug Housing Part Number (Using Socket Contacts): Universal MATE-N-LOK II	Universal MATE-N-LOK
2	**.550** 13.97	Pre-tin	350786-1	641964-1 / 1-641964-1[4]	350787-1	770017-1	350777-1
		Duplex[1]	350786-3	641964-3	350787-3		
3	**.800** 20.32	Pre-tin	350789-1	641966-1 / 1-641966-1[4]	350790-1	770018-1	350766-1
		Duplex[1]	350789-3	—	350790-3		
4	**1.050** 26.67	Pre-tin	350792-1	641968-1	350793-1	770019-1	350779-1
		Duplex[1]	350792-3	—	350793-3		
5	**1.300** 33.02	Pre-tin	640900-1	643406-1	—	770016-1	350809-1
		Duplex[1]	640900-3	—	—		

[1]Duplex Finish — Plated with .000030 [.000762] min. gold in mating area, matte tin on solder tail end over .000050 [.00127] min. nickel underplate on entire contact.
[2]Use Standard Tail for .062 [1.57] thick PC Board.
[3]Use Long Tail for .125 [3.18] thick PC Board.
[4]Black in color.

6, 9, 12 and 15 Circuit, Matrix

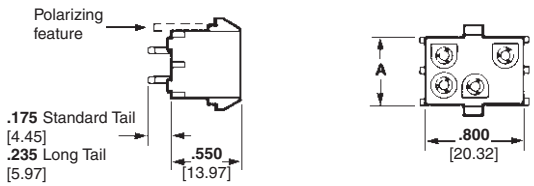

Number of Circuits	A Dim.	Pin Finish	Pin Header Part Numbers: Standard Tail[2]	Standard Tail Polarized[2]	Long Tail[3]	Mates with Plug Housing Part Number (Using Socket Contacts): Universal MATE-N-LOK II	Universal MATE-N-LOK
6	**.550** 13.97	Pre-tin	350711-1	641970-1	350732-1	770020-1	350715-1
		Duplex[1]	350711-4	641970-3	350732-4		
9	**.800** 20.32	Pre-tin	350712-1	641972-1 / 1-641972-1[4]	350742-1	770021-1	350720-1
		Duplex[1]	350712-4	641972-3	350742-4		
12	**1.050** 26.67	Pre-tin	350713-1	641974-1 / 1-641974-1[4]	350737-1	770022-1	350735-1
		Duplex[1]	350713-4	641974-3	350737-4		
15	**1.300** 33.02	Pre-tin	350714-1	641976-1	350738-1	770023-1	350736-1
		Duplex[1]	350714-4	641976-4	350738-4		

[1]Duplex Finish — Plated with .000030 [.000762] min. gold in mating area, matte tin on solder tail end over .000050 [.00127] min. nickel underplate on entire contact.
[2]Use Standard Tail for .062 [1.57] thick PC Board.
[3]Use Long Tail for .125 [3.18] thick PC Board.
[4]Black in color.

Note: **All part numbers are RoHS Compliant.**

Dimensions are in inches and millimeters unless otherwise specified. Values in brackets are metric equivalents.

Dimensions are shown for reference purposes only. Specifications subject to change.

USA: 1-800-522-6752
Canada: 1-905-470-4425
Mexico: 01-800-733-8926
C. America: 52-55-1106-0803
South America: 55-11-2103-6000
Hong Kong: 852-2735-1628
Japan: 81-44-844-8013
UK: 44-8706-080-208

Universal MATE-N-LOK Headers for UMNL II Connectors (Continued)

PC Board Vertical Socket Headers

.250 [6.35] Centerline spacing

Material

Housing — Nylon

Flammability Rating — UL94V-0

Contacts — Phosphor bronze

Solder tail diameter .062 [1.57]

Related Product Data

Product Specification
108-1053 Universal MATE-N-LOK PC Board Headers

Performance Characteristics— pages 189-190
Recommended PC Board Hole Layout— page 199
Technical Documents— pages 189 and 205-206

Mating Connectors

Universal MATE-N-LOK II
Plug Housings — pages 193-194

Universal MATE-N-LOK
Plug Housings — page 175

2, 3, 4 and 5 Circuit, In-Line

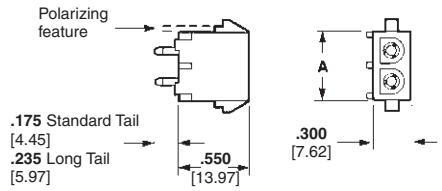

Number of Circuits	A Dim.	Socket Finish	Socket Header Part Numbers: Standard Tail[2]	Standard Tail Polarized[2]	Long Tail[3]	Mates with Plug Housing Part Number (Using Pin Contacts): Universal MATE-N-LOK II	Universal MATE-N-LOK
2	.550 13.97	Pre-tin	350824-1	643412-1	350831-1	770017-1	350777-1
		Duplex[1]	350824-4	643412-3	—		
3	.800 20.32	Pre-tin	350825-1	643414-1	350832-1	770018-1	350766-1
		Duplex[1]	350825-4	643414-3	350832-4		
4	1.050 26.67	Pre-tin	350826-1	643416-1	350833-1	770019-1	350779-1
		Duplex[1]	350826-4	—	350833-4		
5	1.300 33.02	Pre-tin	640901-1	—	—	770016-1	350809-1
		Duplex[1]	640901-3	—	—		

[1]Duplex Finish — Plated with .000030 [.000762] min. gold in mating area, matte tin on solder tail end over .000050 [.00127] min. nickel underplate on entire contact.
[2]Use Standard Tail for .062 [1.57] thick PC Board.
[3]Use Long Tail for .125 [3.18] thick PC Board.

6, 9, 12 and 15 Circuit, Matrix

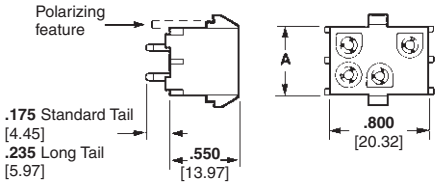

Number of Circuits	A Dim.	Socket Finish	Socket Header Part Numbers: Standard Tail[2]	Standard Tail Polarized[2]	Long Tail[3]	Mates with Plug Housing Part Number (Using Pin Contacts): Universal MATE-N-LOK II	Universal MATE-N-LOK
6	.550 13.97	Pre-tin	350827-1	643424-1	350834-1	770020-1	350715-1
		Duplex[1]	350827-4	643424-3	350834-4		
9	.800 20.32	Pre-tin	350828-1	643426-1	350835-1	770021-1	350720-1
		Duplex[1]	350828-4	643426-3	350835-4		
12	1.050 26.67	Pre-tin	350829-1	643428-1	350836-1	770022-1	350735-1
		Duplex[1]	350829-4	—	350836-4		
15	1.300 33.02	Pre-tin	350830-1	643430-1	350837-1	770023-1	350736-1
		Duplex[1]	350830-4	—	350837-4		

[1]Duplex Finish — Plated with .000030 [.000762] min. gold in mating area, matte tin on solder tail end over .000050 [.00127] min. nickel underplate on entire contact.
[2]Use Standard Tail for .062 [1.57] thick PC Board.
[3]Use Long Tail for .125 [3.18] thick PC Board.

Note: **All part numbers are RoHS Compliant.**

Universal MATE-N-LOK Headers for UMNL II Connectors (Continued)

Recommended PC Board Hole Layouts for Pin and Socket Vertical Headers

Related Product Data

Vertical Headers — pages 197-198

2, 3, 4 and 5 Circuit, In-Line

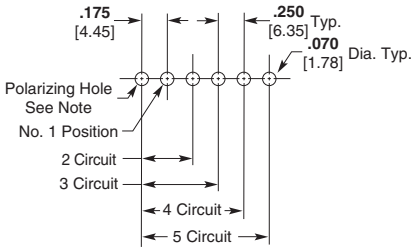

6, 9, 12 and 15 Circuit, Matrix

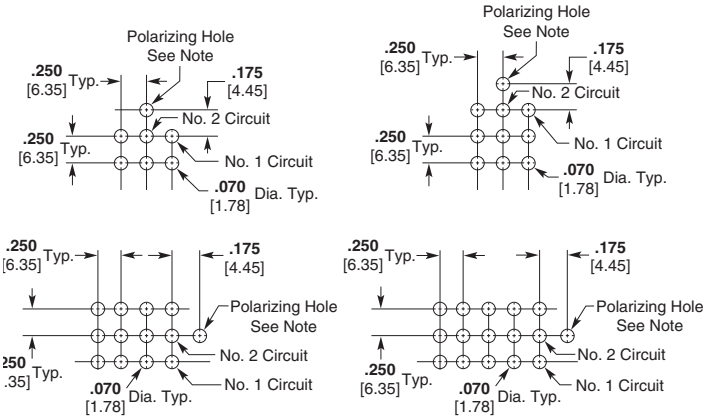

Note: Polarizing hole **.070** [1.78] Dia. required for polarized headers only.

PC Board Vertical Pin Headers with ACTION PIN Contacts

Material and Finish

Housing — PBT, black

Flammability Rating — UL94V-0

Contacts — Copper alloy, plated with tin over nickel on entire contact

Related Product Data

Performance Characteristics— pages 189-190

Technical Documents— pages 189 and 205-206

Product Specification

108-5222 ACTION PIN Universal MATE-N-LOK Header Assembly

Mating Connectors

Universal MATE-N-LOK II
Plug Housings — pages 193-194

Universal MATE-N-LOK
Plug Housings — page 175

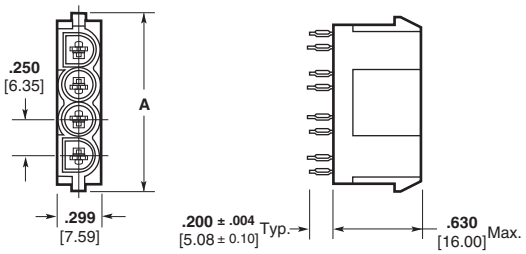

Number of Circuits	A Dim.	Part Number	Mates with Plug Housing Part Number (Using Socket Contacts)	
			Universal MATE-N-LOK II	Universal MATE-N-LOK
2	**.750** 19.05	173924-1*	770017-1	350777-1
3	**1.000** 25.40	173925-1*	770018-1	350766-1
4	**1.250** 31.75	173926-1*	770019-1	350779-1

*Install in PC Board with arbor tool.

Note: All part numbers are RoHS Compliant.

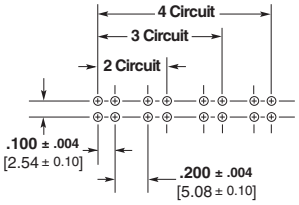

Recommended PC Board Hole Layout

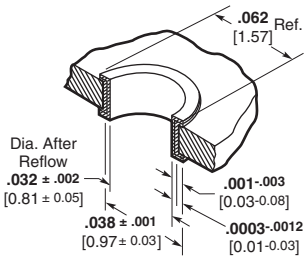

PC Board Hole Dimensions

Catalog 82181
Revised 4-08
www.tycoelectronics.com

Dimensions are in inches and millimeters unless otherwise specified. Values in brackets are metric equivalents.

Dimensions are shown for reference purposes only. Specifications subject to change.

USA: 1-800-522-6752
Canada: 1-905-470-4425
Mexico: 01-800-733-8926
C. America: 52-55-1106-0803
South America: 55-11-2103-6000
Hong Kong: 852-2735-1628
Japan: 81-44-844-8013
UK: 44-8706-080-208

Universal MATE-N-LOK Headers for UMNL II Connectors (Continued)

PC Board Right-Angle Pin and Socket Headers

.250 [6.35] Centerline spacing

Material

Housing — Nylon

Flammability Rating — UL 94V-0

Contacts — Phosphor bronze

Solder tail width .052 [1.32]

Related Product Data

Product Specification

108-1053 Universal MATE-N-LOK PC Board Headers

Performance Characteristics— pages 189-190

Technical Documents— pages 189 and 205-206

Mating Connectors

Universal MATE-N-LOK II

Plug Housings — pages 193-194

Universal MATE-N-LOK

Plug Housings — page 175

2, 3, 4 and 5 Circuit, In-line

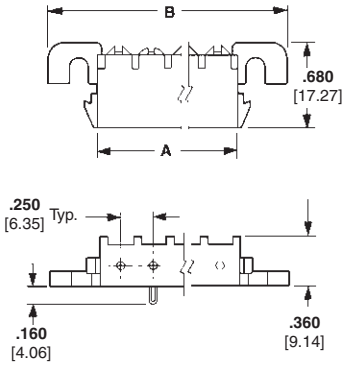

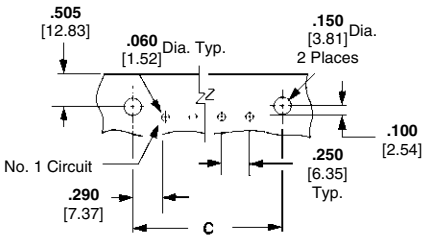

Use 6-32 UNC Pan Head Screw 3/8 [9.53] long for mounting **(Not Supplied)**

Recommended PC Board Hole Layout .062 [1.57] Board Thickness

Number of Circuits	Dimensions A	Dimensions B	Dimensions C	Contact Finish	Part Numbers: Right-Angle Header Pin	Part Numbers: Right-Angle Header Socket	Part Numbers: Mates with Plug Housing: Universal MATE-N-LOK II	Part Numbers: Mates with Plug Housing: Universal MATE-N-LOK
2	.550 13.97	1.245 31.62	.830 21.08	Pre-tin	1-350942-0	643226-1	770017-1	350777-1
				Duplex[1]	3-350942-0	—		
3	.800 20.32	1.495 37.97	1.080 27.43	Pre-tin	1-350943-0	643228-1	770018-1	350766-1
				Duplex[1]	3-350943-0	3-643228-0		
4	1.050 26.67	1.745 44.32	1.330 33.78	Pre-tin	1-350944-0	643230-1	770019-1	350779-1
				Duplex[1]	3-350944-0	3-643230-0		
5	1.300 33.02	1.995 50.67	1.580 40.13	Pre-tin	1-350945-0	643232-1	770016-1	350809-1
				Duplex[1]	3-350945-0	3-643232-0		

[1]Duplex Finish — Plated with .000030 [.000762] min. gold in mating area, matte tin on solder tail end over .000050 [.00127] min. nickel underplate on entire contact.

Note: **All part numbers are RoHS Compliant.**

Catalog 82181
Revised 4-08
www.tycoelectronics.com

Dimensions are in inches and millimeters unless otherwise specified. Values in brackets are metric equivalents.

Dimensions are shown for reference purposes only. Specifications subject to change.

USA: 1-800-522-6752
Canada: 1-905-470-4425
Mexico: 01-800-733-8926
C. America: 52-55-1106-0803
South America: 55-11-2103-6000
Hong Kong: 852-2735-1628
Japan: 81-44-844-8013
UK: 44-8706-080-208

Universal MATE-N-LOK Headers for UMNL II Connectors (Continued)

High Current Contacts

The Louvertac bands have the versatility of being designed into contact dimensions used in existing AMP connectors.

Universal MATE-N-LOK II High Current contacts have been designed to fit into an existing Universal MATE-N-LOK II housing. An initial T-Rise test of a fully energized 4 circuit connector with 10 gage wires has shown a 31 amp capability per line with a 30° T-rise.

Cable-to-Cable

Material

Body — Copper Alloy
Louvertac Band — Beryllium Copper
Finish — Silver
Contact Extraction Tool No. 318851-1
Latch Disengaging Tool No. 58382-1

- **Recognized under the Component Program of Underwriters Laboratories Inc., File No. E28476**
- **Certified by Canadian Standards Association, File No. LR7189**
- **Passed test by VDE under their Registration Number 3980/Continuous Surveillance**

Design Objective — 108-1583

Application Specification — 114-16021

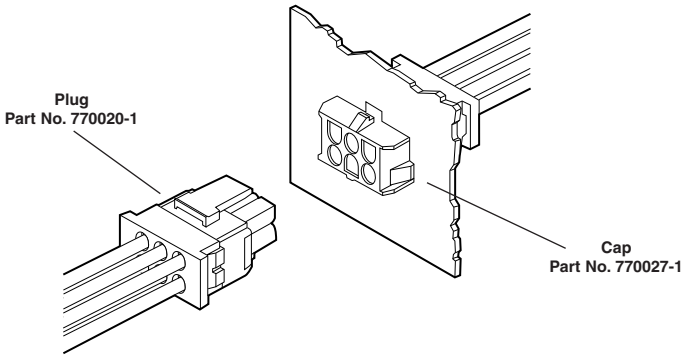

Contacts

Wire Size AWG	Contact Part Numbers		Crimp Tools
	Pin	Socket	
10	193796-1	193797-1	Daniels Hand Tool #M310 or AMP P/N 356114-1 Positioner #TP1013 or AMP P/N 356337-1
12-14	193841-1	193842-1	

Note: High Current contacts are **not** intermateable with any other Universal MATE-N-LOK contact.

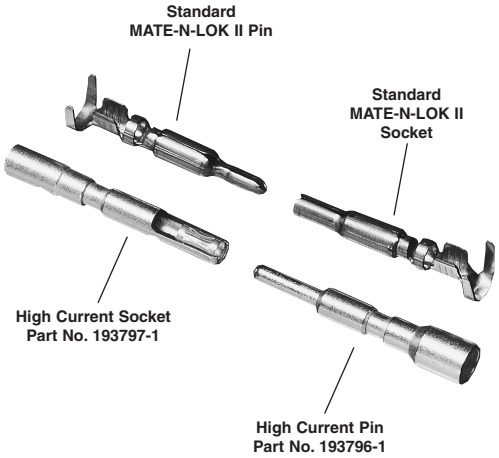

Connector Housings

No. of Circuits	Kit Part Numbers	
	Plug	Cap
2	770017-1	770024-1
3	770018-1	770025-1
4	770019-1	770026-1
5	770016-1	—
6	770020-1	770027-1
9	770021-1	770028-1
12	770022-1	770029-1
15	770023-1	770030-1

Cable-to-Right-Angle Board

Material

Housing — UL 94V-0 Nylon
Contact Body — Copper Alloy
Louvertac Band — Beryllium Copper
Finish — Silver

- **Recognized under the Component Program of Underwriters Laboratories Inc., File No. E28476**
- **Certified by Canadian Standards Association, File No. LR7189**
- **Passed test by VDE under their Registration Number 3980/Continuous Surveillance**

Design Objective — 108-1594

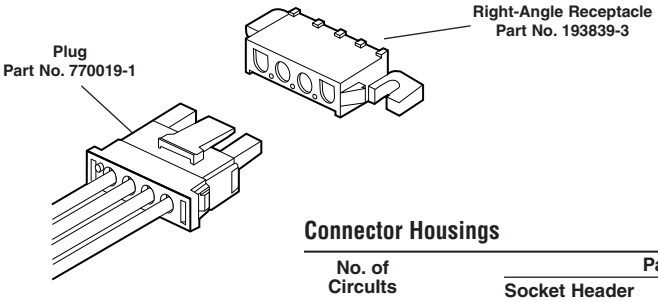

Connector Housings

No. of Circuits	Part Numbers	
	Socket Header	Mates with Plug Housing
2	193839-1	770017-1
3	193839-2	770018-1
4	193839-3	770019-1
5	193839-4	770016-1

Notes: 1. High Current contacts with Louvertac bands are **not** intermateable with any other contact.
2. Additional information on connectors is available in AMP High Current Products Catalog 65141.
3. Additional information on contacts is available in AMP Precision Pin and Socket Contacts Catalog 65910.

Note: All part numbers are RoHS Compliant.

Catalog 82181
Revised 4-08
www.tycoelectronics.com

Dimensions are in inches and millimeters unless otherwise specified. Values in brackets are metric equivalents.

Dimensions are shown for reference purposes only. Specifications subject to change.

USA: 1-800-522-6752
Canada: 1-905-470-4425
Mexico: 01-800-733-8926
C. America: 52-55-1106-0803
South America: 55-11-2103-6000
Hong Kong: 852-2735-1628
Japan: 81-44-844-8013
UK: 44-8706-080-208

Universal MATE-N-LOK Headers for UMNL II Connectors (Continued)

High Current Vertical Pin Headers

High Current Universal MATE-N-LOK II Vertical Pin Headers are designed to accept Universal MATE-N-LOK II Plugs with High Current Socket contacts. All housings are polarized in order to allow proper circuit board placement. Eight versions are available from 2 circuit to 15 circuits.

Material

Housing — UL 94V-0 Nylon
Contacts — Copper Alloy
Finish — Silver

- **Recognized under the Component Program of Underwriters Laboratories Inc., File No. E28476**
- **Certified by Canadian Standards Association, File No. LR7189**
- **Passed test by VDE under their Registration Number 3980/Continuous Surveillance**

Design Objective — 108-1594

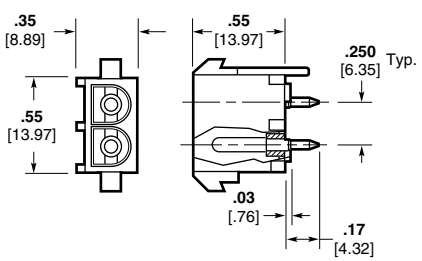

2 Circuit
Part No. 194009-1

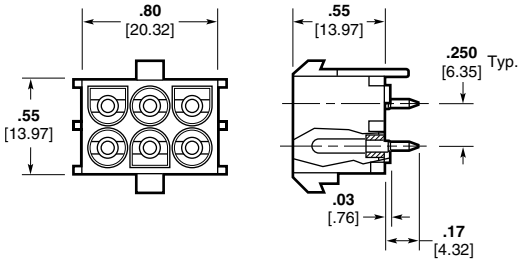

6 Circuit
Part No. 194002-1

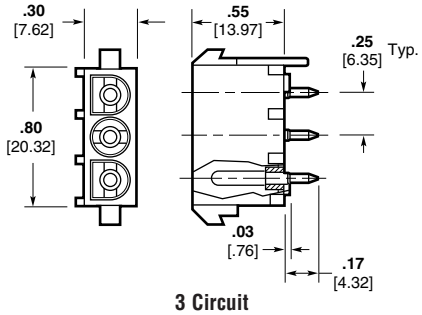

3 Circuit
Part No. 194017-1

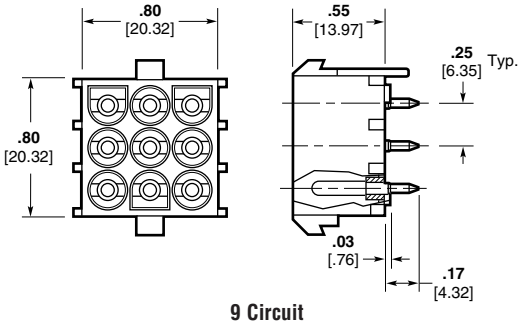

9 Circuit
Part No. 194012-1

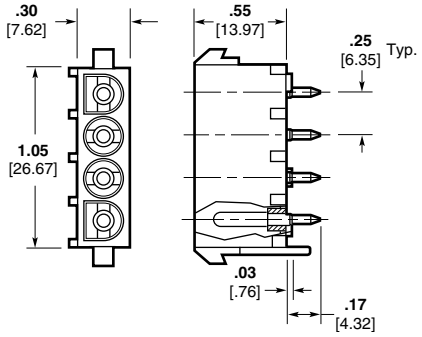

4 Circuit
Part No. 194010-1

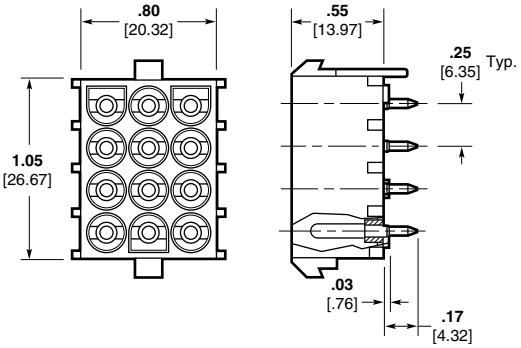

12 Circuit
Part No. 194014-1

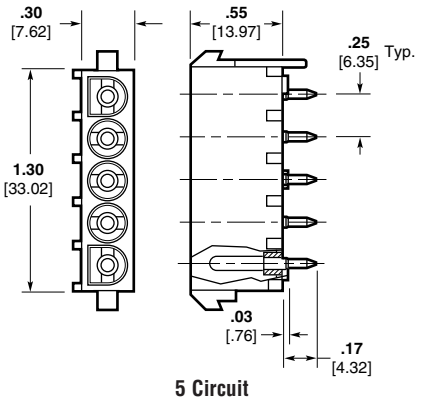

5 Circuit
Part No. 194018-1

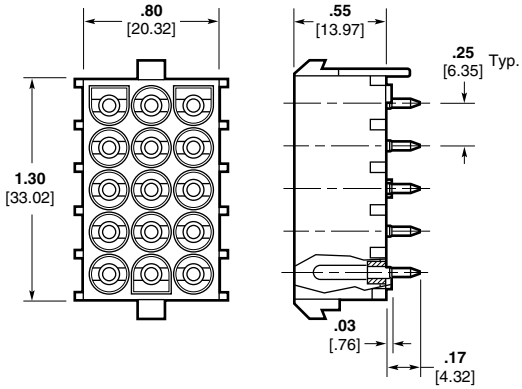

15 Circuit
Part No. 194013-1

Notes: 1. High Current contacts with Louvertac bands are **not** intermateable with any other contact.
2. Additional information on connectors is available in AMP High Current Products Catalog 65141.

Dimensions are in inches and millimeters unless otherwise specified. Values in brackets are metric equivalents.

Dimensions are shown for reference purposes only. Specifications subject to change.

USA: 1-800-522-6752
Canada: 1-905-470-4425
Mexico: 01-800-733-8926
C. America: 52-55-1106-0803
South America: 55-11-2103-6000
Hong Kong: 852-2735-1628
Japan: 81-44-844-8013
UK: 44-8706-080-208

.156 MATE-N-LOK Connectors

Product Facts

- Positive polarized nylon housings
- Panel mount or free-hanging
- Numbered cavities for easy circuit identification
- Removable, crimp snap-in contacts
- Contacts accept 20-10 AWG wire sizes
- Pin contacts are used in cap housings, socket contacts are used in plug housings
- Not for interrupting current
- Recognized under the Component Program of Underwriters Laboratories Inc., File No. E28476
- Certified by Canadian Standards Association File No. LR7189

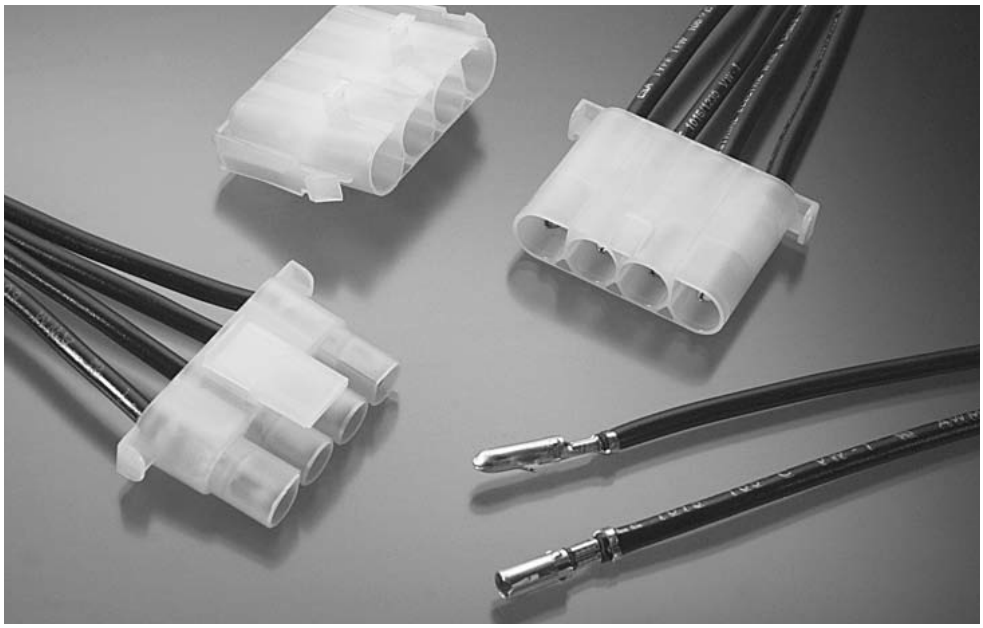

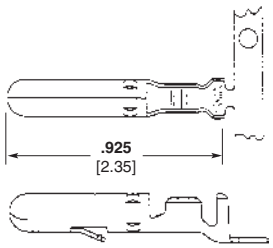

Pin

Used in Caps

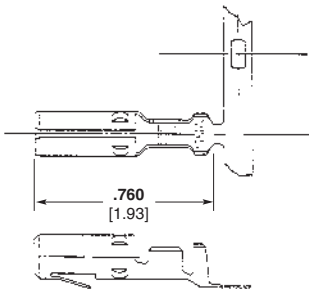

Socket

Used in Plugs

Contacts

Pin diameter .156 [3.96]

Material and Finish

Contacts—
Brass, Pre-tin plated
Stock thickness .018 [.457]

Wire Size Range AWG [mm²]	Ins. Dia. Range	Contact Part Number				HDM[1] Applicator Part No.	Hand Tool Part No.
		Pin		Socket			
		Strip Form	Loose Piece	Strip Form	Loose Piece		
20-14 [.5-2.0]	.125 max.	61086-1	61251-1	61085-1	61250-1	466462-1 466462-2 466462-3	58631-1
12-10 [3.0-6.0]	.185 max.	61234-1	61253-1	61233-1	61252-1	687765-2 687765-3	58632-1

[1]To be used with appropriate application machine. See pages 201-204 for further information.

Note: All part numbers are RoHS Compliant.

Insertion Tool
Part No. 91002-1
(IS 408-7347)

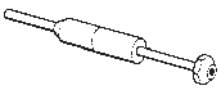

Extraction Tool
Part No. 691458-1 (Pins)
Part No. 691458-2 (Sockets)
(IS 408-4322)

Catalog 82181
Revised 4-08

www.tycoelectronics.com

Dimensions are in inches and millimeters unless otherwise specified. Values in brackets are metric equivalents.

Dimensions are shown for reference purposes only. Specifications subject to change.

USA: 1-800-522-6752
Canada: 1-905-470-4425
Mexico: 01-800-733-8926
C. America: 52-55-1106-0803
South America: 55-11-2103-6000
Hong Kong: 852-2735-1628
Japan: 81-44-844-8013
UK: 44-8706-080-208

.156 MATE-N-LOK Connectors (Continued)

Housings
Free-Hanging or Panel Mount

Related Product Data
Contacts—page 203
Product Specification
108-8002
Application Specification
114-1109

Material
Housings—
Nylon, Natural Color
Flammability Rating—UL94V-2

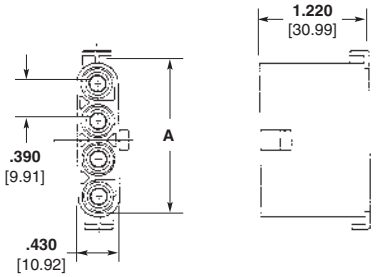

Pin Housing (Cap)
Free-Hanging
Part Number 794117-1

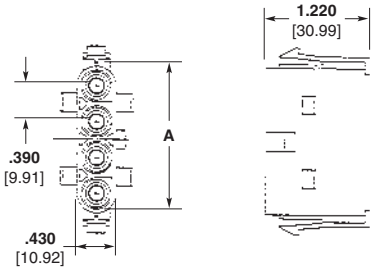

Pin Housing (Cap)
Panel Mount
Part Number 794118-1

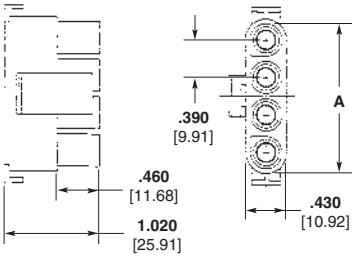

Socket Housing (Plug)
Part Number 794116-1

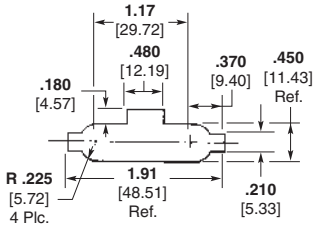

Panel Mount Cutout

Note: Panel must be punched in the same direction as the housing will be inserted.

Number of Circuits	A Dim.	Plug	Cap	
			Free-Hanging	Panel Mount
3	**.048** 1.210	794412-1	794413-1	—
4	**.063** 1.590	794116-1	794117-1	794118-1

Note: **All part numbers are RoHS Compliant.**

Dimensions are in inches and millimeters unless otherwise specified. Values in brackets are metric equivalents.

Dimensions are shown for reference purposes only. Specifications subject to change.

USA: 1-800-522-6752
Canada: 1-905-470-4425
Mexico: 01-800-733-8926
C. America: 52-55-1106-0803
South America: 55-11-2103-6000
Hong Kong: 852-2735-1628
Japan: 81-44-844-8013
UK: 44-8706-080-208

Technical Documents

Related Product Data

Connectors

2.5 mm Signal Double Lock (SDL)—pages 9-16
Micro MATE-N-LOK 3 mm—pages 17-47
Grace Inertia Connectors (GIC) 3.5—pages 49-52
.062 Commercial Pin and Socket—pages 53-57
Power Double Lock (PDL)—pages 59-81
Mini Universal MATE-N-LOK—pages 83-94
Mini Universal MATE-N-LOK 2—pages 99-107
(MR) Miniature Rectangular—pages 109-118
VAL-U-LOK Connector System—pages 119-124
AMP-DUAC—pages 125-133
5.0 mm Power Key Connectors (PKC)—pages 135-141
.093 Commercial Pin and Socket—pages 143-149
Commercial MATE-N-LOK—pages 151-162
.140 MATE-N-LOK—pages 165-167
Universal MATE-N-LOK—pages 169-188
Universal MATE-N-LOK II—pages 189-195
.156 MATE-N-LOK—pages 203-204

Various technical documents are available for your use:

Product Specifications describe technical performance characteristics and verification tests. They are intended for the Design, Component and Quality Engineer.

108-1000	Commercial MATE-N-LOK Connectors
108-1022	(MR) Miniature Rectangular Connectors
108-1031	Universal MATE-N-LOK Connectors
108-1031-1	Splash Proof Seal, Universal MATE-N-LOK Connectors
108-1032	.140 Diameter MATE-N-LOK Pin and Socket Connectors
108-1037	.062 Commercial Pin and Socket Connectors
108-1037-1	.062 Commercial Pin and Socket Contacts
108-1038	.093 Commercial Pin and Socket Connector
108-1053	Universal MATE-N-LOK Printed Circuit Board Headers
108-1077	Commercial MATE-N-LOK Printed Circuit Board Headers
108-1078	(MR) Miniature Rectangular Printed Circuit Board Headers
108-1090	Universal MATE-N-LOK II Connectors
108-1542	Mini-Universal MATE-N-LOK Connectors
108-1542-2	Splash Proof Seals for Mini-Universal MATE-N-LOK Connectors
108-1543	Mini-Universal MATE-N-LOK Headers
108-1594	Universal MATE-N-LOK Headers with High Current Contacts
108-1693	Mini-Universal MATE-N-LOK II Connectors
108-1694	Mini-Universal MATE-N-LOK II Headers
108-1699	AMP-DUAC Headers
108-1836	Micro MATE-N-LOK 3 mm Connectors
108-2069	Universal MATE-N-LOK Circular Connector
108-5138	Mini-Universal MATE-N-LOK Connectors (UL 94V-0)
108-5151	Mini-Universal MATE-N-LOK Connectors (UL 94V-2)
108-5155	Commercial MATE-N-LOK Pin Header Assembly
108-5222	Universal MATE-N-LOK Headers with ACTION PIN Contacts
108-5410	Power Double Lock (PDL) Connectors
108-5439	Power Double Lock (PDL) Connectors (SMT)
108-5459	2.5 mm Signal Double Lock (SDL) Connectors
108-5699	5.0 mm Power Key Connectors (PKC)
108-5810	Grace Inertia Connectors (GIC) 3.5
108-8002	.156 Diameter MATE-N-LOK Connectors
108-19099	AMP-DUAC Receptacles
108-49000	Commercial MATE-N-LOK IDC Insulation Displacement Connectors

Application Specifications describe requirements for using the product in its intended application and/or crimping information. They are intended for the Packaging and Design Engineer and the Machine Setup Person.

114-1007	.140 Diameter MATE-N-LOK Contacts
114-1010	Universal MATE-N-LOK Connectors
114-1012	Commercial MATE-N-LOK Contacts
114-1013	.062 Commercial Pin and Socket Connectors
114-1014	(MR) Miniature Rectangular Contacts
114-1043	Universal MATE-N-LOK II Connectors (housings, contacts and strain reliefs)
114-1109	.156 Diameter MATE-N-LOK Connectors
114-1111	Mini-Universal MATE-N-LOK 2 Connectors
114-5175	Power Double Lock (PDL) Connectors
114-5203	2.5 mm Signal Double Lock (SDL) Connectors
114-5292	5.0 mm Power Key Connectors (PKC)
114-5306	Grace Inertia Connectors (GIC) 3.5
114-6067	AMP-DUAC Crimping Contacts
114-13000	Micro MATE-N-LOK 3 mm Connectors

Catalog 82181
Revised 4-08
www.tycoelectronics.com

Dimensions are in inches and millimeters unless otherwise specified. Values in brackets are metric equivalents.

Dimensions are shown for reference purposes only. Specifications subject to change.

USA: 1-800-522-6752
Canada: 1-905-470-4425
Mexico: 01-800-733-8926
C. America: 52-55-1106-0803
South America: 55-11-2103-6000
Hong Kong: 852-2735-1628
Japan: 81-44-844-8013
UK: 44-8706-080-208

Technical Documents (Continued)

Application Specifications (Continued)

114-13089	Mini-Universal MATE-N-LOK Sealed Connectors
114-16017	Mini-Universal MATE-N-LOK Connectors
114-19048	AMP-DUAC Receptacles (Use of)
114-49000	.093 Commercial Pin and Socket Connectors
114-49001	Commercial MATE-N-LOK IDC Insulation Displacement Connectors

Instruction Sheets provide instructions for assembling or applying the product. They are intended for the Manufacturing Assembler or Operator.

408-3186	Terminating Head (PN 231894-1) (Commercial MATE-N-LOK IDC Connector)
408-3200	Universal MATE-N-LOK II Connectors (Housings, Contacts and Accessories)
408-3231	(MR) Miniature Rectangular Connectors (Pin Housing, Socket Housing, Contacts, and Accessories)
408-3234	Mini-Universal MATE-N-LOK Connectors
408-3320	Universal MATE-N-LOK Strain Relief Assembly and Keying Plug
408-3392	Universal MATE-N-LOK Splash Proof Seals
408-3393	Mini-Universal MATE-N-LOK 2 Connectors
408-4118	Contact Extraction Tool (PN 189727-1)
408-4322	Contact Extraction Tools [PN 691458-1 (Pins) and 691458-2 (Sockets)]
408-4370	Contact Extraction Tool (PN 318831-1)
408-4371	Contact Extraction Tool (PN 318851-1)
408-4375	Contact Extraction Tool (PN 318837-1)
408-4378	Extraction Tool (PN 318845-1)
408-6790	Hand Tool Handle (PN 58074-1)
408-7158	Contact Extraction Tools [PN 1-305183-1 (Pins) and 1-305183-2 (Sockets)]
408-7166	Commercial MATE-N-LOK Panel Mount Connector
408-7200	Commercial MATE-N-LOK Free-Hanging Connector
408-7201	Commercial MATE-N-LOK Detent Engagement Connectors, 2 and 3 circuit
408-7209	Commercial MATE-N-LOK Commoning Tabs
408-7211	Pin and Socket Extraction Tool (PN 465644-1)
408-7215	Commercial MATE-N-LOK Single Circuit Connector
408-7300	MATE-N-LOK Contact and Housing Selection Charts
408-7347	Contact Insertion Tool (PN 91002-1)
408-7582	Commercial MATE-N-LOK Keying Plug
408-7714	Universal MATE-N-LOK Connectors
408-7763	Power Unit (PN 91112-2)
408-7984	Contact Insertion Tool (PN 455830-1)
408-9330	Head (PN 231920-2) (Used with Arbor Tool PN 91085-2)
408-9436	Latch Disengaging Tool (PN 58382-1)
408-9570	Contact Extraction Tool (PN 455822-2)
408-10003	Contact Retention Test Tool (PN 1586700-1)
408-10017	Universal MATE-N-LOK Sealed Bulkhead Connectors
411-5105	Mini-Universal MATE-N-LOK Connectors
411-5638	Power Double Lock (PDL) Connectors

Dimensions are in inches and millimeters unless otherwise specified. Values in brackets are metric equivalents.
Dimensions are shown for reference purposes only. Specifications subject to change.
USA: 1-800-522-6752
Canada: 1-905-470-4425
Mexico: 01-800-733-8926
C. America: 52-55-1106-0803
South America: 55-11-2103-6000
Hong Kong: 852-2735-1628
Japan: 81-44-844-8013
UK: 44-8706-080-208

Application Tooling

Semiautomatic Machines

AMP-O-LECTRIC Model "G" Terminating Machines, 354500-1, -9, -11

Semiautomatic bench machines for crimping reeled terminals and contacts, featuring a quiet and reliable direct motor drive, microprocessor controls for ease of setup and operation, and guarding and lighting designed for operator convenience and safety. All models are equipped with either manual or automatic precision adjustment of crimp height. Machine-mounted sensors are available for crimp quality monitoring using conventional miniature-style applicators.

Specifications

Width—18.7-25.3 [475-643] depending on applicator type
Depth—21.5-28.1 [546-713] depending on applicator type
Height—20 [508]
Weight—240 lb [110 kg]
Electrical—120 or 220 VAC, 50 or 60 Hz
Air—90-110 psi [6.21-7.59 bar], 6 scfm [0.00282 m^3/s] when required with air-feed applicators
Wire Range—26-10 AWG [0.12-6 mm^2] solid or stranded, depending on product applied

For more information, request Catalog **65828**, Catalog **82275 [Crimp Quality Monitor (CQM)].**

AMP-O-MATIC Stripper-Crimper Machine, 854040-3, -4

Semiautomatic bench crimping machines that also strip the wire, and are therefore used for terminating jacketed cable. Feature manual precision adjustment of crimp height, keyed strip blades for faster, more accurate setups, and an efficient scrap removal system. All adjustments can be made from the front of the machines without special tools. Available with crimp quality monitoring.

Specifications

Width—14 [355]
Depth—18 [457]
Height—33 [838] without reel
Weight—150 lb [68 kg]
Electrical—120 VAC, 50 or 60 Hz, .5 A
Air—80-100 psi [5.52-6.90 bar], 3.5 scfm [0.00165 m^3/s]
Wire Range—32-14 AWG [0.03-2 mm^2]

For more information, request Catalog **65004.**

AMP 3K/40 and AMP 5K/40 Terminators

As value oriented terminators, the AMP 3K/40 and AMP 5K/40 are designed for customers that require the increased output and quality of a semi-automatic machine at a competitive price. By incorporating the most commonly requested features as standard and offering a long list of optional equipment, these terminators offer flexibility to meet the specific needs of various applications at the lowest possible cost.

Optional Stripping Module for the AMP 3K/40, AMP 5K/40 and AMP-O-LECTRIC Model G Terminators

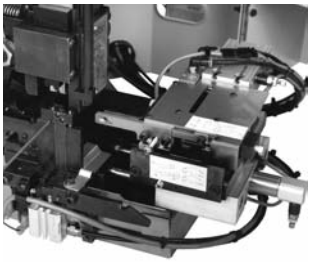

The combination of the Stripping Module with the AMP-O-LECTRIC Model G Terminator or the AMP 3K/40, 5K/40 provides an economical, proficient method of stripping wire and crimping terminals on the same machine. Wires are stripped moments before crimping, meaning there is virtually no chance of damaging wire conductors during handling or storage. Once the wire is fed into the start sensor the Stripping Module does the rest, improving placement accuracy.

For more information, request Catalog **1309085.**

Crimp Quality Monitor

This system measures the crimp height of each termination as it is made. It also evaluates the quality of each crimp. If a crimp is questionable, the monitor alerts the operator with both visual and audible alarms. It also features ports for printing and networking. For use with AMP-O-LECTRIC Model "G" and AMP-O-MATIC Stripper-Crimper Machines, the monitor is mounted to the machine. For use with AMPOMATOR CLS IV+ Machines, it is integrated into the machine's operating system, with the displays appearing on the machine's touch screen.

For more information, request Catalog **82275.**

Note: This listing is for reference purposes only. To obtain part numbers for specific applications call Technical Support.

Application Tooling (Continued)

Automatic Machines

AMPOMATOR System III Leadmaker

The AMPOMATOR System III Leadmaker is designed for the demands of low-volume/high-mix manufacturing and precision quality. This leadmaker combines the best wire processing capabilities with new technologies in terminal feeding and machine set-up found in the System III Applicator to offer significant advantages for higher throughput and efficiencies.
Request Catalog 1654956-5.

System III Applicator

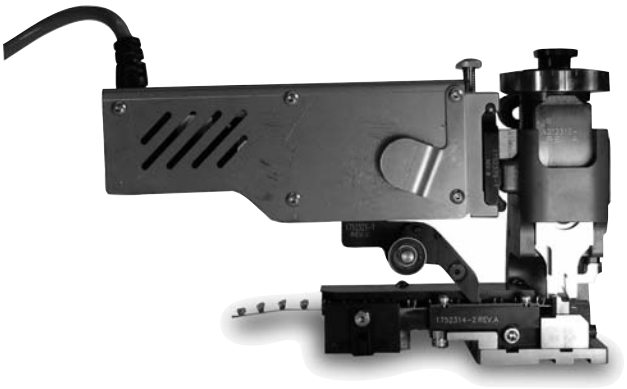

The System III Applicator introduces several new technologies into the applicator including a precision servo-electric motorized feeding system, a built-in data module for storing terminal crimp and set-up information, a precision fit round ram, and a newly designed terminal depressor. It still utilizes the proven quality of the HD-M crimper and anvil tooling.

AMPOMATOR CLS IV+ Lead-Making Machines, 356500-1, -2

Fully-automatic machines that measure, cut, strip and terminate single leads. Microprocessor-controlled, and programmed and operated using an easy-to-follow, menu-driven touchscreen. Features include direct-drive terminating units with precision crimp height adjustment, fully programmable setups, wire runout and splice detection, and motorized pre-feed with wire straightener. Crimp quality monitoring is also available.

Specifications

Width—159 [4 039]
Depth—68 [1 730]
Height—90 [2 285] min., with 24 [610] dia. reel
Weight—2 000 lb [907 kg]
Electrical—220 VAC, 50 or 60 Hz, 1 ∅, 20 A with neutral and ground
Air—90 psi [6.21 bar], 15 scfm [0.00708 m^3/s] sustained
Wire Range—26-10 AWG [0.12-6 mm^2] stranded, 26-16 AWG [0.12-1.4 mm^2] solid
Lead Lengths—3-90 [76.2-2 286], 90-1 000 [2 286-25 400] with long lead conveyors

For more information, request Catalog **124324.**

EDGE Electronic Applicator Counter

The new, versatile EDGE applicator counter tracks wearable tool usage for the most effective maintenance planning. The completely electronic counter, with clear LCD display, indicates cycles since installation. By performing maintenance at measured intervals with pre-set limits, operators avoid breakdowns and rejects caused by tool wear or mis-adjustment.

For more information, request Catalog **1773385**.

Catalog 82181
Revised 4-08

www.tycoelectronics.com

Dimensions are in inches and millimeters unless otherwise specified. Values in brackets are metric equivalents.

Dimensions are shown for reference purposes only. Specifications subject to change.

USA: 1-800-522-6752
Canada: 1-905-470-4425
Mexico: 01-800-733-8926
C. America: 52-55-1106-0803
South America: 55-11-2103-6000
Hong Kong: 852-2735-1628
Japan: 81-44-844-8013
UK: 44-8706-080-208

Application Tooling (Continued)

Applicator Styles

End- and Side-Feed Heavy-Duty Miniature (HDM) Applicators

- **Handle a wide variety of products**
- **Used with both semi- and fully-automatic machines**
- **Quickly interchangeable to run different products**
- **Easily repaired**
- **Simple dial-in settings to handle similar products and various wire sizes**

Stripper-Crimper (SCA) Applicators

- **For use with AMP-O-MATIC Stripper-Crimper Machines**
- **Terminate a wide variety of open-barrel products**
- **Quickly interchangeable to run different products**
- **Easily repaired**
- **Simple dial-in settings to handle similar products and various wire sizes**
- **CQM applicators are available**

Crimp Quality Monitor (CQM) Applicators

- **Same basic features as regular HDM and SCA applicators**
- **Recommended for use with machines featuring manual or automatic precision-adjust**
- **Use two built-in sensors to provide the Crimp Quality Monitor with data to measure crimp height, and evaluate the quality of each crimp**

Applicator and Hand Tool Selection Guide

Density	Product Line	Applicators A	Applicators B	Applicators C	Hand Tools D	Hand Tools E
High	2.5 mm Signal Double Lock (SDL)	*	*	*	X	-
	Micro MATE-N-LOK 3 mm	X	X	X	X	-
	Grace Inertia Connectors (GIC) 3.5	*	*	*	X	-
	.062 Commercial Pin and Socket	X	X	X	-	X
	Power Double Lock (PDL)	*	*	*	X	-
	Mini-Universal MATE-N-LOK	X	X	X	X	X
	Sealed Mini-Universal MATE-N-LOK	X	X	X	X	-
	Mini-Universal MATE-N-LOK 2	X	X	X	X	X
	(MR) Miniature Rectangular	X	X	X	X	-
	VAL-U-LOK Connector System	X	-	-	-	X
	AMP-DUAC	X	X	-	X	-
Standard	5.0 mm Power Key Connectors (PKC)	*	*	*	X	-
	.093 Commercial Pin and Socket	X	X	X	-	X
	Commercial MATE-N-LOK	X	X	X	X	X
	.140 MATE-N-LOK	X	X	X	X	-
	Universal MATE-N-LOK	X	X	X	X	X
	Universal MATE-N-LOK II	X	X	X	X	X
	.156 MATE-N-LOK	X	-	-	X	-

A—Heavy Duty Miniature (HDM) Applicators
B—Stripper-Crimper Applicators (SCA)
C—Crimp Quality Monitor (CQM) Applicators
D—CERTI-CRIMP Hand Tool
E—PRO-CRIMPER III Commercial Hand Tool
* Contact the Tooling Assistance Center (TAC) at 1-800-722-1111 for Applicator Part Numbers.

Related Product Data

Contacts

2.5 mm Signal Double Lock (SDL)—page 12
Micro MATE-N-LOK 3 mm—page 22
Grace Inertia Connectors (GIC) 3.5—page 50
.062 Commercial Pin and Socket—page 55
Power Double Lock (PDL)—page 61
Mini Universal MATE-N-LOK—page 84
Mini Universal MATE-N-LOK 2—pages 100-101
(MR) Miniature Rectangular—page 112
VAL-U-LOK Connector System—page 120
AMP-DUAC—pages 126-127
5.0 mm Power Key Connectors (PKC)—page 137
.093 Commercial Pin and Socket—page 145
Commercial MATE-N-LOK—pages 155-156
.140 MATE-N-LOK—page 166
Universal MATE-N-LOK—pages 172-173
Universal MATE-N-LOK II—page 192
.156 MATE-N-LOK—page 203

Mechanical Hand Tools

CERTI-CRIMP II Straight Action Hand Tools (SAHT) 91501-1, 91502-1

Premium grade hand tools. Feature ratchet control to provide complete crimp cycle. Die sets close in a straight line. Include a contact locator and wire stop, plus an insulation crimp adjustment lever, when applicable. Approximate weight 1.3 lb [0.59 kg]

For more information, request Catalog **65780**.

Note: This listing is for reference purposes only. To obtain part numbers for specific applications call Technical Support.

Catalog 82181
Revised 4-08
www.tycoelectronics.com

Dimensions are in inches and millimeters unless otherwise specified. Values in brackets are metric equivalents.

Dimensions are shown for reference purposes only. Specifications subject to change.

USA: 1-800-522-6752
Canada: 1-905-470-4425
Mexico: 01-800-733-8926
C. America: 52-55-1106-0803
South America: 55-11-2103-6000
Hong Kong: 852-2735-1628
Japan: 81-44-844-8013
UK: 44-8706-080-208

Application Tooling (Continued)

Hand Tools

Related Product Data

Contacts

2.5 mm Signal Double Lock (SDL)—page 12
Micro MATE-N-LOK 3 mm—page 22
Grace Inertia Connectors (GIC) 3.5—page 50
.062 Commercial Pin and Socket—page 55
Power Double Lock (PDL)—page 61
Mini Universal MATE-N-LOK—page 86
Mini Universal MATE-N-LOK 2—pages 100-101
(MR) Miniature Rectangular—page 112
VAL-U-LOK Connector System—page 120
AMP-DUAC—pages 126-127
5.0 mm Power Key Connectors (PKC)—page 137
.093 Commercial Pin and Socket—page 145
Commercial MATE-N-LOK—pages 155-156
.140 MATE-N-LOK—page 166
Universal MATE-N-LOK—pages 172-173
Universal MATE-N-LOK II—page 192
.156 MATE-N-LOK—page 203

CERTI-CRIMP II Hand Tool

Catalog 65780

PRO-CRIMPER III Hand Tool

Catalog 82276

Features	CERTI-CRIMP Hand Tool	PRO-CRIMPER III Hand Tool
Field Repair/Prototyping	X	X
OEM Applications/Low Volume Production	X	—
Ratchet Control	X	X
Brush/Bellmouth Control	X	X
Precision Crimp Height Control	X	X
Little/No Operator Training	X	—
Insulation Adjustment	X	—
Repairable	X	—

Density	Product Line	CERTI-CRIMP Hand Tool		PRO-CRIMPER III Hand Tool	
		Part Number	Instruction Sheet	Part Number	Instruction Sheet
High	2.5 mm Signal Double Lock (SDL)	234603-1	411-5735	—	—
		234604-1	411-5736	—	—
	Micro MATE-N-LOK 3 mm	91501-1	408-8547	—	—
		91502-1	408-8547	—	—
	Grace Inertia Connectors (GIC) 3.5	1596277-1	411-78101	—	—
	.062 Commercial Pin & Socket	—	—	90870-1	408-9965
		—	—	90869-1	408-9964
	Power Double Lock (PDL)	91567-1	408-8547	—	—
		91569-1	408-8547	—	—
	Mini-Universal MATE-N-LOK and Sealed Mini-Universal MATE-N-LOK	91529-1	408-8547	90758-1	408-9938
		91522-1	408-8547	90759-1	408-9962
		91594-1	408-8547	90760-1	408-9963
		90717-2	408-4443	—	—
	Mini-Universal MATE-N-LOK 2	91529-1	408-8547	—	—
		91522-1	408-8547	—	—
		91594-1	408-8547	—	—
		90717-2	408-4443	—	—
	(MR) Miniature Rectangular	91534-1	408-8547	58514-1	408-9973
		91526-1	408-8547	58514-1	408-9973
	VAL-U-LOK Connector System	—	—	91387-1	408-8917
		—	—	91388-1	408-8918
	AMP-DUAC	90714-1	408-4385	—	—
		734202-2	—	—	—
Standard	5.0 mm Power Key Connectors (PKC)	—	—	—	—
	.093 Commercial Pin & Socket	—	—	90872-1	408-9967
		—	—	90871-1	408-9966
	Commercial MATE-N-LOK	91515-1	408-8547	—	—
		91512-1	408-8547	90574-1	408-9886
		91504-1	408-8547	90575-1	408-9887
	.140 MATE-N-LOK	91552-1	408-8547	—	—
		69710-1[1]	408-2095	—	—
		58373-1[2]	408-9442	—	—
		58374-1[2]	408-9442	—	—
	Universal MATE-N-LOK and Universal MATE-N-LOK II	58439-1	408-9591	—	—
		91510-1	408-8547	90548-1	408-9885
		91500-1	408-8547	90546-1	408-9883
		91508-1	408-8547	90547-1	408-9884
		91506-1	408-8547	90547-1	408-9884
		69710-1[1]	408-2095	—	—
		58380-1[2]	408-9433	—	—
		58380-2[2]	408-9433	—	—
	.156 MATE-N-LOK	58631-1	408-4341	—	—
		58632-1	408-4340	—	—

[1]Hand tool requires die set. [2]Die set.
Note: This listing is for reference purposes only. To obtain part numbers for specific applications call Technical Support.

Catalog 82181
Revised 4-08
www.tycoelectronics.com

Dimensions are in inches and millimeters unless otherwise specified. Values in brackets are metric equivalents.

Dimensions are shown for reference purposes only. Specifications subject to change.

USA: 1-800-522-6752
Canada: 1-905-470-4425
Mexico: 01-800-733-8926
C. America: 52-55-1106-0803
South America: 55-11-2103-6000
Hong Kong: 852-2735-1628
Japan: 81-44-844-8013
UK: 44-8706-080-208

Applicator Options

	Strip Form Contact Part Number		Heavy-Duty Miniature Applicator Part Numbers			
			Used on Bench Top Terminators		Used on Automatic Leadmaking Equipment (*AMPOMATOR* CLS Machine with T or G Terminators)	Used on *AMP-O-MATIC* Stripper-Crimper Machine
	Pin	Socket	*AMP-O-LECTRIC* Model K Machine	*AMP-O-LECTRIC* Model G Machine		
2.5 mm Signal Double Lock (SDL) Contacts	917764-1	917683-1	*	*	*	*
	917765-1	917684-1	*	*	*	*
Micro MATE-N-LOK 3 mm Connector System	1-794608-0	—	1385194-2	1385194-3	1385194-1	—
	1-794608-1	—				
	1-794608-2	—				
	1-794609-0	—	1385377-2	1385377-3	1385377-1	—
	1-794609-1	—				
	1-794609-2	—				
	—	794606-1	680893-2	680893-3	680893-1	—
	—	1-794606-1				
	—	1-794606-2				
	—	794607-1	680894-2	680894-3	680894-1	—
	—	1-794607-1				
	—	1-794607-2				
Grace Inertia Connectors (GIC) 3.5	1565080-1	1565079-1	*	*	*	*
	1612335-1	1612334-1	*	*	*	*
.062 Commercial Pin and Socket Contacts	640391-1	640392-1	466686-2	466686-3	466686-1	466955-1
	640391-5	640392-5				
	—	640392-2				
	—	794046-1				
	350629-1	350628-1	687996-2	687996-3	687996-1	—
	—	350628-2				
	350629-5	350628-5				
	—	350628-6				
	—	794103-1				
Power Double Lock (PDL)	177916-1	177914-1	*	*	*	*
		177914-2†	*	*	*	*
	177917-1	177915-1	*	*	*	*
		177915-2†	*	*	*	*
	† High contact pressure type.					
Mini-Universal MATE-N-LOK Contacts	770835-1	770834-1	567418-2	567418-3	567418-1	—
	1-770835-0	1-770834-0				
	770901-1	770902-1	567066-4	567066-5	567066-3	466990-2
	1-770901-0	1-770902-0				
	770903-1	770904-1	567067-2	567067-3	567067-1	466986-1
	1-770903-0	1-770904-0				
	171636-1	171637-1	680582	567251-1	680582	567902-1
	—	171637-3				
Mini-Universal MATE-N-LOK 2 Contacts	794216-1	794217-1	567418-2	567418-3	567418-1	—
	1-794216-0	1-794217-0				
	794218-1	794219-1	567066-4	567066-5	567066-3	466990-2
	1-794218-0	1-794219-0				
	794220-1	794221-1	680854-2	680854-3	680854-1	466986-1
	1-794220-0	1-794221-0				
	794222-1	794223-1	680582-2	680582-3	—	567902-1
	1-794222-0	1-794223-0				
(MR) Miniature Rectangular Contacts	350968-1	794000-1	466352-2	466352-3	466352-1	—
	350968-2	794000-2				
	350967-1	641294-1	466351-2	466351-4	466351-1	466913-1
	350967-2	641294-2				
	350969-1	—	466351-2	466351-4	466351-1	466913-1
	350969-2	—				

Note: Stripper Crimper (SCA) and Crimp Quality Monitor Applicators may be available. Call Technical Support for Part Numbers.
* Contact the Tooling Assistance Center (TAC) at 1-800-722-1111 for Applicator Part Numbers.
Note: All part numbers are RoHS Compliant.

Dimensions are in inches and millimeters unless otherwise specified. Values in brackets are metric equivalents.

Dimensions are shown for reference purposes only. Specifications subject to change.

USA: 1-800-522-6752
Canada: 1-905-470-4425
Mexico: 01-800-733-8926
C. America: 52-55-1106-0803
South America: 55-11-2103-6000
Hong Kong: 852-2735-1628
Japan: 81-44-844-8013
UK: 44-8706-080-208

Applicator Options (Continued)

	Strip Form Contact Part Number		Heavy-Duty Miniature Applicator Part Numbers			
			Used on Bench Top Terminators		Used on Automatic Leadmaking Equipment (*AMPOMATOR* CLS Machine with T or G Terminators)	Used on *AMP-O-MATIC* Stripper-Crimper Machine
	Pin	Socket	*AMP-O-LECTRIC* Model K Machine	*AMP-O-LECTRIC* Model G Machine		
VAL-U-LOK Connector System	794955-1	794956-1	1385817-2	1385817-3	1385817-1	—
	794955-2	794956-2				
	794955-3	794956-3				
	794955-4	794956-4				
	794957-1	794958-1	1385448-2	1385448-3	1385448-1	—
	794957-2	794958-2				
	794957-3	794958-3				
	794957-4	794958-4				
AMP-DUAC	794576-1	106529-2	680308-2	680308-3	—	567959-1
		1-794138-3				
	794578-1	106528-2	680307-2	680307-3	—	567960-1
		1-794139-3				
	—	1-794140-3	680350-2	680350-3	—	—
		794418-1				
5.0 mm Power Key Connectors (PKC)	—	1376347-1	*	*	*	*
	—	1376348-1	*	*	*	*
.093 Commercial Pin and Socket Contacts	350418-1	350417-1	466656-2	466656-3	466656-1	466922-1
	—	350417-3				
	350418-5	350417-5				
	350416-1	350415-1	466878-2	466878-3	466878-1	466959-1
	350416-5	350415-5				
	770530-1	770529-1	567337-4	567337-6	567337-3	—
	770385-1	770383-1	567273-2	567273-4	567273-3	—
	—	—				
Commercial MATE-N-LOK Contacts	350079-1	350078-1	466426-2	466426-3	466426-1	—
	350079-4	350078-4				
	350079-5	350078-5				
	61116-1	61314-1	466320-2	466320-4	466320-1	466917-1
	61116-4	61314-4				
	61116-5	61314-5				
	61116-6	61314-6				
	61116-7	61314-7				
	61118-1	61117-1	687763-2	687763-6	687763-1	466920-1
	61118-4	61117-4				
	61118-5	61117-5				
	61118-6	61117-6				
	61118-7	61117-7				
	350558-1	350557-1	687898-2	687898-4	687898-1	—
	350558-4	350557-4				
	61527-2	—	466320-2	466320-4	466320-1	466917-1
.140 MATE-N-LOK Contacts	61627-1	61626-1	567306-2	567306-3	567306-1	—
	61627-2	61626-2				
	350201-1	350200-1	567309-2	567309-3	587309-1	—
	350201-2	350200-2				
Universal MATE-N-LOK Contacts	350924-1	350925-1	466616-2	466616-3	—	—
	350924-6	350925-6				
	350561-1	350851-1	466320-2	466320-4	466320-1	466917-1
	—	350570-1				
	350561-2	350851-2				
	—	350570-2				
	350561-7	350851-7				
	—	350570-7				
	350561-3	350570-3				
	—	350570-6				

Note: Stripper Crimper (SCA) and Crimp Quality Monitor Applicators may be available. Call Technical Support for Part Numbers.
* Contact the Tooling Assistance Center (TAC) at 1-800-722-1111 for Applicator Part Numbers.
Note: All part numbers are RoHS Compliant.

Dimensions are in inches and millimeters unless otherwise specified. Values in brackets are metric equivalents.

Dimensions are shown for reference purposes only. Specifications subject to change.

USA: 1-800-522-6752
Canada: 1-905-470-4425
Mexico: 01-800-733-8926
C. America: 52-55-1106-0803
South America: 55-11-2103-6000
Hong Kong: 852-2735-1628
Japan: 81-44-844-8013
UK: 44-8706-080-208

Applicator Options (Continued)

	Strip Form Contact Part Number		Heavy-Duty Miniature Applicator Part Numbers			
			Used on Bench Top Terminators		Used on Automatic Leadmaking Equipment (*AMPOMATOR* CLS Machine with T or G Terminators)	Used on *AMP-O-MATIC* Stripper-Crimper Machine
	Pin	Socket	*AMP-O-LECTRIC* Model K Machine	*AMP-O-LECTRIC* Model G Machine		
Universal MATE-N-LOK Contacts (Continued)	350218-1	350536-1	687763-2	687763-6	687763-1	466920-1
	350218-2	350536-2				
	350218-7	350536-7				
	350218-3	350536-3				
	350218-6	350536-6				
	350538-1	350537-1	687926-2	687926-6	687926-1	466989-1
	350538-2	350537-2				
	350538-7	350537-7				
	350538-3	350537-3				
	350538-6	350537-6				
	350873-1	350874-1	466588-2	466588-3	466588-1	—
	350873-3	350874-3				
	350922-3	350923-3	466597-2	466597-3	466597-1	—
	350922-6	350923-6				
	350922-4	350923-4				
	350699-1	—	466320-2	466320-4	466320-1	466917-1
	350699-2	—				
	350699-7	—				
	350687-1	—	687763-2	687763-6	687763-1	466920-1
	350687-2	—				
	350687-7	—				
	350700-1	—	687926-2	687926-6	687926-1	466989-1
	350700-2	—				
	350700-7	—				
	770210-1	—	567216-2	567216-3	567216-1	466920-1
	350654-1	—	687763-2	687763-6	687763-1	
	770234-3	—	466597-2	466597-3	466597-1	
Universal MATE-N-LOK II Contacts	770011-6	770012-6	—	567252-4	567252-1	—
	770009-1	—	—	567214-4	567214-1	567914-1
	1-770009-0	—				
	—	770010-3				
	—	1-770010-0				
	770007-1	—	—	567213-4	567213-1	567913-1
	1-770007-0	—				
	—	770008-3				
	—	1-770008-0				
	770005-1	—	—	567212-4	567212-1	—
	1-770005-0	—				
	—	770006-3				
	1-770005-1	1-770006-0				
	770003-3	770004-3	—	567211-4	567211-1	—
	1-770003-0	1-770004-0				
	770193-1	—	—	567213-4	567213-1	567913-1
	1-770193-0	—				
	770194-1	—	—	567212-4	567212-1	—
	1-770194-0	—				
.156 MATE-N-LOK Contacts	61086-1	61085-1	466462-1	466462-3	466462-1	—
	61234-1	61233-1	687765-2	687765-2	—	—

Note: Stripper Crimper (SCA) and Crimp Quality Monitor Applicators may be available. Call Technical Support for Part Numbers.
* Contact the Tooling Assistance Center (TAC) at 1-800-722-1111 for Applicator Part Numbers.
Note: All part numbers are RoHS Compliant.

Dimensions are in inches and millimeters unless otherwise specified. Values in brackets are metric equivalents.

Dimensions are shown for reference purposes only. Specifications subject to change.

USA: 1-800-522-6752
Canada: 1-905-470-4425
Mexico: 01-800-733-8926
C. America: 52-55-1106-0803
South America: 55-11-2103-6000
Hong Kong: 852-2735-1628
Japan: 81-44-844-8013
UK: 44-8706-080-208

Product Feature Comparisons

High Density	2.5 mm Signal Double Lock (SDL)	Micro MATE-N-LOK 3 mm	Grace Inertia Connectors (GIC) 3.5	.062 Commercial Pin & Socket	Power Double Lock (PDL)	Mini-Universal MATE-N-LOK	Sealed Mini-Universal MATE-N-LOK	Mini-Universal MATE-N-LOK 2	(MR) Miniature Rectangular	VAL-U-LOK Connector System	AMP-DUAC
Wire AWG —											
Maximum	20	20	18	18	16	16	18	16	18	18	18
Minimum	26	30	26	30	26	30	26	30	26	26	26
Current Rating —											
10 AWG Wire	—		—		—					—	—
14 AWG Wire	—	—	—	—	—	—	—	—	—	—	—
16 AWG Wire	—		—		14					—	—
18 AWG Wire	—	**	7	17	—	9	9	10.5	6	9	9
20 AWG Wire	3		—		—					—	—
Max. Operating Voltage (AC or DC)	50	250	300	250	300	600	600	600	250	600	600
Flammability Rating —											
UL 94V-0	Yes	Yes	Yes	No	Yes	Yes	Yes	Yes	Yes	Yes	Yes
UL 94V-2	No	No	No	Yes	No	Yes*	No	Yes	No	Yes	Yes
Approvals —											
UL	Yes	Yes	Yes	Yes	Yes	Yes	Yes	Submitted	Yes	Yes	Yes
CSA	Yes	Yes	Yes	Yes	Yes	Yes	Yes	Submitted	Yes	Yes	Yes
VDE	Yes	Yes	—	No	Yes	Yes	Yes	Submitted	No	—	No
Contact Material —											
Brass	No	Yes	Yes	Yes	Yes	Yes	Yes	Yes	No	Yes	—
Phos. Bronze	Yes	Yes	No	Yes	No	Yes	Yes	No	Yes	Yes	Yes
Plating Finish —											
Tin Plating	Yes	Yes	Yes	Yes	Yes	Yes	Yes	Yes	Yes	Yes	Yes
Gold Plating	No	Yes	No	Yes	No	Yes	Yes	Yes	Yes	Yes	Yes
Centerline Spacing —	.098 [2.50]	.118 [3.00]	.137 [3.50]	.145 [3.68]	.156 [3.96] 256 [6.50] .312 [7.92] .512 [13.00]	.163 [4.14]	.163 [4.14]	.163 [4.14]	.165 [4.20]	.165 [4.20]	.165 [4.20]
Housings —											
Panel Mount	No	Yes	No	Yes	Yes	Yes	Yes	No	Yes	Yes	Yes
Free-Hanging	Yes	Yes	Yes	Yes	Yes	Yes	No	Yes	Yes	Yes	Yes
Secondary Locking Latches	Yes	No	Yes	No	Yes	No	No	Yes	No	Yes	Yes
Contact Position Control	Yes	No	No	No	No	No	No	Yes	No	No	Yes
In-Line Config.	Yes	Yes	Yes	Yes	Yes	Yes	No	Yes	Yes	Yes	Yes
Dual Row Config.	No	Yes	Yes	No	Yes	Yes	Yes	Yes	No	Yes	Yes
Matrix Config.	No	No	No	Yes	Yes	Yes	No	Yes	Yes	No	No
Accessories —											
Strain Relief	No	No	Yes	No	Yes	Yes	No	No	Yes	No	Yes
Keying Plug	No	No	No	No	No	Yes	Yes	Yes	Yes	No	No
Seals	No	No	No	No	No	Yes	Yes	No	No	No	No
Headers —											
Vertical	Yes	Yes	No	No	Yes	Yes	Yes	Mini-Universal MATE-N-LOK	Yes	Yes	Yes
Blindmate	No	No	No	No	No	Yes	Yes	Mini-Universal MATE-N-LOK	No	Yes	No
Right-Angle	Planned	Yes	No	No	No	Yes	Yes	Mini-Universal MATE-N-LOK	No	Yes	Yes
Positions —											
Minimum	2	2	2	1	1	1	2	2	2	2	2
Maximum	13	24	6	9	12	24	10	24	36	24	24

* Wire-to-Wire Only.
** 5 A on 20 AWG*

Catalog 82181
Revised 4-08

www.tycoelectronics.com

Dimensions are in inches and millimeters unless otherwise specified. Values in brackets are metric equivalents.

Dimensions are shown for reference purposes only. Specifications subject to change.

USA: 1-800-522-6752
Canada: 1-905-470-4425
Mexico: 01-800-733-8926
C. America: 52-55-1106-0803

South America: 55-11-2103-6000
Hong Kong: 852-2735-1628
Japan: 81-44-844-8013
UK: 44-8706-080-208

Product Feature Comparisons (Continued)

Standard Density	5.0 mm Power Key Connectors (PKC)	.093 Commercial Pin & Socket	Commercial MATE-N-LOK	.140 MATE-N-LOK	Universal MATE-N-LOK	Universal MATE-N-LOK II	.156 MATE-N-LOK
Wire AWG—							
Maximum	16	14	14	10	10	10	10
Minimum	24	24	30	20	30	30	20
Current Rating —							
10 AWG Wire	—			28			32.5
14 AWG Wire	—	19	13	—	15	19	—
16 AWG Wire	10			—			—
18 AWG Wire	—	—	—	—	—	—	—
20 AWG Wire	—			—			—
Max. Operating Voltage (AC or DC)	300	250	250	600	600	600	600
Flammability Rating —							
UL 94V-0	Yes	No	Yes	No	Yes	Yes	No
UL 94V-2	No	Yes	Yes	Yes	Yes	No	Yes
Approvals —							
UL	Yes	Yes	Yes	Yes	Yes	Yes	Yes
CSA	Yes	Yes	Yes	Yes	Yes	Yes	No
VDE	No	No	No	No	Yes	Yes	No
Contact Material —							
Brass	Yes	Yes	Yes	Yes	Yes	Yes	Yes
Phos. Bronze	No	Yes	Yes	Yes	Yes	Yes	No
Plating Finish —							
Tin Plating	Yes	Yes	Yes	Yes	Yes	Yes	Yes
Gold Plating	No	Yes	Yes	No	Yes	Yes	No
Centerline Spacing —	.197 [5.00]	.198 [5.03] .250 [6.35] .248 [6.30]	.200 [5.08] .240 [6.10] x .202 [5.13] .195 [4.95] x .360 [9.14]	.240 [6.10]	.250 [6.35]	.250 [6.35]	.390 [9.91]
Housings —							
Panel Mount	No	Yes	Yes	Yes	Yes	Yes	Yes
Free-Hanging	No	Yes	Yes	Yes	Yes	Yes	Yes
Secondary Locking Latches	Yes	No	No	Yes	No	Yes	Yes
Contact Position Control	No	No	No	No	No	Yes	No
In-Line Config.	Yes	Yes	Yes	Yes	Yes	Yes	Yes
Dual Row Config.	Yes	No	Yes	No	No	No	No
Matrix Config.	No	Yes	Yes	Yes	Yes	Yes	No
Accessories —							
Strain Relief	Yes	No	No	No	Yes	Universal MATE-N-LOK	No
Keying Plug	No	No	Yes	No	Yes	Yes	No
Seals	No	No	No	No	Yes	No	No
Headers —							
Vertical	Yes	No	Yes	No	Yes	Universal MATE-N-LOK	No
Blindmate	No	No	No	No	No	No	No
Right-Angle	No	No	Yes	No	Yes	Universal MATE-N-LOK	No
Positions —							
Minimum	2	1	1	2	1	2	3
Maximum	6	15	16	9	15	15	4

* Wire-to-Wire Only.
** 5 A on 20 AWG*

Catalog 82181
Revised 4-08
www.tycoelectronics.com

Dimensions are in inches and millimeters unless otherwise specified. Values in brackets are metric equivalents.

Dimensions are shown for reference purposes only. Specifications subject to change.

USA: 1-800-522-6752
Canada: 1-905-470-4425
Mexico: 01-800-733-8926
C. America: 52-55-1106-0803
South America: 55-11-2103-6000
Hong Kong: 852-2735-1628
Japan: 81-44-844-8013
UK: 44-8706-080-208

Non-Compliant to RoHS Compliant Part Number Cross Reference

Non-Compliant Part Number	RoHS Compliant Part Number
350209-2	1586512-2
350210-2	1586514-2
350211-2	1586515-2
350211-3	1586515-3
350212-2	1586518-2
350213-2	1586520-2
350214-2	1586522-2
350220-2	1586524-2
1-350375-0	2-350375-0
1-350376-0	2-350376-0
1-350377-0	2-350377-0
1-350378-1	2-350378-1
1-350379-1	2-350379-1
1-350380-1	2-350380-1
350424-2	1586525-2
350425-2	1586526-2
350426-2	1586528-2
350428-2	350428-4
350429-2	350429-4
350430-2	350430-4
350431-2	350431-4
350432-2	350432-4
350433-2	350433-4
350434-2	350434-4
350539-2	1586530-2
350541-2	1586532-2
350543-2	1586534-2
350544-2	1586536-2
350582-2	350582-4
350583-2	350583-4
350584-2	350584-4
350585-2	350585-4
350586-2	350586-4
350587-2	350587-4
350588-2	350588-4
350641-2	1586539-2
350711-2	350711-4
350712-2	350712-4
350713-2	350713-4
350714-2	350714-4
350714-3	350714-5
350732-2	350732-4
350737-2	350737-4
350738-2	350738-4
350742-2	350742-4
350759-3	350759-5
350760-3	350760-5
350761-3	350761-5
350762-3	350762-5
350763-3	350763-5
350764-3	350764-5
350765-3	350765-5
350786-2	350786-3
350787-2	350787-3
350789-2	350789-3
350790-2	350790-3
350792-2	350792-3
350793-2	350793-3
350824-2	350824-4
350825-2	350825-4
350826-2	350826-4

Non-Compliant Part Number	RoHS Compliant Part Number
350827-2	350827-4
350828-2	350828-4
350829-2	350829-4
350830-2	350830-4
350832-2	350832-4
350833-2	350833-4
350834-2	350834-4
350835-2	350835-4
350836-2	350836-4
350837-2	350837-4
2-350942-0	3-350942-0
2-350943-0	3-350943-0
2-350944-0	3-350944-0
2-350945-0	3-350945-0
350988-3	350988-5
350989-3	350989-5
350990-3	350990-5
350991-3	350991-5
1-380935-0	2-380935-0
1-380936-0	2-380936-0
1-380937-0	2-380937-0
2-380991-0	2-1586544-0
2-380999-0	2-1586546-0
640466-2	640466-3
640467-2	640467-3
640497-2	2-640497-2
640497-4	2-640497-4
640498-2	2-640498-2
640498-4	2-640498-4
640499-2	2-640499-2
640499-4	2-640499-4
640500-2	2-640500-2
640500-4	2-640500-4
640501-2	2-640501-2
640501-4	2-640501-4
640502-2	2-640502-2
640502-4	2-640502-4
640503-2	2-640503-2
640503-4	2-640503-4
640504-2	2-640504-2
640504-4	2-640504-4
640505-2	2-640505-2
640505-4	2-640505-4
640506-2	2-640506-2
640506-4	2-640506-4
640583-2	640583-3
640584-2	640584-3
640900-2	640900-3
640901-2	640901-3
641831-2	641831-3
641832-2	641832-3
641963-2	641963-3
641964-2	641964-3
641970-2	641970-3
641971-2	641971-3
641972-2	641972-3
641974-2	641974-3
641976-2	641976-4
643228-2	3-643228-0
643230-2	3-643230-0
643232-2	3-643232-0

Non-Compliant Part Number	RoHS Compliant Part Number
643234-2	3-643234-0
643236-2	3-643236-0
643410-2	643410-3
643412-2	643412-3
643414-2	643414-3
643424-2	643424-3
643426-2	643426-3
770003-4	1-770003-0
770004-4	1-770004-0
770005-2	1-770005-0
770005-4	1-770005-1
770006-4	1-770006-0
770007-2	1-770007-0
770008-4	1-770008-0
770010-4	1-770010-0
770166-1	1-770166-0
770166-2	1-770166-1
770170-1	1-770170-0
770170-2	1-770170-1
770174-1	1-770174-0
770174-2	1-770174-1
770178-1	1-770178-0
770178-2	1-770178-1
770182-1	1-770182-0
770182-2	1-770182-1
770186-1	1-770186-0
770186-2	1-770186-1
770190-1	1-770190-0
770190-2	1-770190-1
770193-2	1-770193-0
770194-2	1-770194-0
770246-4	1-770246-0
770247-4	1-770247-0
770248-2	1-770248-0
770249-4	1-770249-0
770250-2	1-770250-0
770251-4	1-770251-0
770252-2	1-770252-0
770254-2	1-770254-0
770255-2	1-770255-0
770262-2	770262-3
770328-1	1586627-1
1-770328-1	1-1586627-1
770621-1	1-770621-0
770621-2	1-770621-1
770743-1	1-770743-0
770743-2	1-770743-1
770834-3	1-770834-0
770834-6	1-770834-1
770835-3	1-770835-0
770858-1	1-770858-0
770858-2	1-770858-1
770859-1	1-770859-0
770859-2	1-770859-1
770872-1	1-770872-0
770872-2	1-770872-1
770873-1	1-770873-0
770873-2	1-770873-1
770874-2	1-770874-1
770875-1	1-770875-0
770875-2	1-770875-1

Non-Compliant Part Number	RoHS Compliant Part Number
770876-1	1-770876-0
770876-2	1-770876-1
770901-3	1-770901-0
770902-3	1-770902-0
770902-6	1-770902-1
770903-3	1-770903-0
770903-6	1-770903-1
770904-3	1-770904-0
770904-6	1-770904-1
770966-1	1-770966-0
770966-2	1-770966-1
770967-1	1-770967-0
770967-2	1-770967-1
770968-1	1-770968-0
770968-2	1-770968-1
770969-1	1-770969-0
770969-2	1-770969-1
770970-1	1-770970-0
770970-2	1-770970-1
770971-1	1-770971-0
770971-2	1-770971-1
770972-1	1-770972-0
770972-2	1-770972-1
770973-1	1-770973-0
770973-2	1-770973-1
770974-1	1-770974-0
770974-2	1-770974-1
770985-3	1-770985-0
770986-3	1-770986-0
770987-3	1-770987-0
770988-3	1-770988-0
794040-1	1-794040-0
794040-2	1-794040-1
794058-3	1-794058-0
794059-3	1-794059-0
794065-1	1-794065-0
794065-2	1-794065-1
794066-1	1-794066-0
794066-2	1-794066-1
794067-1	1-794067-0
794067-2	1-794067-1
794068-1	1-794068-0
794068-2	1-794068-1
794069-1	1-794069-0
794069-2	1-794069-1
794070-1	1-794070-0
794070-2	1-794070-1
794071-1	1-794071-0
794071-2	1-794071-1
794072-1	1-794072-0
794072-2	1-794072-1
794073-1	1-794073-0
794073-2	1-794073-1
794074-1	1-794074-0
794074-2	1-794074-1
794075-2	1-794075-1
794076-1	1-794076-0
794076-2	1-794076-1
794077-1	1-794077-0
794077-2	1-794077-1
794078-1	1-794078-0

Catalog 82181
Revised 4-08
www.tycoelectronics.com

Dimensions are in inches and millimeters unless otherwise specified. Values in brackets are metric equivalents.

Dimensions are shown for reference purposes only. Specifications subject to change.

USA: 1-800-522-6752
Canada: 1-905-470-4425
Mexico: 01-800-733-8926
C. America: 52-55-1106-0803
South America: 55-11-2103-6000
Hong Kong: 852-2735-1628
Japan: 81-44-844-8013
UK: 44-8706-080-208

Non-Compliant to RoHS Compliant Part Number Cross Reference (Continued)

Non-Compliant Part Number	RoHS Compliant Part Number
794078-2	1-794078-1
794079-1	1-794079-0
794079-2	1-794079-1
794105-1	1-794105-0
794105-2	1-794105-1
794106-1	1-794106-0
794106-2	1-794106-1
794107-1	1-794107-0
794107-2	1-794107-1
794108-1	1-794108-0
794108-2	1-794108-1
794126-1	1-794126-0
794130-2	1-794130-1
794136-3	1-794136-1
794137-3	1-794137-1
794138-3	1-794138-3
794139-3	1-794139-3
794140-3	1-794140-3
794141-3	1-794141-3
794142-3	1-794142-3
794143-3	1-794143-3
794181-1	1-794181-1
794181-2	1-794181-2
794216-3	1-794216-0
794217-3	1-794217-0
794218-3	1-794218-0
794219-3	1-794219-0
794220-3	1-794220-0
794221-3	1-794221-0
794222-3	1-794222-0
794223-3	1-794223-0
794224-3	1-794224-0
794225-3	1-794225-0
794226-3	1-794226-0
794227-3	1-794227-0
794228-3	1-794228-0
794229-3	1-794229-0
794230-3	1-794230-0
794231-3	1-794231-0
794302-1	1-794302-1
794302-2	1-794302-2
794303-1	1-794303-1
794303-2	1-794303-2
794304-1	1-794304-1
794304-2	1-794304-2
794305-1	1-794305-1
794305-2	1-794305-2
794306-1	1-794306-1
794306-2	1-794306-2
794307-1	1-794307-1
794307-2	1-794307-2
794308-1	1-794308-1
794308-2	1-794308-2
794309-1	1-794309-1
794309-2	1-794309-2
794310-1	1-794310-1
794310-2	1-794310-2
794311-1	1-794311-1
794311-2	1-794311-2
794312-1	1-794312-1
794312-2	1-794312-2

Non-Compliant Part Number	RoHS Compliant Part Number
794313-1	794313-3
794313-2	794313-4
794325-1	1-794325-0
794326-2	1-794326-1
794327-1	1-794327-0
794327-2	1-794327-1
794328-1	1-794328-0
794330-2	1-794330-1
794349-1	1-794349-1
794349-2	1-794349-2
794350-1	1-794350-1
794350-2	1-794350-2
794351-1	1-794351-1
794351-2	1-794351-2
794352-1	1-794352-1
794352-2	1-794352-2
794353-1	1-794353-1
794353-2	1-794353-2
794354-1	1-794354-1
794354-2	1-794354-2
794355-1	1-794355-1
794355-2	1-794355-2
794356-1	1-794356-1
794356-2	1-794356-2
794357-1	1-794357-1
794357-2	1-794357-2
794358-1	1-794358-1
794358-2	1-794358-2
794359-1	1-794359-1
794359-2	1-794359-2
794360-1	1-794360-1
794360-2	1-794360-2
794374-1	1-794374-0
794374-2	1-794374-1
794406-3	1-794406-0
794407-3	1-794407-0
794415-1	1-794415-1
794415-2	1-794415-2
794429-1	1-794429-1
794429-2	1-794429-2
794448-1	1-794448-1
794449-1	1-794449-1
794453-1	1-794453-1
794453-2	1-794453-2
794454-1	1-794454-1
794454-2	1-794454-2
794455-1	1-794455-1
794455-2	1-794455-2
794466-1	1-794466-1
794466-2	1-794466-2
794467-1	1-794467-1
794467-2	1-794467-2
794468-1	1-794468-1
794468-2	1-794468-2
794469-1	1-794469-1
794469-2	1-794469-2
794470-1	1-794470-1
794470-2	1-794470-2
794471-1	1-794471-1
794471-2	1-794471-2
794472-1	1-794472-1

Non-Compliant Part Number	RoHS Compliant Part Number
794472-2	1-794472-2
794484-1	1-794484-1
794484-2	1-794484-2
794485-1	1-794485-1
794485-2	1-794485-2
794486-1	1-794486-1
794486-2	1-794486-2
794487-1	1-794487-1
794487-2	1-794487-2
794488-1	1-794488-1
794488-2	1-794488-2
794489-1	1-794489-1
794489-2	1-794489-2
794490-1	1-794490-1
794490-2	1-794490-2
794491-1	1-794491-1
794491-2	1-794491-2
794492-1	1-794492-1
794492-2	1-794492-2
794493-1	1-794493-1
794493-2	1-794493-2
794494-1	1-794494-1
794494-2	1-794494-2
794507-1	1-794507-1
794508-1	1-794508-1
794509-1	1-794509-1
794510-1	1-794510-1
794511-1	1-794511-1
794512-1	1-794512-1
794513-1	1-794513-1
794514-1	1-794514-1
794515-1	1-794515-1
794516-1	1-794516-1
794526-1	1-794526-1
794527-1	1-794527-1
794528-1	1-794528-1
794529-1	1-794529-1
794530-1	1-794530-1
794531-1	1-794531-1
794532-1	1-794532-1
794533-1	1-794533-1
794534-1	1-794534-1
794540-1	1-794540-1
794540-2	1-794540-2
794543-1	1-794543-1
794543-2	1-794543-2
794576-2	794576-4
794578-2	794578-4
794588-1	1-794588-1
794589-1	1-794589-1
794590-1	1-794590-1
794606-2	1-794606-1
794606-3	1-794606-2
794607-2	1-794607-1
794607-3	1-794607-2
794608-1	1-794608-0
794608-2	1-794608-1
794608-3	1-794608-2
794609-1	1-794609-0
794609-2	1-794609-1
794609-3	1-794609-2

Non-Compliant Part Number	RoHS Compliant Part Number
794610-2	1-794610-1
794610-3	1-794610-2
794611-2	1-794611-1
794611-3	1-794611-2
794612-1	1-794612-0
794612-2	1-794612-1
794612-3	1-794612-2
794613-1	1-794613-0
794613-2	1-794613-1
794613-3	1-794613-2
794618-2	3-794618-2
794618-4	3-794618-4
794618-6	3-794618-6
794618-8	3-794618-8
1-794618-0	4-794618-0
1-794618-2	4-794618-2
1-794618-4	4-794618-4
1-794618-6	4-794618-6
1-794618-8	4-794618-8
2-794618-0	5-794618-0
2-794618-2	5-794618-2
2-794618-4	5-794618-4
794619-2	3-794619-2
794619-4	3-794619-4
794619-6	3-794619-6
794619-8	3-794619-8
1-794619-0	4-794619-0
1-794619-2	4-794619-2
1-794619-4	4-794619-4
1-794619-6	4-794619-6
1-794619-8	4-794619-8
2-794619-0	5-794619-0
2-794619-2	5-794619-2
2-794619-4	5-794619-4
794620-2	3-794620-2
794620-4	3-794620-4
794620-6	3-794620-6
794620-8	3-794620-8
1-794620-0	4-794620-0
1-794620-2	4-794620-2
1-794620-4	4-794620-4
1-794620-6	4-794620-6
1-794620-8	4-794620-8
2-794620-0	5-794620-0
2-794620-2	5-794620-2
2-794620-4	5-794620-4
794621-2	3-794621-2
794621-4	3-794621-4
794621-6	3-794621-6
794621-8	3-794621-8
1-794621-0	4-794621-0
1-794621-2	4-794621-2
1-794621-4	4-794621-4
1-794621-6	4-794621-6
1-794621-8	4-794621-8
2-794621-0	5-794621-0
2-794621-2	5-794621-2
2-794621-4	5-794621-4
794622-2	3-794622-2
794622-4	3-794622-4
794622-6	3-794622-6

Catalog 82181
Revised 4-08
www.tycoelectronics.com

Dimensions are in inches and millimeters unless otherwise specified. Values in brackets are metric equivalents.

Dimensions are shown for reference purposes only. Specifications subject to change.

USA: 1-800-522-6752
Canada: 1-905-470-4425
Mexico: 01-800-733-8926
C. America: 52-55-1106-0803
South America: 55-11-2103-6000
Hong Kong: 852-2735-1628
Japan: 81-44-844-8013
UK: 44-8706-080-208

Non-Compliant to RoHS Compliant Part Number Cross Reference (Continued)

Non-Compliant Part Number	RoHS Compliant Part Number
794622-8	3-794622-8
1-794622-0	4-794622-0
1-794622-2	4-794622-2
1-794622-4	4-794622-4
1-794622-6	4-794622-6
1-794622-8	4-794622-8
2-794622-0	5-794622-0
2-794622-2	5-794622-2
2-794622-4	5-794622-4
794623-2	3-794623-2
794623-4	3-794623-4
794623-6	3-794623-6
794623-8	3-794623-8
1-794623-0	4-794623-0
1-794623-2	4-794623-2
1-794623-4	4-794623-4
1-794623-6	4-794623-6
1-794623-8	4-794623-8
2-794623-0	5-794623-0
2-794623-2	5-794623-2
2-794623-4	5-794623-4
794624-2	3-794624-2
794624-4	3-794624-4
794624-6	3-794624-6
794624-8	3-794624-8
1-794624-0	4-794624-0
1-794624-2	4-794624-2
1-794624-4	4-794624-4
1-794624-6	4-794624-6
1-794624-8	4-794624-8
2-794624-0	5-794624-0
2-794624-2	5-794624-2
2-794624-4	5-794624-4
794625-2	3-794625-2
794625-4	3-794625-4
794625-6	3-794625-6
794625-8	3-794625-8
1-794625-0	4-794625-0
1-794625-2	4-794625-2
1-794625-4	4-794625-4
1-794625-6	4-794625-6
1-794625-8	4-794625-8
2-794625-0	5-794625-0
2-794625-2	5-794625-2
2-794625-4	5-794625-4
794626-2	3-794626-2
794626-4	3-794626-4
794626-6	3-794626-6
794626-8	3-794626-8
1-794626-0	4-794626-0
1-794626-2	4-794626-2
1-794626-4	4-794626-4
1-794626-6	4-794626-6
1-794626-8	4-794626-8
2-794626-0	5-794626-0
2-794626-2	5-794626-2
2-794626-4	5-794626-4
794627-2	3-794627-2
794627-4	3-794627-4
794627-6	3-794627-6
794627-8	3-794627-8

Non-Compliant Part Number	RoHS Compliant Part Number
1-794627-0	4-794627-0
1-794627-2	4-794627-2
1-794627-4	4-794627-4
1-794627-6	4-794627-6
1-794627-8	4-794627-8
2-794627-0	5-794627-0
2-794627-2	5-794627-2
2-794627-4	5-794627-4
794628-2	3-794628-2
794628-4	3-794628-4
794628-6	3-794628-6
794628-8	3-794628-8
1-794628-0	4-794628-0
1-794628-2	4-794628-2
1-794628-4	4-794628-4
1-794628-6	4-794628-6
1-794628-8	4-794628-8
2-794628-0	5-794628-0
2-794628-2	5-794628-2
2-794628-4	5-794628-4
794629-2	3-794629-2
794629-4	3-794629-4
794629-6	3-794629-6
794629-8	3-794629-8
1-794629-0	4-794629-0
1-794629-2	4-794629-2
1-794629-4	4-794629-4
1-794629-6	4-794629-6
1-794629-8	4-794629-8
2-794629-0	5-794629-0
2-794629-2	5-794629-2
2-794629-4	5-794629-4
794630-2	3-794630-2
794630-4	3-794630-4
794630-6	3-794630-6
794630-8	3-794630-8
1-794630-0	4-794630-0
1-794630-2	4-794630-2
1-794630-4	4-794630-4
1-794630-6	4-794630-6
1-794630-8	4-794630-8
2-794630-0	5-794630-0
2-794630-2	5-794630-2
2-794630-4	5-794630-4
794631-2	3-794631-2
794631-4	3-794631-4
794631-6	3-794631-6
794631-8	3-794631-8
1-794631-0	4-794631-0
1-794631-2	4-794631-2
1-794631-4	4-794631-4
1-794631-6	4-794631-6
1-794631-8	4-794631-8
2-794631-0	5-794631-0
2-794631-2	5-794631-2
2-794631-4	5-794631-4
794632-2	3-794632-2
794632-4	3-794632-4
794632-6	3-794632-6
794632-8	3-794632-8
1-794632-0	4-794632-0

Non-Compliant Part Number	RoHS Compliant Part Number
1-794632-2	4-794632-2
1-794632-4	4-794632-4
1-794632-6	4-794632-6
1-794632-8	4-794632-8
2-794632-0	5-794632-0
2-794632-2	5-794632-2
2-794632-4	5-794632-4
794633-2	3-794633-2
794633-4	3-794633-4
794633-6	3-794633-6
794633-8	3-794633-8
1-794633-0	4-794633-0
1-794633-2	4-794633-2
1-794633-4	4-794633-4
1-794633-6	4-794633-6
1-794633-8	4-794633-8
2-794633-0	5-794633-0
2-794633-2	5-794633-2
2-794633-4	5-794633-4
794634-2	3-794634-2
794634-4	3-794634-4
794634-6	3-794634-6
794634-8	3-794634-8
1-794634-0	4-794634-0
1-794634-2	4-794634-2
1-794634-4	4-794634-4
1-794634-6	4-794634-6
1-794634-8	4-794634-8
2-794634-0	5-794634-0
2-794634-2	5-794634-2
2-794634-4	5-794634-4
794635-2	3-794635-2
794635-4	3-794635-4
794635-6	3-794635-6
794635-8	3-794635-8
1-794635-0	4-794635-0
1-794635-2	4-794635-2
1-794635-4	4-794635-4
1-794635-6	4-794635-6
1-794635-8	4-794635-8
2-794635-0	5-794635-0
2-794635-2	5-794635-2
2-794635-4	5-794635-4
794636-2	3-794636-2
794636-4	3-794636-4
794636-6	3-794636-6
794636-8	3-794636-8
1-794636-0	4-794636-0
1-794636-2	4-794636-2
1-794636-4	4-794636-4
1-794636-6	4-794636-6
1-794636-8	4-794636-8
2-794636-0	5-794636-0
2-794636-2	5-794636-2
2-794636-4	5-794636-4
794637-2	3-794637-2
794637-4	3-794637-4
794637-6	3-794637-6
794637-8	3-794637-8
1-794637-0	4-794637-0
1-794637-2	4-794637-2

Non-Compliant Part Number	RoHS Compliant Part Number
1-794637-4	4-794637-4
1-794637-6	4-794637-6
1-794637-8	4-794637-8
2-794637-0	5-794637-0
2-794637-2	5-794637-2
2-794637-4	5-794637-4
794638-2	3-794638-2
794638-4	3-794638-4
794638-6	3-794638-6
794638-8	3-794638-8
1-794638-0	4-794638-0
1-794638-2	4-794638-2
1-794638-4	4-794638-4
1-794638-6	4-794638-6
1-794638-8	4-794638-8
2-794638-0	5-794638-0
2-794638-2	5-794638-2
2-794638-4	5-794638-4
794662-2	1586489-2
794662-4	1586489-4
794662-6	1586489-6
794662-8	1586489-8
1-794662-0	1-1586489-0
1-794662-2	1-1586489-2
1-794662-4	1-1586489-4
1-794662-6	1-1586489-6
1-794662-8	1-1586489-8
2-794662-0	2-1586489-0
2-794662-2	2-1586489-2
2-794662-4	2-1586489-4
794663-2	1586490-2
794663-4	1586490-4
794663-6	1586490-6
794663-8	1586490-8
1-794663-0	1-1586490-0
1-794663-2	1-1586490-2
1-794663-4	1-1586490-4
1-794663-6	1-1586490-6
1-794663-8	1-1586490-8
2-794663-0	2-1586490-0
2-794663-2	2-1586490-2
2-794663-4	2-1586490-4
794664-2	1586491-2
794664-4	1586491-4
794664-6	1586491-6
794664-8	1586491-8
1-794664-0	1-1586491-0
1-794664-2	1-1586491-2
1-794664-4	1-1586491-4
1-794664-6	1-1586491-6
1-794664-8	1-1586491-8
2-794664-0	2-1586491-0
2-794664-2	2-1586491-2
2-794664-4	2-1586491-4
794665-2	1586492-2
794665-4	1586492-4
794665-6	1586492-6
794665-8	1586492-8
1-794665-0	1-1586492-0
1-794665-2	1-1586492-2
1-794665-4	1-1586492-4

Catalog 82181
Revised 4-08
www.tycoelectronics.com

Dimensions are in inches and millimeters unless otherwise specified. Values in brackets are metric equivalents.

Dimensions are shown for reference purposes only. Specifications subject to change.

USA: 1-800-522-6752
Canada: 1-905-470-4425
Mexico: 01-800-733-8926
C. America: 52-55-1106-0803
South America: 55-11-2103-6000
Hong Kong: 852-2735-1628
Japan: 81-44-844-8013
UK: 44-8706-080-208

Non-Compliant to RoHS Compliant Part Number Cross Reference (Continued)

Non-Compliant Part Number	RoHS Compliant Part Number
1-794665-8	1-1586492-8
2-794665-0	2-1586492-0
2-794665-2	2-1586492-2
2-794665-4	2-1586492-4
794666-2	1586493-2
794666-4	1586493-4
794666-6	1586493-6
794666-8	1586493-8
1-794666-0	1-1586493-0
1-794666-2	1-1586493-2
1-794666-4	1-1586493-4
1-794666-6	1-1586493-6
1-794666-8	1-1586493-8
2-794666-0	2-1586493-0
2-794666-2	2-1586493-2
2-794666-4	2-1586493-4
794667-2	1586494-2
794667-4	1586494-4
794667-6	1586494-6
794667-8	1586494-8
1-794667-0	1-1586494-0
1-794667-2	1-1586494-2
1-794667-4	1-1586494-4
1-794667-6	1-1586494-6
1-794667-8	1-1586494-8
2-794667-0	2-1586494-0
2-794667-2	2-1586494-2
2-794667-4	2-1586494-4
794668-2	1586495-2
794668-4	1586495-4
794668-6	1586495-6
794668-8	1586495-8
1-794668-0	1-1586495-0
1-794668-2	1-1586495-2
1-794668-4	1-1586495-4
1-794668-6	1-1586495-6
1-794668-8	1-1586495-8
2-794668-0	2-1586495-0
2-794668-2	2-1586495-2
2-794668-4	2-1586495-4
794669-2	1586496-2
794669-4	1586496-4
794669-6	1586496-6
794669-8	1586496-8
1-794669-0	1-1586496-0
1-794669-2	1-1586496-2
1-794669-4	1-1586496-4
1-794669-6	1-1586496-6
1-794669-8	1-1586496-8
2-794669-0	2-1586496-0
2-794669-2	2-1586496-2
2-794669-4	2-1586496-4
794677-2	3-794677-2
794677-4	3-794677-4
794677-6	3-794677-6
794677-8	3-794677-8
1-794677-0	4-794677-0
1-794677-2	4-794677-2
1-794677-4	4-794677-4
1-794677-6	4-794677-6
1-794677-8	4-794677-8

Non-Compliant Part Number	RoHS Compliant Part Number
2-794677-0	5-794677-0
2-794677-2	5-794677-2
2-794677-4	5-794677-4
794678-2	3-794678-2
794678-4	3-794678-4
794678-6	3-794678-6
794678-8	3-794678-8
1-794678-0	4-794678-0
1-794678-2	4-794678-2
1-794678-4	4-794678-4
1-794678-6	4-794678-6
1-794678-8	4-794678-8
2-794678-0	5-794678-0
2-794678-2	5-794678-2
2-794678-4	5-794678-4
794679-2	3-794679-2
794679-4	3-794679-4
794679-6	3-794679-6
794679-8	3-794679-8
1-794679-0	4-794679-0
1-794679-2	4-794679-2
1-794679-4	4-794679-4
1-794679-6	4-794679-6
1-794679-8	4-794679-8
2-794679-0	5-794679-0
2-794679-2	5-794679-2
2-794679-4	5-794679-4
794680-2	3-794680-2
794680-4	3-794680-4
794680-6	3-794680-6
794680-8	3-794680-8
1-794680-0	4-794680-0
1-794680-2	4-794680-2
1-794680-4	4-794680-4
1-794680-6	4-794680-6
1-794680-8	4-794680-8
2-794680-0	5-794680-0
2-794680-2	5-794680-2
2-794680-4	5-794680-4
794681-2	3-794681-2
794681-4	3-794681-4
794681-6	3-794681-6
794681-8	3-794681-8
1-794681-0	4-794681-0
1-794681-2	4-794681-2
1-794681-4	4-794681-4
1-794681-6	4-794681-6
1-794681-8	4-794681-8
2-794681-0	5-794681-0
2-794681-2	5-794681-2
2-794681-4	5-794681-4
794682-2	3-794682-2
794682-4	3-794682-4
794682-6	3-794682-6
794682-8	3-794682-8
1-794682-0	4-794682-0
1-794682-2	4-794682-2
1-794682-4	4-794682-4
1-794682-6	4-794682-6
1-794682-8	4-794682-8
2-794682-0	5-794682-0

Non-Compliant Part Number	RoHS Compliant Part Number
2-794682-2	5-794682-2
2-794682-4	5-794682-4
794704-1	1586542-1
1445050-2	2-1445050-2
1445050-3	2-1445050-3
1445050-4	2-1445050-4
1445050-5	2-1445050-5
1445050-6	2-1445050-6
1445050-7	2-1445050-7
1445050-8	2-1445050-8
1445050-9	2-1445050-9
1-1445050-0	3-1445050-0
1-1445050-1	3-1445050-1
1-1445050-2	3-1445050-2
1445051-2	2-1445051-2
1445051-3	2-1445051-3
1445051-4	2-1445051-4
1445051-5	2-1445051-5
1445051-6	2-1445051-6
1445051-7	2-1445051-7
1445051-8	2-1445051-8
1445051-9	2-1445051-9
1-1445051-0	3-1445051-0
1-1445051-1	3-1445051-1
1-1445051-2	3-1445051-2
1445052-2	2-1445052-2
1445052-3	2-1445052-3
1445052-4	2-1445052-4
1445052-5	2-1445052-5
1445052-6	2-1445052-6
1445052-7	2-1445052-7
1445052-8	2-1445052-8
1445052-9	2-1445052-9
1-1445052-0	3-1445052-0
1-1445052-1	3-1445052-1
1-1445052-2	3-1445052-2
1445053-2	2-1445053-2
1445053-3	2-1445053-3
1445053-4	2-1445053-4
1445053-5	2-1445053-5
1445053-6	2-1445053-6
1445053-7	2-1445053-7
1445053-8	2-1445053-8
1445053-9	2-1445053-9
1-1445053-0	3-1445053-0
1-1445053-1	3-1445053-1
1-1445053-2	3-1445053-2
1445054-2	2-1445054-2
1445054-3	2-1445054-3
1445054-4	2-1445054-4
1445054-5	2-1445054-5
1445054-6	2-1445054-6
1445054-7	2-1445054-7
1445054-8	2-1445054-8
1445054-9	2-1445054-9
1-1445054-0	3-1445054-0
1-1445054-1	3-1445054-1
1-1445054-2	3-1445054-2
1445055-2	2-1445055-2
1445055-3	2-1445055-3
1445055-4	2-1445055-4

Non-Compliant Part Number	RoHS Compliant Part Number
1445055-5	2-1445055-5
1445055-6	2-1445055-6
1445055-7	2-1445055-7
1445055-8	2-1445055-8
1445055-9	2-1445055-9
1-1445055-0	3-1445055-0
1-1445055-1	3-1445055-1
1-1445055-2	3-1445055-2
1445056-2	2-1445056-2
1445056-3	2-1445056-3
1445056-4	2-1445056-4
1445056-5	2-1445056-5
1445056-6	2-1445056-6
1445056-7	2-1445056-7
1445056-8	2-1445056-8
1445056-9	2-1445056-9
1-1445056-0	3-1445056-0
1-1445056-1	3-1445056-1
1-1445056-2	3-1445056-2
1445057-2	2-1445057-2
1445057-3	2-1445057-3
1445057-4	2-1445057-4
1445057-5	2-1445057-5
1445057-6	2-1445057-6
1445057-7	2-1445057-7
1445057-8	2-1445057-8
1445057-9	2-1445057-9
1-1445057-0	3-1445057-0
1-1445057-1	3-1445057-1
1-1445057-2	3-1445057-2
1445058-2	2-1445058-2
1445058-3	2-1445058-3
1445058-4	2-1445058-4
1445058-5	2-1445058-5
1445058-6	2-1445058-6
1445058-7	2-1445058-7
1445058-8	2-1445058-8
1445058-9	2-1445058-9
1-1445058-0	3-1445058-0
1-1445058-1	3-1445058-1
1-1445058-2	3-1445058-2
1445084-2	2-1445084-2
1445084-3	2-1445084-3
1445084-4	2-1445084-4
1445084-5	2-1445084-5
1445084-6	2-1445084-6
1445084-7	2-1445084-7
1445084-8	2-1445084-8
1445084-9	2-1445084-9
1-1445084-0	3-1445084-0
1-1445084-1	3-1445084-1
1-1445084-2	3-1445084-2
1445085-2	2-1445085-2
1445085-3	2-1445085-3
1445085-4	2-1445085-4
1445085-5	2-1445085-5
1445085-6	2-1445085-6
1445085-7	2-1445085-7
1445085-8	2-1445085-8
1445085-9	2-1445085-9
1-1445085-0	3-1445085-0

Dimensions are in inches and millimeters unless otherwise specified. Values in brackets are metric equivalents.

Dimensions are shown for reference purposes only. Specifications subject to change.

USA: 1-800-522-6752
Canada: 1-905-470-4425
Mexico: 01-800-733-8926
C. America: 52-55-1106-0803
South America: 55-11-2103-6000
Hong Kong: 852-2735-1628
Japan: 81-44-844-8013
UK: 44-8706-080-208

Non-Compliant to RoHS Compliant Part Number Cross Reference (Continued)

Non-Compliant Part Number	RoHS Compliant Part Number
1-1445085-1	3-1445085-1
1-1445085-2	3-1445085-2
1445086-2	2-1445086-2
1445086-3	2-1445086-3
1445086-4	2-1445086-4
1445086-5	2-1445086-5
1445086-6	2-1445086-6
1445086-7	2-1445086-7
1445086-8	2-1445086-8
1445086-9	2-1445086-9
1-1445086-0	3-1445086-0
1-1445086-1	3-1445086-1
1-1445086-2	3-1445086-2
1445087-2	2-1445087-2
1445087-3	2-1445087-3
1445087-4	2-1445087-4
1445087-5	2-1445087-5
1445087-6	2-1445087-6
1445087-7	2-1445087-7
1445087-8	2-1445087-8
1445087-9	2-1445087-9
1-1445087-0	3-1445087-0
1-1445087-1	3-1445087-1
1-1445087-2	3-1445087-2
1445088-2	2-1445088-2
1445088-3	2-1445088-3
1445088-4	2-1445088-4
1445088-5	2-1445088-5
1445088-6	2-1445088-6
1445088-7	2-1445088-7
1445088-8	2-1445088-8
1445088-9	2-1445088-9
1-1445088-0	3-1445088-0
1-1445088-1	3-1445088-1
1-1445088-2	3-1445088-2
1445089-2	2-1445089-2
1445089-3	2-1445089-3
1445089-4	2-1445089-4
1445089-5	2-1445089-5
1445089-6	2-1445089-6
1445089-7	2-1445089-7
1445089-8	2-1445089-8
1445089-9	2-1445089-9
1-1445089-0	3-1445089-0
1-1445089-1	3-1445089-1

Non-Compliant Part Number	RoHS Compliant Part Number
1-1445089-2	3-1445089-2
1445090-2	2-1445090-2
1445090-3	2-1445090-3
1445090-4	2-1445090-4
1445090-5	2-1445090-5
1445090-6	2-1445090-6
1445090-7	2-1445090-7
1445090-8	2-1445090-8
1445090-9	2-1445090-9
1-1445090-0	3-1445090-0
1-1445090-1	3-1445090-1
1-1445090-2	3-1445090-2
1445091-2	2-1445091-2
1445091-3	2-1445091-3
1445091-4	2-1445091-4
1445091-5	2-1445091-5
1445091-6	2-1445091-6
1445091-7	2-1445091-7
1445091-8	2-1445091-8
1445091-9	2-1445091-9
1-1445091-0	3-1445091-0
1-1445091-1	3-1445091-1
1-1445091-2	3-1445091-2
1445092-2	2-1445092-2
1445092-3	2-1445092-3
1445092-4	2-1445092-4
1445092-5	2-1445092-5
1445092-6	2-1445092-6
1445092-7	2-1445092-7
1445092-8	2-1445092-8
1445092-9	2-1445092-9
1-1445092-0	3-1445092-0
1-1445092-1	3-1445092-1
1-1445092-2	3-1445092-2
1445093-2	2-1445093-2
1445093-3	2-1445093-3
1445093-4	2-1445093-4
1445093-5	2-1445093-5
1445093-6	2-1445093-6
1445093-7	2-1445093-7
1445093-8	2-1445093-8
1445093-9	2-1445093-9
1-1445093-0	3-1445093-0
1-1445093-1	3-1445093-1
1-1445093-2	3-1445093-2

Non-Compliant Part Number	RoHS Compliant Part Number
1445094-2	2-1445094-2
1445094-3	2-1445094-3
1445094-4	2-1445094-4
1445094-5	2-1445094-5
1445094-6	2-1445094-6
1445094-7	2-1445094-7
1445094-8	2-1445094-8
1445094-9	2-1445094-9
1-1445094-0	3-1445094-0
1-1445094-1	3-1445094-1
1-1445094-2	3-1445094-2
1445095-2	2-1445095-2
1445095-3	2-1445095-3
1445095-4	2-1445095-4
1445095-5	2-1445095-5
1445095-6	2-1445095-6
1445095-7	2-1445095-7
1445095-8	2-1445095-8
1445095-9	2-1445095-9
1-1445095-0	3-1445095-0
1-1445095-1	3-1445095-1
1-1445095-2	3-1445095-2
1445096-2	2-1445096-2
1445096-3	2-1445096-3
1445096-4	2-1445096-4
1445096-5	2-1445096-5
1445096-6	2-1445096-6
1445096-7	2-1445096-7
1445096-8	2-1445096-8
1445096-9	2-1445096-9
1-1445096-0	3-1445096-0
1-1445096-1	3-1445096-1
1-1445096-2	3-1445096-2
1445097-2	2-1445097-2
1445097-3	2-1445097-3
1445097-4	2-1445097-4
1445097-5	2-1445097-5
1445097-6	2-1445097-6
1445097-7	2-1445097-7
1445097-8	2-1445097-8
1445097-9	2-1445097-9
1-1445097-0	3-1445097-0
1-1445097-1	3-1445097-1
1-1445097-2	3-1445097-2
1445098-2	2-1445098-2

Non-Compliant Part Number	RoHS Compliant Part Number
1445098-3	2-1445098-3
1445098-4	2-1445098-4
1445098-5	2-1445098-5
1445098-6	2-1445098-6
1445098-7	2-1445098-7
1445098-8	2-1445098-8
1445098-9	2-1445098-9
1-1445098-0	3-1445098-0
1-1445098-1	3-1445098-1
1-1445098-2	3-1445098-2
1445099-2	2-1445099-2
1445099-3	2-1445099-3
1445099-4	2-1445099-4
1445099-5	2-1445099-5
1445099-6	2-1445099-6
1445099-7	2-1445099-7
1445099-8	2-1445099-8
1445099-9	2-1445099-9
1-1445099-0	3-1445099-0
1-1445099-1	3-1445099-1
1-1445099-2	3-1445099-2
1445100-2	2-1445100-2
1445100-3	2-1445100-3
1445100-4	2-1445100-4
1445100-5	2-1445100-5
1445100-6	2-1445100-6
1445100-7	2-1445100-7
1445100-8	2-1445100-8
1445100-9	2-1445100-9
1-1445100-0	3-1445100-0
1-1445100-1	3-1445100-1
1-1445100-2	3-1445100-2
1445101-2	2-1445101-2
1445101-3	2-1445101-3
1445101-4	2-1445101-4
1445101-5	2-1445101-5
1445101-6	2-1445101-6
1445101-7	2-1445101-7
1445101-8	2-1445101-8
1445101-9	2-1445101-9
1-1445101-0	3-1445101-0
1-1445101-1	3-1445101-1
1-1445101-2	3-1445101-2

Catalog 82181
Revised 4-08

www.tycoelectronics.com

Dimensions are in inches and millimeters unless otherwise specified. Values in brackets are metric equivalents.

Dimensions are shown for reference purposes only. Specifications subject to change.

USA: 1-800-522-6752
Canada: 1-905-470-4425
Mexico: 01-800-733-8926
C. America: 52-55-1106-0803

South America: 55-11-2103-6000
Hong Kong: 852-2735-1628
Japan: 81-44-844-8013
UK: 44-8706-080-208

Part Number Index

Note: This index lists all cataloged parts by base no. only. Complete part nos. (with prefixes and/or suffixes) are shown on the page(s) indicated.

Part No.	Page
60617	155
60618	155
60619	155
60620	155
60842	155
60843	155
61085	203, 213
61086	203, 213
61116	155, 214
61117	155, 214
61118	155, 214
61173	155
61174	155
61233	203, 213
61234	203, 213
61250	213
61251	213
61252	213
61253	213
61314	155, 212
61320	156
61518	156
61527	156, 212
61626	166, 212
61627	166, 212
106527	126
106528	126, 212
106529	126, 212
171636	213
171637	213
171638	86
171639	86
172156	85, 87
172157	85, 87
172158	85, 87
172159	85, 87
172160	85, 87
172161	85, 88
172162	85, 88
172163	85, 88
172164	85, 87, 92
172165	85, 87, 90, 92, 103, 105
172166	85, 87, 90, 92, 103, 105
172167	85, 87, 90-92, 103-105
172168	85, 87, 90-92, 103-105
172169	85, 88, 90-92, 103-105
172170	85, 88, 90-92, 103-105
172171	85, 88, 90-92, 103-105
172233	85, 87
172234	85, 87
172327	85, 87
172328	85, 87
172329	85, 87
172330	85, 87
172331	85, 87
172332	85, 88
172333	85, 88

Part No.	Page
172334	85, 88
172335	85, 87
172336	85, 87
172337	85, 87
172338	85, 87
172339	85, 87
172340	85, 88
172341	85, 88
172342	85, 88
172343	85, 87
172344	85, 87
172807	85, 89
172808	85, 89
172809	85, 89
172971	86
173924	184, 199
173925	184, 199
173926	184, 199
173956	85
173957	85, 89
173958	85
174552	154, 164
174670	86
177898	60, 62, 71
177899	60, 62, 71
177900	60, 63, 71
177901	60, 63, 71
177902	60, 63, 71
177903	60, 64, 71
177904	60, 64, 71
177905	60, 64, 71
177906	60, 67, 71
177907	60, 67, 71
177908	60, 68, 71
177909	60, 68, 71
177911	60, 69, 71
177912	60, 69, 71
177913	60, 70-71
177914	61, 211
177915	61, 211
177916	61, 211
177917	61, 211
177918	60, 71
177919	60, 71
177920	60, 71
177921	60, 71
179463	60, 65, 71
179464	60, 65, 71
179465	60, 66, 71
179466	60, 66, 71
179467	60, 66, 71
179592	61
179593	61
179594	61
179595	61
179838	61, 72
179839	61, 72
179840	61, 73
179841	61, 73
179843	61, 74
179844	61, 74
179846	61, 79

Part No.	Page
179847	61, 79
179848	61, 80
179849	61, 80
179861	61, 75, 77
179862	61, 76-77
179938	61, 75, 77
179939	61, 75, 77
179944	61
179945	61
193796	201
193797	201
193839	201
193841	201
193842	201
194002	202
194009	202
194010	202
194012	202
194013	202
194014	202
194017	202
194018	202
200821	156
306088	14
316061	60, 78
316062	60, 78
316063	60, 78
316086	10, 12, 14
316087	10, 12, 14
316088	10, 12, 14
316089	10, 12, 14
316090	10, 12, 14
316091	10, 12, 14
316092	10, 12, 14
316094	10, 12, 14
316221	16
316222	16
316223	16
316224	16
316225	16
316226	16
316227	16
316299	72
316398	12
316399	12
316400	12
316401	12
316454	94
316455	94
316501	60, 62, 71
316502	60, 67, 71
316768	60, 62, 71
316769	60, 65, 71
316770	60, 71
350020	116
350021	116
350022	116
350073	156
350074	156
350078	155, 212
350079	155, 212
350200	166, 212

Part No.	Page
350201	166, 212
350209	153, 161
350210	153, 161
350211	154, 161, 163
350212	153, 161
350213	153, 161
350214	153, 161
350218	172, 181, 213
350219	153, 161
350220	153, 161
350344	167
350345	167
350346	167
350347	167
350373	116
350374	116
350375	116
350376	116
350377	116
350378	116
350379	116
350380	116
350388	166
350389	166
350390	166
350391	166
350415	145, 212
350416	145, 212
350417	145, 212
350418	145, 212
350422	153, 161
350423	153, 161
350424	154, 161, 163
350425	153, 161
350426	153, 161
350427	153, 161
350428	171, 182
350429	171, 182
350430	171, 182
350431	171, 182
350432	171, 182
350433	171, 182
350434	171, 182
350444	155
350522	116
350523	116
350524	116
350536	172, 181, 213
350537	172, 213
350538	172, 213
350539	153, 158, 161
350540	153, 158, 161
350541	153, 158, 161
350542	153, 161
350543	154, 158, 161
350544	154, 158, 161
350547	172, 181
350550	172, 181
350551	172
350552	172
350557	155, 212
350558	155, 212

Part Number Index (Continued)

Part No.	Page
350561	172, 212
350570	172, 212
350576	153, 162
350577	153, 162
350578	153, 162
350579	153, 162
350582	171, 182
350583	171, 182
350584	171, 182
350585	171, 182
350586	171, 182
350587	171, 182
350588	171, 182
350589	175
350590	173
350591	112
350628	55, 211
350629	55, 211
350638	155
350639	155
350641	153, 162
350642	153, 162
350643	153, 162
350644	153, 162
350654	173, 181, 213
350669	173, 181
350687	173, 181, 213
350689	172
350690	172
350699	173, 213
350700	173, 213
350705	173, 181
350706	173
350707	173
350711	171, 182, 191, 197
350712	171, 182, 191, 197
350713	171, 182, 191, 197
350714	171, 182, 191, 197
350715	171, 174, 182-183, 197-198
350720	171, 174, 182-183, 197-198
350732	171, 182, 191, 197
350735	171, 174, 182-183, 197-198
350736	171, 174, 182-183, 197-198
350737	171, 182, 191, 197
350738	171, 182, 191, 197
350742	171, 182, 191, 197
350759	171, 183
350760	171, 183
350761	171, 183
350762	171, 183
350763	171, 183
350764	171, 183
350765	171, 183
350766	171, 174, 182-185, 197-200
350767	171, 174
350777	171, 174, 182-185, 197-200
350778	171, 174
350779	171, 174, 182-185, 197-200
350780	171, 174
350781	171, 174
350782	171, 174
350783	171, 174
350784	171, 174
350786	171, 182, 191, 197
350787	171, 182, 191, 197
350789	171, 182, 191, 197
350790	171, 182, 191, 197
350792	171, 182, 191, 197
350793	171, 182, 191, 197
350809	171, 174, 182-183, 185, 197-198
350810	171, 174, 193
350811	173
350812	173
350824	171, 183, 191, 198
350825	171, 183, 191, 198
350826	171, 183, 191, 198
350827	171, 183, 191, 198
350828	171, 183, 191, 198
350829	171, 183, 191, 198
350830	171, 183, 191, 198
350831	171, 183, 191, 198
350832	171, 183, 191, 198
350833	171, 183, 191, 198
350834	171, 183, 191, 198
350835	171, 183, 191, 198
350836	171, 183, 191, 198
350837	171, 183, 191, 198
350838	112
350848	185
350849	185
350851	172, 212
350865	171, 174
350866	171, 174
350867	171, 174
350871	173
350873	172, 213
350874	172, 213
350877	173
350918	172
350919	172
350922	172, 213
350923	172, 213
350924	172, 212
350925	172, 212
350942	171, 183, 191, 200
350943	171, 183, 191, 200
350944	171, 183, 191, 200
350945	171, 183, 191, 200
350948	171, 185
350949	171, 185
350967	106, 205
350968	106, 205
350969	106, 205
350986	171, 183
350987	171, 183
350988	171, 183
350989	171, 183
350990	171, 183
350991	171, 183
350992	171, 183
353891	60, 78
380935	116
380936	116
380937	116
380991	153, 161
380999	153, 161
480270	153, 158, 160-161
480271	153, 160
480273	153, 159
480274	153, 159
480275	153, 159
480276	153, 159, 162
480277	153, 159, 162
480278	153, 159, 162
480283	153, 158, 160-161
480284	153, 160
480285	153, 158, 160-161
480286	153, 160
480287	153, 160-161
480288	153, 160
480303	153, 157, 161, 163
480304	153, 159
480305	153, 157, 159
480318	153, 157, 161, 163
480319	153, 157
480323	153, 159
480324	153, 159, 162
480339	153, 158
480340	153, 158
480345	153, 158
480349	153, 157
480350	153, 157
480351	153, 157
480387	153, 157
480388	153, 157
480393	153, 157
480400	153, 157
480401	153, 157
480424	154, 157, 165, 163-164
480425	154, 159
480426	154, 157, 165, 162-163
480438	153, 160-161
480439	153, 160
480498	153, 157
480510	166
480512	166
480585	166
480586	166
480594	116
480634	116
480672	167
480673	167
480698	171, 174, 182-184
480699	171, 174
480700	171, 174, 182-184
480701	171, 174
480702	171, 174, 182-185
480703	171, 174
480704	171, 174, 182-183
480705	171, 174
480706	171, 174, 182-183
480707	171, 174
480708	171, 174, 182-183
480709	171, 174
480710	171, 174, 182-183
480711	171, 174
480720	153,158,161
480721	153,158,161
480722	158, 161
480763	171, 174, 182-183, 185
480764	171, 174
480772	154
640309	172
640310	172
640347	172
640391	55, 211
640392	55, 211
640415	173
640466	171, 182
640467	171, 183
640497	105, 112
640498	105, 112
640499	105, 112
640500	105, 112
640501	105, 112
640502	105, 112
640503	105, 112
640504	105, 112
640505	105, 112
640506	105, 112
640507	105, 107
640508	105, 107
640509	105, 107
640510	105, 107
640511	105, 108
640512	105, 108
640513	105, 108
640514	105, 108
640515	105, 108
640516	105, 108
640517	105, 107, 112
640518	105, 107, 112
640519	105, 107, 112
640520	105, 107, 112
640521	105, 108, 112
640522	105, 108, 112
640523	105, 108, 112
640524	105, 108, 112
640525	105, 108, 112
640526	105, 108, 112
640545	112
640579	112
640580	112
640581	171, 174, 182-183, 185
640582	171, 174, 182, 185
640583	171, 185
640584	171, 185
640585	171, 174, 182, 185
640586	171, 174, 182, 185
640587	171, 185
640713	180, 196

Catalog 82181
Revised 4-08

www.tycoelectronics.com

Dimensions are in inches and millimeters unless otherwise specified. Values in brackets are metric equivalents.

Dimensions are shown for reference purposes only. Specifications subject to change.

USA: 1-800-522-6752
Canada: 1-905-470-4425
Mexico: 01-800-733-8926
C. America: 52-55-1106-0803

South America: 55-11-2103-6000
Hong Kong: 852-2735-1628
Japan: 81-44-844-8013
UK: 44-8706-080-208

Part Number Index (Continued)

Part No.	Page
640714	180, 196
640715	180, 196
640716	180, 196
640717	180, 196
640718	180, 196
640719	176
640720	176
640721	176
640722	176
640723	176
640724	176
640900	171, 182, 191, 197
640901	171, 183, 191, 198
641083	171
641294	106, 205
641300	112
641737	154, 163
641763	176
641775	176
641776	180, 196
641777	176
641778	176
641825	171, 182
641828	171, 182
641831	171, 182
641832	171, 182
641945	180, 196
641963	171, 182
641964	171, 182, 191, 197
641965	171, 182
641966	171, 182, 191, 197
641967	171, 182
641968	171, 182, 191, 197
641969	171, 182
641970	171, 182, 191, 197
641971	171, 182
641972	171, 182, 191, 197
641973	171, 182
641974	171, 182, 191, 197
641975	171, 182
641976	171, 182, 191, 197
643030	180, 196
643182	176
643226	171, 183, 191, 200
643228	171, 183, 191, 200
643230	171, 183, 191, 200
643232	171, 183, 191, 200
643234	171, 185
643235	185
643236	171, 185
643237	185
643313	176
643314	176
643405	171, 182
643406	171, 182, 191, 197
643407	171, 182
643408	171, 182
643410	171, 182
643411	171, 183
643412	171, 183, 191, 198
643413	171, 183
643414	171, 183, 191, 198

Part No.	Page
643415	171, 183
643416	171, 183, 191, 198
643423	171, 183
643424	171, 183, 191, 198
643425	171, 183
643426	171, 183, 191, 198
643428	171, 183, 191, 198
643429	171, 183
643430	171, 183, 191, 198
643488	153, 163
643585	176
643749	182
770003	192, 213
770004	192, 213
770005	192, 213
770006	192, 213
770007	192, 213
770008	192, 213
770009	192, 213
770010	192, 213
770011	192, 213
770012	192, 213
770016	194-195, 185, 191, 193, 195, 197-198
770017	194-195, 191, 193, 195, 197-201
770018	194-195, 191, 193, 195, 197-201
770019	194-195, 191, 193, 195, 197-1201
770020	194-195, 191, 194-195, 197-198, 201
770021	194-195, 191, 194-195, 197-198, 201
770022	194-195, 191, 194-195, 197-198, 201
770023	194-195, 191, 194-195, 197-198, 201
770024	191, 193, 195, 201
770025	191, 193, 195, 201
770026	191, 193, 195, 201
770027	191, 194-195, 201
770028	191, 194-195, 201
770029	191, 194-195, 201
770030	191, 194-195, 201
770031	195
770032	195
770033	195
770034	195
770035	195
770036	195
770037	195
770038	195
770039	195
770040	195
770041	195
770042	195
770043	195
770044	195
770045	195
770046	195
770047	195
770048	195
770049	195

Part No.	Page
770050	195
770051	195
770052	195
770053	195
770054	195
770055	195
770056	195
770057	195
770058	195
770063	146
770064	146
770065	146
770066	146
770068	146
770069	146
770070	146
770071	146
770073	146
770074	146
770075	146
770076	146
770077	146
770078	146
770083	146
770084	146
770085	146
770086	146
770087	146
770088	146
770089	146
770090	146
770091	146
770092	146
770093	146
770094	146
770095	146
770096	146
770097	146
770098	146
770099	146
770100	146
770101	146
770102	146
770103	146
770105	146
770106	146
770107	146
770108	146
770143	171, 182
770144	145
770145	145
770146	145
770147	145
770156	154, 163
770166	85, 90, 103, 107
770170	85, 90, 103, 107
770174	85, 90, 103, 107
770178	85, 90, 103, 107
770182	85, 90, 103, 107
770186	85, 90, 103, 107
770190	85, 90, 103, 107
770193	192, 213

Part No.	Page
770194	192, 213
770210	173, 213
770232	163
770233	163
770234	173, 213
770246	192
770247	192
770248	192
770249	192
770250	192
770251	192
770252	192
770253	192
770254	192
770255	192
770262	171, 183
770264	146
770266	146
770269	148
770272	182
770274	56
770275	56
770276	148
770277	56
770278	56
770319	195
770320	195
770326	56
770329	148
770330	148
770331	56
770332	56
770333	56
770334	56
770335	56
770336	148
770337	148
770338	148
770339	148
770340	56
770341	56
770342	56
770343	56
770351	182
770353	56
770354	56
770355	56
770356	56
770360	148
770361	148
770364	145, 149
770365	145, 149
770372	148
770373	148
770377	180, 196
770383	145, 212
770385	145, 212
770416	192
770419	56
770421	171, 174
770424	149
770425	149

Catalog 82181
Revised 4-08

www.tycoelectronics.com

Dimensions are in inches and millimeters unless otherwise specified. Values in brackets are metric equivalents.

Dimensions are shown for reference purposes only. Specifications subject to change.

USA: 1-800-522-6752
Canada: 1-905-470-4425
Mexico: 01-800-733-8926
C. America: 52-55-1106-0803

South America: 55-11-2103-6000
Hong Kong: 852-2735-1628
Japan: 81-44-844-8013
UK: 44-8706-080-208

Part Number Index (Continued)

Part No.	Page
770426	56
770427	56
770428	56
770429	56
770433	56
770441	56
770442	56
770443	56
770450	145, 149
770451	145, 149
770452	145, 149
770453	145, 149
770512	192
770526	154
770529	145, 212
770530	145, 212
770579	85, 88, 90-93, 103-106
770580	85, 88, 90-93, 103-106
770581	85, 88, 90, 92, 103, 105
770582	85, 88, 90, 92, 103, 105
770583	85, 88, 90, 92, 103, 105
770584	85, 88, 90, 92, 103, 105
770585	85, 88, 90, 92, 103, 105
770586	85, 88, 90, 92, 103, 105
770587	85, 88, 90, 92, 103, 105
770621	85, 90, 103, 107
770672	172
770673	172
770743	85, 90, 103, 107
770771	148
770782	146
770783	149
770784	149
770785	149
770810	149
770827	154, 157, 163
770829	154, 162-163
770834	85, 211
770835	85, 211
770842	146
770843	146
770846	154, 163
770858	85, 90, 103, 107
770859	85, 90, 103, 107
770872	85, 90, 103, 107
770872	97
770873	85, 90, 103, 107
770874	85, 90, 103, 107
770875	85, 90, 103, 107
770876	85, 90, 103, 107
770892	146
770901	86, 96, 211
770902	86, 96, 211
770903	86, 96, 211
770904	86, 96, 211
770966	85, 91, 105, 107
770967	85, 91, 105, 107
770968	85, 91, 105, 107
770969	85, 91, 105, 107
770970	85, 91, 105, 107
770971	85, 91, 105, 107
770972	85, 91, 105, 107

Part No.	Page
770973	85, 91, 105, 107
770974	85, 91, 105, 107
770983	53, 55
770985	85, 96
770986	85, 96
770987	85, 96
770988	85, 96
770994	185
770997	154, 162
794000	106, 205
794001	112
794012	153, 158
794015	146
794016	55
794017	55
794018	55
794019	55
794036	154, 163
794040	85, 90, 103, 107
794046	55, 211
794058	86
794059	86
794061	167
794065	85, 90, 103, 107
794066	85, 90, 103, 107
794067	85, 90, 103, 107
794068	85, 90, 103, 107
794069	85, 90, 103, 107
794070	85, 90, 103, 107
794071	85, 90, 103, 107
794072	85, 90, 103, 107
794073	85, 90, 103, 107
794074	85, 90, 103, 107
794075	85, 90, 103, 107
794076	85, 90, 103, 107
794077	85, 90, 103, 107
794078	85, 90, 103, 107
794079	85, 90, 103, 107
794096	171, 174
794103	55, 211
794105	85, 91, 105, 107
794106	85, 91, 105, 107
794107	85, 91, 105, 107
794108	85, 91, 105, 107
794116	214
794117	214
794118	214
794120	153, 163
794132	154, 157
794138	126, 212
794139	126, 212
794140	126, 212
794141	126
794142	126
794143	126
794184	90, 92, 101, 103, 105, 107
794185	101, 107
794186	90, 92, 101, 103, 105, 107
794187	101, 107
794188	90-92, 99, 101-102, 107

Part No.	Page
794189	101, 107
794190	90-92, 99, 101-102, 107
794191	101, 107
794192	90-91, 100-101, 105, 107
794193	101, 107
794194	90-91, 100-102, 107
794195	101, 107
794196	90-91, 100-105, 107
794197	101, 107
794198	90, 92, 100-101, 105, 107
794199	101, 107
794200	90-91, 100-102, 107
794201	101, 107
794202	90, 92, 100-101, 105, 107
794203	101, 107
794204	90-91, 100-102, 107
794205	101, 107
794206	90, 92, 100-101, 105, 107
794207	101, 107
794208	90, 92, 100-101, 105, 107
794209	101, 107
794210	90, 92, 100-101, 105, 107
794211	101, 107
794212	90, 92, 100-101, 105, 107
794213	101, 107
794214	90, 92, 100-101, 105, 107
794215	101, 107
794216	100, 211
794217	100, 211
794218	100, 211
794219	100, 211
794220	100, 211
794221	100, 211
794222	100, 211
794223	100, 211
794224	100
794225	100
794226	100
794227	100
794228	100
794229	100
794230	100
794231	100
794236	154, 161
794237	101, 107
794238	101, 107
794239	101, 107
794240	101, 107
794241	101, 107
794242	101, 107
794243	101, 107
794244	101, 107
794245	101, 107
794246	101, 107
794247	101, 107
794248	101, 107
794249	101, 107

Part No.	Page
794250	101, 107
794251	101, 107
794252	101, 107
794253	101, 107
794254	101, 107
794255	101, 107
794256	101, 107
794257	101, 107
794258	101, 107
794259	101, 107
794260	101, 107
794261	101, 107
794262	101, 107
794263	101, 107
794264	101, 107
794265	101, 107
794266	101, 107
794267	101, 107
794268	101, 107
794269	179
794270	179
794271	179
794272	179
794273	179
794274	179
794275	179
794276	179
794277	179
794278	179
794279	179
794280	179
794281	179
794282	179
794285	162
794287	154, 162
794302	128
794303	128
794304	128
794305	129
794306	129
794307	130
794308	130
794309	131
794310	131
794311	132
794312	132
794313	133
794325	85, 90, 104, 107
794326	85, 90, 104, 107
794327	85, 90, 104, 107
794328	85, 90, 104, 107
794329	85, 90, 104, 107
794330	85, 90, 104, 107
794349	128
794350	128
794351	128
794352	129
794353	129
794354	130
794355	130
794356	131
794357	131

Catalog 82181
Revised 4-08

www.tycoelectronics.com

Dimensions are in inches and millimeters unless otherwise specified. Values in brackets are metric equivalents.

Dimensions are shown for reference purposes only. Specifications subject to change.

USA: 1-800-522-6752
Canada: 1-905-470-4425
Mexico: 01-800-733-8926
C. America: 52-55-1106-0803

South America: 55-11-2103-6000
Hong Kong: 852-2735-1628
Japan: 81-44-844-8013
UK: 44-8706-080-208

Part Number Index (Continued)

Part No.	Page
794358	132
794359	132
794360	133
794369	101
794370	94
794374	85, 92
794380	53, 55
794406	86
794407	86
794412	214
794413	214
794415	132
794418	126,212
794421	126
794423	94
794429	131
794432	85, 90, 104, 107
794448	133
794449	133
794453	130
794454	131
794455	132
794466	128
794467	128
794468	129
794469	129
794470	130
794471	132
794472	133
794484	128
794485	128
794486	129
794487	129
794488	130
794489	130
794490	131
794491	131
794492	132
794493	132
794494	133
794507	133
794508	133
794509	133
794510	133
794511	133
794512	133
794513	133
794514	133
794515	133
794516	133
794526	133
794527	133
794528	133
794529	133
794530	133
794531	133
794532	133
794533	133
794534	133
794535	171
794536	171
794537	171

Part No.	Page
794538	171
794540	128
794542	127
794543	128
794545	171
794546	171
794550	127
794576	121, 206
794577	127
794578	121, 206
794579	127
794588	133
794589	133
794590	133
794594	127
794598	127
794606	19-22, 211
794606	20
794607	19-22, 211
794608	19, 22, 211
794609	19, 22, 211
794610	19-22
794610	20
794611	19-22
794611	20
794612	19, 22
794613	19, 22
794615	19, 28
794616	19, 27
794617	19, 21, 24, 34-37, 43-47
794618	21, 44
794619	21, 44
794620	21, 44
794621	21, 46
794622	21, 46
794623	21, 46
794624	21, 45
794625	21, 45
794626	21, 45
794627	21, 47
794628	21, 47
794629	21, 47
794630	21, 34
794631	21, 34
794632	21, 34
794633	21, 36
794634	21, 36
794635	21, 36
794636	21, 37
794637	21, 37
794638	21, 37
794657	126
794677	21, 43
794678	21, 43
794679	21, 43
794680	21, 35
794681	21, 35
794682	21, 35
794683	167
794699	167
794700	166

Part No.	Page
794707	171
794714	177
794715	177
794716	177
794727	171
794758	96
794760	177
794761	177
794762	177
794772	96
794772	97
794781	85, 96
794781	97
794805	85, 96
794805	97
794814	171
794815	171
794821	85, 96
794821	97
794824	96
794824	97
794851	171
794863	171
794894	85, 96
794894	97
794895	85, 96
794896	85, 96
794899	171
794900	171
794901	171
794911	191
794912	191
794939	85, 96
794940	85, 96
794941	85, 96
794942	85, 96
794953	122
794954	122
794955	114, 206
794956	114, 206
794957	114, 206
794958	114, 206
794991	180
794992	180
794993	180
794994	180
794995	96
797607	20
917353	61, 81
917354	61, 76-77
917683	12-13, 205
917684	12-13, 205
917686	10, 12-13
917687	10, 12-13
917688	10, 12-13
917689	10, 12-13
917690	10, 12-13
917691	10, 12-13
917692	10, 12-13
917693	10, 12-13
917694	10, 12-13
917695	10, 12-13

Part No.	Page
917696	10, 12-13
917697	10, 12-13
917698	10, 12
917699	10, 12
917700	10, 12
917701	10, 12
917702	10, 12
917703	10, 12
917704	10, 12
917705	10, 12
917706	10, 12
917707	10, 12
917708	10, 12
917709	10, 12
917722	10, 16
917723	10, 16
917724	10, 16
917725	10, 16
917726	10, 16
917727	10, 16
917728	10, 16
917729	10, 16
917730	10, 16
917731	10, 16
917732	10, 16
917733	10, 16
917745	61, 79
917746	79
917747	80
917764	12, 14, 205
917765	12, 14, 205
917780	10, 15
917781	10, 15
917782	10, 15
917783	10, 15
917784	10, 15
917785	10, 15
917786	10, 15
917787	10, 15
917788	10, 15
917789	10, 15
917790	10, 15
917791	10, 15
917845	61,73
917894	15
917895	15
917896	15
917897	15
917898	15
917899	15
917900	15
926302	171, 174
926307	171, 174
926308	171, 174
926309	171, 174
1375618	126-127
1376294	136
1376347	137, 212
1376348	137, 212
1376382	136, 138, 140
1376383	136, 138, 140
1376384	136, 138, 140

Catalog 82181
Revised 4-08

www.tycoelectronics.com

Dimensions are in inches and millimeters unless otherwise specified. Values in brackets are metric equivalents.

Dimensions are shown for reference purposes only. Specifications subject to change.

USA: 1-800-522-6752
Canada: 1-905-470-4425
Mexico: 01-800-733-8926
C. America: 52-55-1106-0803

South America: 55-11-2103-6000
Hong Kong: 852-2735-1628
Japan: 81-44-844-8013
UK: 44-8706-080-208

Part Number Index (Continued)

Part No.	Page
1376385	136, 138, 140
1376386	136, 139, 141
1376387	136, 139, 141
1376388	136-138, 140
1376389	136-138, 140
1376390	136-138, 140
1376391	136-138, 140
1376392	136, 139, 141
1376393	136, 139, 141
1376394	136-139
1376395	136-139
1376396	136-138
1376397	136-138
1376421	136, 138, 140
1376437	140
1376439	140
1376440	140
1376441	140
1376442	140
1376443	140
1376444	140
1445022	19-20, 23, 30-33, 38-42
1445048	19, 26
1445049	19, 25
1445050	20, 30
1445051	20, 31
1445052	20, 32
1445053	20, 33
1445054	20, 38
1445055	20, 39
1445056	20, 40
1445057	20, 41
1445058	20, 42
1445084	20, 30
1445085	20, 31
1445086	20, 32

Part No.	Page
1445087	20, 33
1445088	20, 38
1445089	20, 39
1445090	20, 40
1445091	20, 41
1445092	20, 42
1445093	20, 30
1445094	20, 31
1445095	20, 32
1445096	20, 33
1445097	20, 38
1445098	20, 39
1445099	20, 40
1445100	20, 41
1445101	20, 42
1565079	50, 211
1565080	50, 211
1565081	51
1565082	51
1565083	52
1565084	52
1565085	51
1565086	51
1565087	52
1565088	52
1586000	122
1586017	122
1586018	122
1586019	122
1586022	121
1586023	121
1586024	121
1586025	121
1586026	121
1586027	121
1586037	123

Part No.	Page
1586038	123
1586039	123
1586040	123
1586041	123
1586042	123
1586043	123
1586044	123
1586101	121
1586102	121
1586103	121
1586104	121
1586105	121
1586106	121
1586305	167
1586314	121
1586315	121
1586316	121
1586317	121
1586359	97
1586359	96
1586362	96
1586362	97
1586404	96
1586489	128-133
1586490	128-133
1586491	128-133
1586492	128-133
1586493	128-133
1586494	128-133
1586495	128-133
1586496	128-133
1586512	153, 161
1586514	153, 161
1586515	154, 161
1586518	153, 161
1586520	153, 161

Part No.	Page
1586522	153, 161
1586524	153, 161
1586525	154, 161
1586526	153, 161
1586528	153, 161
1586529	153, 161
1586530	153, 161
1586532	153, 161
1586534	154, 161
1586536	154, 161
1586539	162
1586544	153, 161
1586546	153, 161
1586585	124
1586586	124
1586587	124
1586588	124
1586627	161
1604210	178
1604254	178
1604256	178
1604941	178
1612334	50, 211
1612335	50, 211
1903486	60, 78
1903487	60, 78
1903720	60 ,66
1939343	60 ,73, 78
1939344	60
2029030	20, 29
2029047	20, 29
2029056	97
2029058	97
2029102	20, 29
2029104	20, 29

Catalog 82181
Revised 4-08

www.tycoelectronics.com

Dimensions are in inches and millimeters unless otherwise specified. Values in brackets are metric equivalents.

Dimensions are shown for reference purposes only. Specifications subject to change.

USA: 1-800-522-6752
Canada: 1-905-470-4425
Mexico: 01-800-733-8926
C. America: 52-55-1106-0803

South America: 55-11-2103-6000
Hong Kong: 852-2735-1628
Japan: 81-44-844-8013
UK: 44-8706-080-208

Tooling Part Number Index

Part No.	Page
58074	163, 206
58373	166, 210
58374	166, 210
58380	172, 192, 210
58382	192, 201, 206
58439	172, 192, 210
58514	210
58631	203, 210
58632	203, 210
65780	209-210
69710	166, 172, 192, 210
82276	210
90247	166
90546	210
90547	210
90548	210
90574	210
90575	210
90714	126,210
90717	86, 100,210
90758	210
90759	210
90760	210
90869	55, 210
90870	55, 210
90871	145,210
90872	145, 210
91002	55, 86, 145, 172, 181, 192, 203, 206
91085	163, 206
91112	163, 206
91387	120, 210
91388	120, 210
91500	172-173, 181, 192, 210
91501	22, 209-210

Part No.	Page
91502	22, 209-210
91504	155, 210
91506	172-173, 192,210
91508	172-173, 192,210
91510	172-173, 192,210
91512	155-156, 210
91515	155, 210
91522	86, 96, 100, 210
91526	112, 210
91528	155
91529	86, 96, 100, 210
91534	112, 210
91536	86
91552	210
91567	61, 210
91569	61, 210
91594	100, 210
188688	126
189727	86, 206
231894	163, 206
231920	163, 206
234603	12, 210
234604	12, 210
234605	12
234912	61
234914	61
305183	155, 206
318831	55, 206
318837	145, 206
318845	166, 206
318851	172, 181, 192, 201, 206
354500	207
356114	201
356337	201
356500	208

Part No.	Page
455822	112, 206
455830	112, 155, 206
457306	116
465644	155, 206
466320	155-156, 172-173, 212-213
466351	112, 211
466352	112, 211
466426	155, 212
466462	203, 213
466588	172, 213
466597	172-173, 213
466616	172, 212
466656	145, 212
466686	55, 211
466878	145, 212
466913	211
466917	212-213
466920	212-213
466922	212
466955	211
466959	212
466986	211
466989	213
466990	211
567066	86, 96, 100, 211
567067	86, 96, 211
567211	192, 213
567212	192, 213
567213	192, 213
567214	192, 213
567216	173, 213
567251	211
567252	192, 213
567273	145, 212
567306	166, 212

Part No.	Page
567309	166, 212
567337	145, 212
567418	86, 100, 211
567902	211
567913	213
567914	213
567959	126-127, 212
567960	126-127, 212
587309	212
680307	126-127, 212
680308	126-127, 212
680350	126, 212
680582	86, 100, 211
680854	100, 211
680893	22, 211
680894	22, 211
687763	155, 172-173, 181, 212-213
687765	155, 212
687898	172-173, 213
687926	55, 211
687996	203, 206
691458	181
794381	22
843996	207
854040	22, 211
1385194	22, 211
1385377	120, 212
1385448	120, 212
1385817	120
1586343	22
1586344	172, 206
1586700	50, 210
1596277	

Catalog 82181
Revised 4-08

www.tycoelectronics.com

Dimensions are in inches and millimeters unless otherwise specified. Values in brackets are metric equivalents.

Dimensions are shown for reference purposes only. Specifications subject to change.

USA: 1-800-522-6752
Canada: 1-905-470-4425
Mexico: 01-800-733-8926
C. America: 52-55-1106-0803

South America: 55-11-2103-6000
Hong Kong: 852-2735-1628
Japan: 81-44-844-8013
UK: 44-8706-080-208

Engineering Notes

Catalog 82181
Revised 4-08

www.tycoelectronics.com

Dimensions are in inches and millimeters unless otherwise specified. Values in brackets are metric equivalents.

Dimensions are shown for reference purposes only. Specifications subject to change.

USA: 1-800-522-6752
Canada: 1-905-470-4425
Mexico: 01-800-733-8926
C. America: 52-55-1106-0803

South America: 55-11-2103-6000
Hong Kong: 852-2735-1628
Japan: 81-44-844-8013
UK: 44-8706-080-208

Engineering Notes

Catalog 82181
Revised 4-08

www.tycoelectronics.com

Dimensions are in inches and millimeters unless otherwise specified. Values in brackets are metric equivalents.

Dimensions are shown for reference purposes only. Specifications subject to change.

USA: 1-800-522-6752
Canada: 1-905-470-4425
Mexico: 01-800-733-8926
C. America: 52-55-1106-0803

South America: 55-11-2103-6000
Hong Kong: 852-2735-1628
Japan: 81-44-844-8013
UK: 44-8706-080-208

Engineering Notes

Catalog 82181
Revised 4-08

www.tycoelectronics.com

Dimensions are in inches and millimeters unless otherwise specified. Values in brackets are metric equivalents.

Dimensions are shown for reference purposes only. Specifications subject to change.

USA: 1-800-522-6752
Canada: 1-905-470-4425
Mexico: 01-800-733-8926
C. America: 52-55-1106-0803

South America: 55-11-2103-6000
Hong Kong: 852-2735-1628
Japan: 81-44-844-8013
UK: 44-8706-080-208

Americas

Argentina – Buenos Aires
Phone: +54-11-4733-2200
Fax: +54-11-4733-2211

Brasil – São Paulo
Phone: +55-11-3611-1311
Fax: +55-11-3611-0397

Canada – Toronto
Phone: +905-475-6222
Fax: +905-474-5520
Product Information Center: (Technical Support)
Phone: +905-470-4425
Fax: +905-474-5525

Colombia – Bogota
Phone: +57-1-231-9398
Fax: +57-1-660-0206

Mexico – Mexico City
Phone: +52-55-1106-0800
+01-800-733-8926
Fax: +52-55-1106-0901

United States – Harrisburg, PA
Phone: +717-564-0100
Fax: +717-986-7575
Product Information Center: (Technical Support)
Phone: +800-522-6752
Fax: +717-986-7575

For Latin/South American Countries not shown
Phone: +54-11-4733-2015
Fax: +54-11-4733-2083

Asia/Pacific

Australia – Sydney
Phone: +61-2-9554-2600
Fax: +61-2-9502-2556
Product Information Center: (Technical Support)
Phone: +61-2-9840-8200
Fax: +61-2-9634-6188

India – Bangalore
Phone: +91-80-285-40800
Fax: +91-80-285-40820

Indonesia – Jakarta
Phone: +65-6482-0311
Fax: +65-6482-1012

Japan – Toyko
Phone: +81-44-844-8111
Fax: +81-44-812-3207
Product Information Center: (Technical Support)
Phone: +81-44-844-8013
Fax: +81-44-812-3200

Korea – Seoul
Phone: +82-2-3415-4500
Fax: +82-2-3486-3810

Malaysia – Kuala Lumpur
Phone: +60-3-78053055
Fax: +60-3-78053066

New Zealand – Auckland
Phone: +64-9-634-4580
Fax: +64-9-634-4586

Philippines – Makati City
Phone: +632-848-0171
Fax: +632-867-8661

People's Republic of China
Hong Kong
Phone: +852-2735-1628
Fax: +852-2735-0243

Shanghai
Phone: +86-21-2407-1588
Fax: +86-21-2407-1599

Taiwan – Taipei
Phone: +886-2-8768-2788
Fax: +886-2-8768-2268

Singapore – Singapore
Phone: +65-6482-0311
Fax: +65-6482-1012

Thailand – Bangkok
Phone: +66-2-955-0500
Fax: +66-2-955-0505

Vietnam and Indochina –
Ho Chi Minh City
Phone: +84-8 930-5546
Fax: +84-8 930-3443

Europe/Middle East/Africa

Austria – Vienna
Phone: +43-1 90 5 60-0
Fax: +43-1 90 5 60-1333

Belgium – Kessel-Lo
Phone: +32-16-35-23-00
Fax: +32-16-35-23-52

Bulgaria – Sofia
Phone: +359-2-971-2152
Fax: +359-2-971-2153

Czech Republic – Kurim
Phone: +420-5-41-162-111
Fax: +420-5-41-162-223

Denmark – Glostrup
Phone: +45-43-480-452
Fax: +45-43-441-414

Egypt – Cairo
Phone: +20-2-29 04 281
Fax: +20-2-41 92 334

Estonia – Tartu
Phone: +372-5138-274
Fax: +372-7400-779

Finland – Helsinki
Phone: +358-95-12-34-20
Fax: +358-95-12-34-250

France – Cergy-Pontoise
Phone: +33-1-3420-8888
Fax: +33-1-3420-8600
Product Information Center: (Technical Support)
Phone: +33-1-3420-8943
Fax: +33-1-3420-8623

Germany – Bensheim
Phone: +49-6251-133-0
Fax: +49-6251-133-1600
Product Information Center: (Technical Support)
Phone: +49-6251-133-1999
Fax: +49-6251-133-1988

Germany – Langen
Phone: +49-6103-709-0
Fax: +49-6103-709-1223

Germany – Speyer
Phone: +49-6232-30-0
Fax: +49-6232-30-2243

Germany - HTS Division – Neunkirchen
Phone: +49-2247-305-0
Fax: +49-2247-305-122

Greece – Athens
Phone: +30-210-9370-396/397
Fax: +30-210-9370-655

Hungary – Budapest
Phone: +36-1-289-1000
Fax: +36-1-289-1010

Ireland – Dublin
Phone: +353-1-820-3000
Fax: +353-1-820-9790

Israel – Yokneam
Phone: +972-4-959-0508
Fax: +972-4-959-0506

Italy – Collegno (Torino)
Phone: +39-011-4012-111
Fax: +39-011-4031116

Lithuania – Vilnius
Phone: +370-5-2131-402
Fax: +370-5-2131-403

Netherlands – 's-Hertogenbosch
Phone: +31-73-624-62-46
Fax: +31-73-621-23-65
Product Information Center: (Technical Support)
Phone: +31-73-6246-999
Fax: +31-73-6246-998

Norway – Nesbru
Phone: +47-66-77-8886
Fax: +47-66-77-8855

Poland – Warsaw
Phone: +48-22-45-76-700
Fax: +48-22-45-76-720

Romania – Bucharest
Phone: +40-21-311-3479/3596
Fax: +40-21-312-0574

Russia – Moscow
Phone: +7-495-926-5506/07/08/09
Fax: +7-495-926-5505

Russia – St. Petersburg
Phone: +7-812-718-8192
Fax: +7-812-718-8193

Slovenia – Ljubljana
Phone: +386-1561-3270
Fax: +386-1561-3240

South Africa – Port Elizabeth
Phone: +2741-503-4500
Fax: +2741-581-0440

Spain – Barcelona
Phone: +34-93-291-0330
Fax: +34-93-201-7879
Product Information Center: (Technical Support):
Phone: +34-93-291-0330
Fax: +34-93-200-3779

Sweden – Upplands Väsby
Phone: +46-8-50-72-50-00
Fax: +46-8-50-72-50-01

Switzerland – Steinach
Phone: +41-71-447-0447
Fax: +41-71-447-0444

Turkey – Istanbul
Phone: +90-212-281-8181/2/3
Fax: +90-212-281-8184

Ukraine – Kiev
Phone: +380-044-206-2265
Fax: +380-044-206-2264

United Kingdom – Swindon
Phone: +44-8706-080-208
Fax: +44-1793-572-516
Product Information Center: (Technical Support)
Freephone GB: 0800-267-666
Phone: +44-8706-080-208
Fax: +44-208-420-8081

For Middle East/African Countries Not Shown
Phone: +33-1-3420-8866
Fax: +33-1-3420-8300

82181–7.5M–MS–FP–4-08 0G3B
Printed in the U.S.A.

Tyco Electronics Corporation
www.tycoelectronics.com

Tyco Electronics Corporation
Harrisburg, PA

tycoelectronics.com

82181-7.5M-MS-FP-4-08-2-0G3B

Tyco Electronics

Our commitment. Your advantage.