REVISIONS				
REV SYM	ECO NUMBER	DESCRIPTION	BY DATE	APP'D DATE
1		ORIGINAL RELEASE	MF 8-17-10	

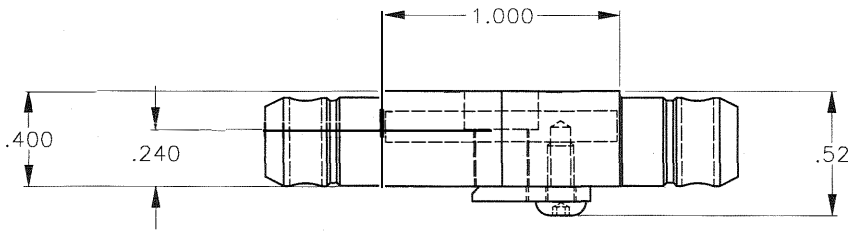

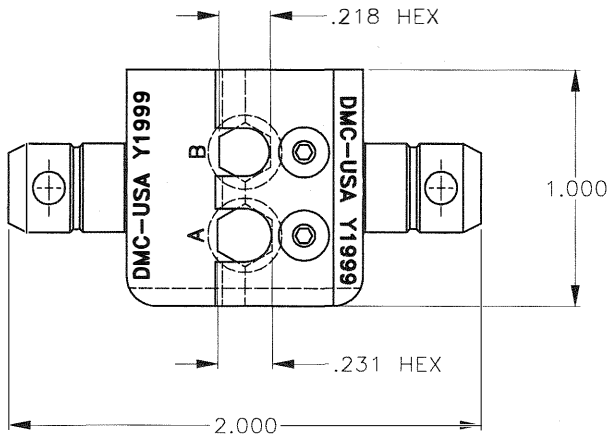

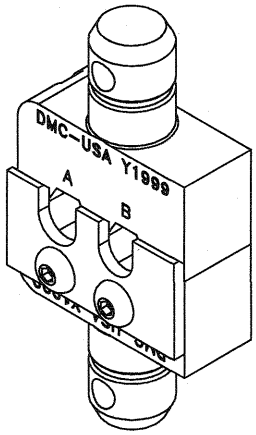

ISOMETRIC VIEW

UNCONTROLLED DOCUMENT
WILL NOT BE UPDATED

DIMENSIONS IN INCHES-UNLESS OTHERWISE SPECIFIED

RESTRICTED & CONFIDENTIAL

CONFIDENTIAL PROPERTY OF DANIELS MANUFACTURING CORP. NOT TO BE DISCLOSED TO OTHERS, REPRODUCED OR USED FOR ANY OTHER PURPOSE EXCEPT AS AUTHORIZED IN WRITING BY DANIELS MANUFACTURING. MUST BE RETURNED TO DANIELS MANUFACTURING CORP. ON COMPLETION OF ORDER OR OTHER PURPOSE FOR WHICH LENT.

CREATED FROM AN INVENTOR MODEL. CHANGES MUST BE REFLECTED IN THE 3D PART

DO NOT SCALE DRAWING

MATERIAL

HEAT TREAT

FINISH

ITEM	PART NO.	QTY.	DESCRIPTION/REMARKS

DRN. Matt Frink DATE 8-17-10

CHK'D. DATE

APP'D. DATE

APP'D. DATE

NOTE:
THIS DRAWING IS AN OUTLINE DRAWING OF THE RESPECTIVE DMC PART NUMBER INDICATED. ACTUAL DMC PART NUMBER IS DRAWING NUMBER WITHOUT THE "-ENV" SUFFIX

DMC DANIELS MANUFACTURING CORP.
ORLANDO, FLORIDA
CAGE 11851

TITLE
DIE SET
ENVELOPE DRAWING

WHERE USED: HX4

SIZE	SCALE	CAD P/N	SHEET	OF
B	NTS	Y1999-ENV	1	1

POSTING	P/N	REV.
	Y1999-ENV	1

Mouser Electronics

Authorized Distributor

Click to View Pricing, Inventory, Delivery & Lifecycle Information:

Daniels Manufacturing:

Y1999