版数 VER.	年月日 DATE	CN NO.	変更内容 DESCRIPTION	製図 DR.	担当 CHK.	査閲 APPD.	承認 APPD.

図面番号(DRAWING NO.) SJ119577

WISDOM承認 2018/03/27

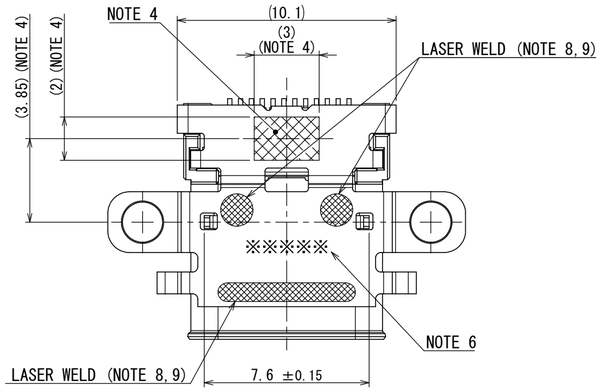

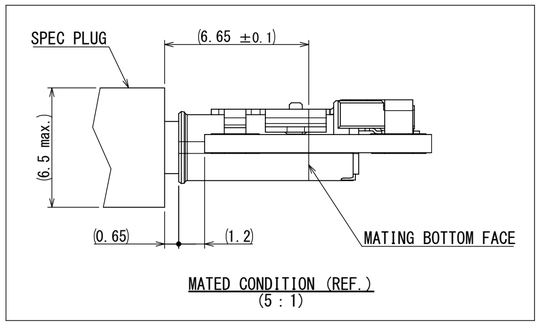

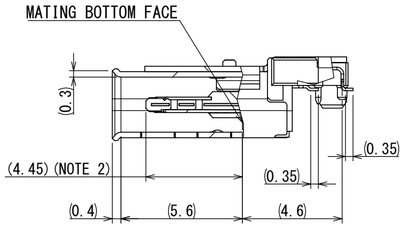

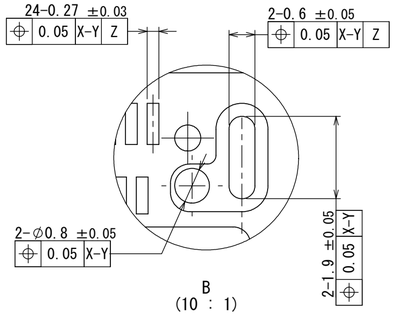

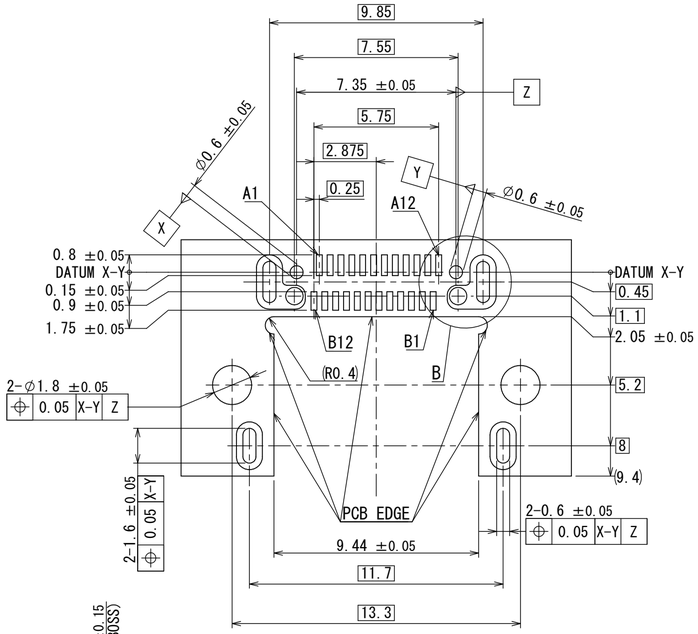

SURFACE VIEW FROM CONNECTOR MOUNTING SIDE
APPLICABLE P.C.B DIMENSION (REF.)
(5 : 1)

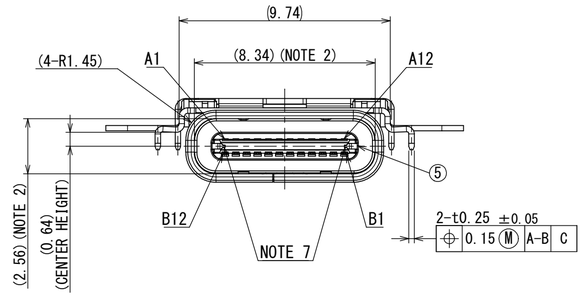

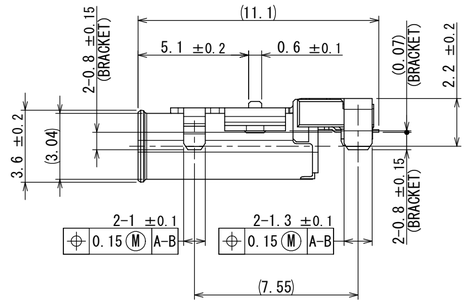

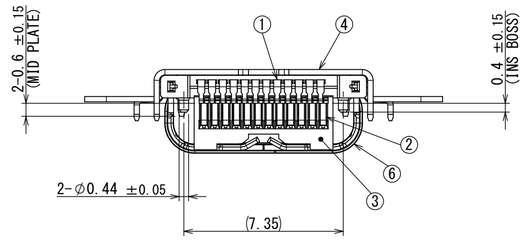

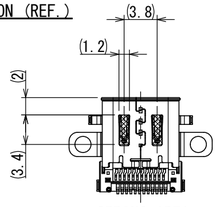

SPRING AREA
(NOTE 5)

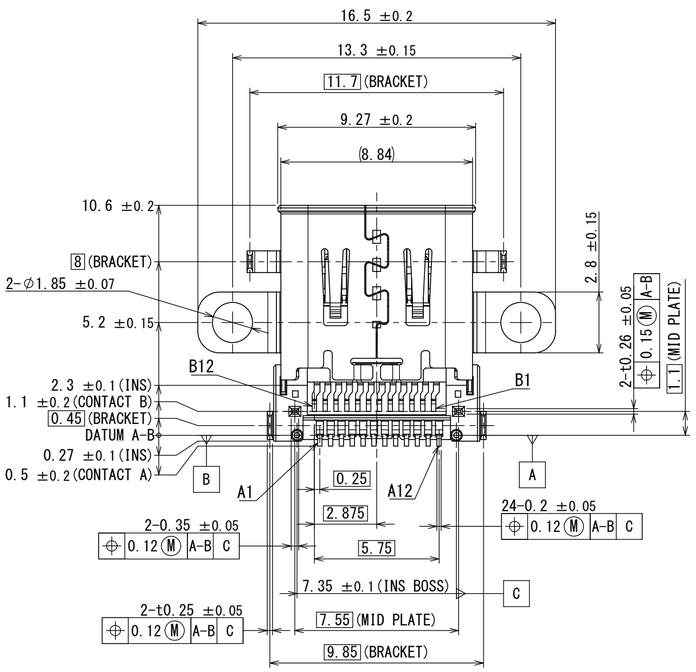

[TABLE-1]

FIRST DIGIT		SECOND DIGIT		THIRD DIGIT		FOURTH DIGIT		FIFTH DIGIT	
YEAR	MARKING	MONTH	MARKING	DAY	MARKING	HOUR	MARKING	LINE CODE	MARKING
2016	6	1	1	1	1	0	0	1	1
2017	7	2	2	2	2	1	1	2	2
2018	8	3	3	3	3	2	2	3	3
2019	9	4	4	4	4	3	3	4	4
2020	0	5	5	5	5	4	4	5	5
2021	1	6	6	6	6	5	5	6	6
2022	2	7	7	7	7	6	6	7	7
2023	3	8	8	8	8	7	7	8	8
2024	4	9	9	9	9	8	8	9	9
2025	5	10	0	10	A	9	9	10	A
:	:	11	X	11	B	10	A	11	B
:	:	12	Y	12	C	11	B	12	C
				13	D	12	C	13	D
				14	E	13	D	14	E
				15	F	14	E	15	F
				16	G	15	F	16	G
				17	H	16	G	17	H
				18	J	17	H	18	J
				19	K	18	J	19	K
				20	L	19	K	20	L
				21	M	20	L	21	M
				22	N	21	M	22	N
				23	P	22	N	23	P
				24	Q	23	P	24	Q
				25	R			25	R
				26	S			26	S
				27	T			27	T
				28	U			28	U
				29	V			29	V
				30	W			30	W
				31	X			31	X
								32	Y
								33	Z

NOTE 1. COPLANARITY OF SMT TERMINAL AND BRACKET SHALL BE 0.1 MAXIMUM.
NOTE 2. MATING DIMENSIONS CONSIST OF "Universal Serial Bus Type-C Cable and Connector Specification 1.2"
NOTE 3. THE SHELL LENGTH IS LESS THAN THE 6.2MM RECOMMENDED IN THE USB STANDARD. THE SYSTEM IMPLEMENTER IS RESPONSIBLE FOR ACHIEVING END PRODUCT RELIABILITY FOR THE MATED CONNECTOR CONDITION. REFER TO USB TYPE-C CABLE AND CONNECTOR SPECIFICATION REVISION 1.2 SECTION 3.2.1 NOTE 7.
NOTE 4. VACUUM AREA.
NOTE 5. THIS DIMENSION IS SET AT MAXIMUM RATE OF THE SPRING STICKING OUT WHEN MATING WITH PLUG.
NOTE 6. PRODUCTION LOT NUMBER IS MARKED AS SHOWN IN TABLE-1. (LASER MARKING)
NOTE 7. METAL EXPOSED AREA SIZE COULD BE SLIGHTLY CHANGED BASED ON MOLDING PROCESS CONDITION IN EACH LOT, HOWEVER THIS WOULD NOT AFFECT CONNECTOR FUNCTION.
NOTE 8. CONVEX OF LASER WELDING POINT SHOULD BE 0.15 OR LESS.
NOTE 9. LASER WELD POINTS MAY BE DISCOLORED.
NOTE 10. PIN ASSIGNMENT (FRONT VIEW)

Pin No.	A1	A2	A3	A4	A5	A6	A7	A8	A9	A10	A11	A12
	GND	TX1+	TX1-	V_{BUS}	CC1	D+	D-	SBU1	V_{BUS}	RX2-	RX2+	GND
	GND	RX1+	RX1-	V_{BUS}	SBU2	D-	D+	CC2	V_{BUS}	TX2-	TX2+	GND
Pin No.	B12	B11	B10	B9	B8	B7	B6	B5	B4	B3	B2	B1

符号 No.	名称 DESCRIPTION	個数 QTY.	材料 MATERIAL	仕上 FINISH	備考 REMARKS
6	SHELL	1	STAINLESS STEEL	NICKEL PLATING	NICKLE: 0.5μm MIN.
5	MID PLATE	1	STAINLESS STEEL	NICKEL PLATING	NICKLE: 0.5μm MIN.
4	BRACKET	1	STAINLESS STEEL	NICKEL PLATING	NICKLE: 0.5μm MIN.
3	INSULATOR	1	HEAT RESISRING PLASTIC	—	COLOR:BLACK
2	CONTACT B	12	COPPER ALLOY	CONTACT AREA: GOLD OVER NICKEL SOLDER TAILS: GOLD FLASH OVER NICKEL	CONTACT AREA : NICKEL:1.5μm MIN. GOLD:0.1μm MIN. SOLDER TAILS : NICKEL:1.5μm MIN. GOLD FLASH:0.03μm MIN.
1	CONTACT A	12	COPPER ALLOY		

仕様書(SPECIFICATION) JACS-30353

第1版(ORIGINAL DATE) 26/MAR/2018

製図 DR.

担当 CHK. Y.SATOU

査閲 APPD. —

承認 APPD. T.MASUMOTO

一般公差(GENERAL TOLERANCE)

寸法(DIMENSION): . ±0.8 / .× ±0.4 / .×× ±0.1 / .××× ±

角度(ANGLES): ×° ± / ×°×' ±

単位(UNIT) : mm

尺度(SCALE) 5 : 1

シリーズ(SERIES) DX07

名称(TITLE) DX07BN24JA2

質量(MASS)

日本航空電子工業株式会社
JAPAN AVIATION ELECTRONICS INDUSTRY, LTD.

図面番号(DRAWING NO.) SJ119577

SIZE A2

版数(VER.) 1

JAE-CONNECTOR.COM
Reference only

DXF-C-213H(12.08)

S/W

JAE Connector DIV. Proprietary.Copyright(C) 2018, Japan Aviation Electronics Industry, LTD.

Mouser Electronics

Authorized Distributor

Click to View Pricing, Inventory, Delivery & Lifecycle Information:

JAE Electronics:
DX07BN24JA2R1300