Downloaded from Arrow.com.

THIS COPY IS PROVIDED ON A RESTRICTED BASIS AND IS NOT TO BE USED IN ANY WAY DETRIMENTAL TO THE INTERESTS OF PANDUIT CORP.

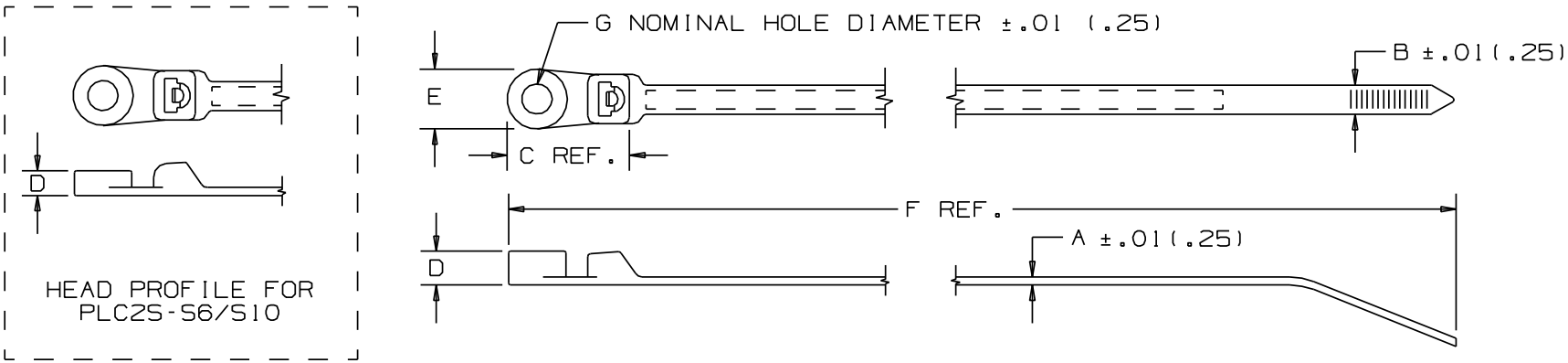

PANDUIT PART NO. *	BUNDLE DIA. MIN. In (mm)	BUNDLE DIA. MAX. In (mm)	A In (mm)	B In (mm)	C In (mm)	D In (mm)	E In (mm)	F In (mm)	G In (mm)	MIN. LOOP TENSILE lbs (N)	CROSS-SECTION	RECM. FASTENER	WEIGHT lbs/100pcs (g)
PLC1M-S4	.06 (1.5)	.75 (19)	.045 (1.1)	.100 (2.5)	.542 (13.8)	.153 (3.9)	.239 (6.1)	4.3 (109.2)	.122 (3.1)	18 (80)	MINIATURE	#4 (M2.5) SCREW	.08 (36)
PLC1.5I-S8	.06 (1.5)	1.25 (32)	.045 (1.1)	.135 (3.4)	.694 (17.6)	.166 (4.2)	.335 (8.5)	6.1 (154.9)	.174 (4.4)	40 (178)	INTERMEDIATE	#8 (M4) SCREW	.18 (82)
PLC2S-S6	.06 (1.5)	1.84 (47)	.047 (1.2)	.190 (4.8)	.765 (19.4)	.160 (4.1)	.373 (9.5)	7.9 (200.7)	.148 (3.8)	50 (222)	STANDARD	#6 (M3) SCREW	.32 (145)
PLC2S-S10	.06 (1.5)	1.84 (47)	.047 (1.2)	.190 (4.8)	.765 (19.4)	.160 (4.1)	.373 (9.5)	7.9 (200.7)	.200 (5.1)	50 (222)	STANDARD	#10 (M5) SCREW	.32 (145)
PLC3S-S10	.06 (1.5)	3.00 (76)	.052 (1.3)	.190 (4.8)	.765 (19.4)	.220 (5.6)	.373 (9.5)	12 (304.8)	.200 (5.1)	50 (222)	STANDARD	#10 (M5) SCREW	.50 (227)
PLC4S-S10	.06 (1.5)	4.00 (102)	.052 (1.3)	.190 (4.8)	.765 (19.4)	.220 (5.6)	.373 (9.5)	15 (381.0)	.200 (5.1)	50 (222)	STANDARD	#10 (M5) SCREW	.59 (268)

NOTES:

*1) SEE www.panduit.com FOR CURRENT PART NUMBER SUFFIX DESIGNATION AND FOR PACKAGE SIZE AND PART COLOR.

DIMENSIONS IN PARENTHESES ARE IN METRIC UNITS

REV	DATE	BY	CHK	APR	DESCRIPTION	ECN
19	8/13/13	BWG	KJM	RTFI	UPDATED TITLE BORDER, REVISED NOTES. SEE ECN FOR DETAILS.	SS-2724/19

TITLE

PAN-TY LOCKING CLAMP TIE - PLC SERIES

CUSTOMER DRAWING

ITEM REVISION NAME: W10001EH/00

DATASET FILE NAME: W10001EH/00-SS-2724_REV19

UNLESS OTHERWISE SPECIFIED, DIMENSIONAL TOLERANCES ARE: IN (mm)

.* : --- .*** : .020(.51)

.** : .02(.51) ANGLES : ---

THIRD ANGLE PROJECTION

MATERIAL: NYLON 6.6

DRAWING NUMBER: SS-2724

DRAWN BY	DATE	CHK	SCALE		SIZE
L.V./AJC	2-11-71	HVP	NONE	SHT 1 OF 1	A

D101000A/16