TOP VIEW

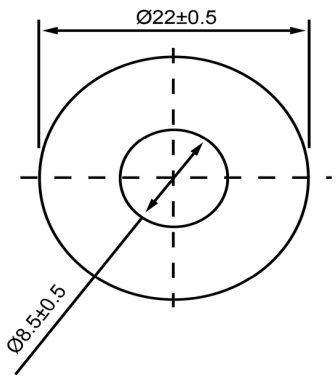

SIDE VIEW

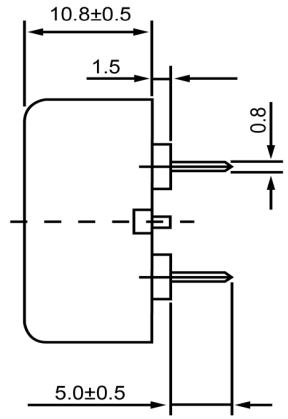

BOTTOM VIEW

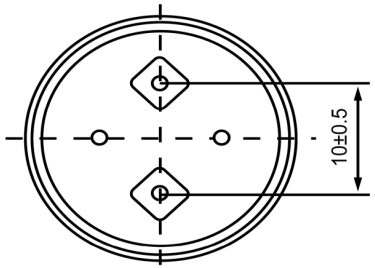

Specifications

Description	Value	Unit
Technology	Piezo	
Resonant Frequency	4,000	(Hz)
Rated Voltage	3	(V)
SPL @ 10cm	85	(dBA)
Capacitance	15,000	(pF)
Mount Type	Thru-hole	
Voltage Range	1 ~ 40	(V)
Max Rated Current	5	(mA)
Housing Material	PBT	
Operating Temperature	-40 ~ +85	°C
Storage Temperature	-40 ~ +85	°C
Weight	3.2	(g)

Notes

1) All dimensions are in mm unless otherwise noted
2) All parts meet RoHS

DB UNLIMITED

Revision History

Version	Description	Date	Approved
1	Released from Engineering	10/21/2013	J.S

Drawn by	Date	Checked by	Date	Approved by	Date
A.B.	10/21/2013	C.E.	10/21/2013	J.S	10/21/2013

Piezo Transducer

TP224003-3

Additional considerations can be found at www.dbunlimitedco.com/technical-articles.

sales@dbunlimitedco.com | www.dbunlimitedco.com
©2013, DB Unlimited

Downloaded from Arrow.com.