Identification	Cable entry	Part number Low construction	Part number High construction	Drawing (dimensions in mm)
Han® B , Bulkhead mounted housings, With self-closing cover, Han-Easy Lock® 		09 30 016 1306		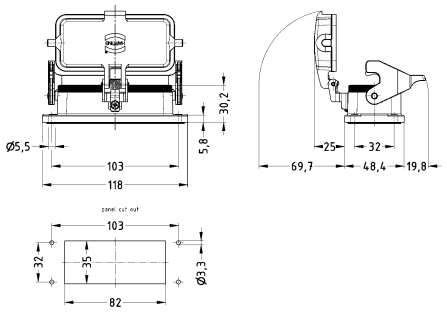 Panel cut out
Han® B , Surface mounted housing, Side entry, Han-Easy Lock® 	1x M25 1x M32 2x M25 2x M32	19 30 016 1251 19 30 016 1291	19 30 016 0252 19 30 016 0291 19 30 016 0292	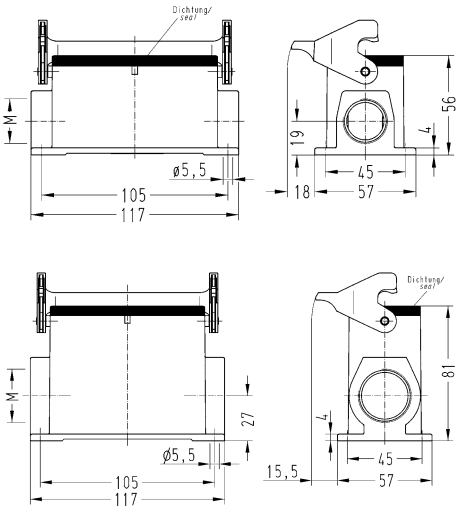
Han® B , Surface mounted housing, With thermo-plastic cover, Side entry, Han-Easy Lock® 	1x M25 2x M25 2x M32	19 30 016 1256 19 30 016 1296	19 30 016 0297	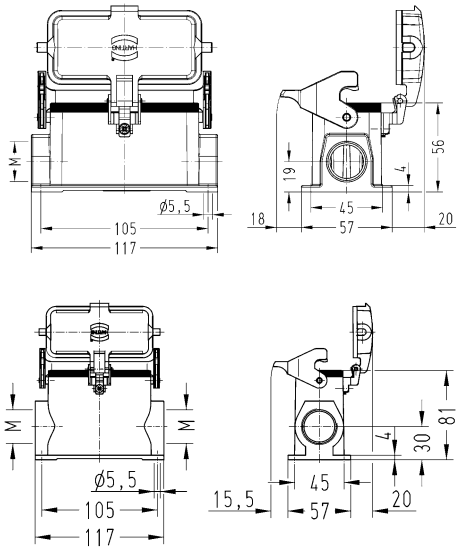

Housings