Flow sensor

SFAW

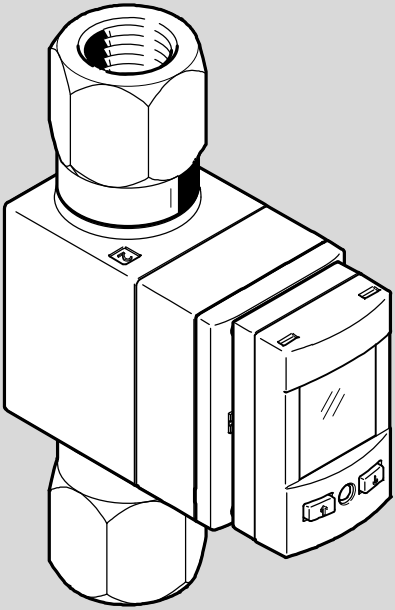

FESTO

en **Operating instructions**

8080025
2017-10b
[8080027]

Translation of the original instructions
SFAW-EN

Installation and commissioning must be carried out only by properly qualified personnel in accordance with these operating instructions.

Identification of hazards and instructions on how to prevent them:

Warning
Hazards that can cause death or serious injuries.

Note
Dangers that can result in material damage or failure of function.

Other symbols:

Recommendations or references to additional sources of information.

English – Flow sensor SFAW

Table of contents

1 Product description

For all available product documentation ➔ www.festo.com/pk

You can find detailed specifications for the product, the device description file (IODD) with a description of the IO-Link parameters and the declaration of conformity at: ➔ www.festo.com/sp www.festo.com.

The operating instructions describe the entire function range. The function range is limited, depending on the product variant.

1.1 Overview

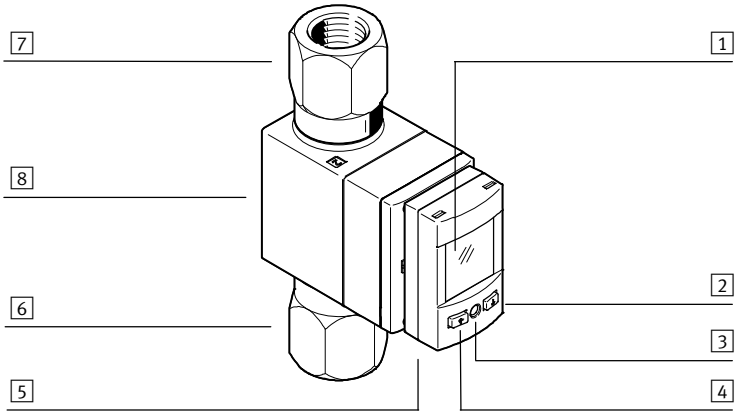

1 Display, rotatable
2 B key
3 Edit button
4 A key
5 Electrical connection
6 Fluid connection 1 (input), rotatable
7 Fluid connection 2 (output), rotatable
8 Retaining plate

Fig. 1 Control sections and connections

1.2 Key features

Feature	Value	Description
Type	SFAW	Flow sensor for liquid media
Flow measuring range	32	Max. 32 l/min.
	100	Max. 100 l/min.
Further measured variable		Without temperature measurement
	T	Temperature
Connection type, input	C	Clamped terminal connection
	S	Female hose connector
	T	Female thread
	X	User connection (➔ 4.3 Fluid connection)
Connection standard, input		Without specification
	S5	Clamped terminal connection in accordance with DIN 32676:2009-05
Connection size, input	G12 ... G1	Thread G ½, G ¾, G 1
	R12 ... R1	Thread R ½, R ¾, R 1
	N12 ... N1	Thread NPT ½, NPT ¾, NPT 1
	13, 19	Female hose connector 13 mm, 19 mm
	15, 20	Clamped terminal connection DN 15, DN 20
Connection type, output	C	Clamped terminal connection
	S	Female hose connector
	T	Female thread
	E	As for input
	X	User-provided connection (➔ 4.3 Fluid connection)
Connection standard, output		No specification
	S5	Clamped terminal connection in accordance with DIN 32676:2009-05
Connection size, output	G12 ... G1	Thread G ½, G ¾, G 1
	R12..., R1	Thread R ½, R ¾, R 1
	N12 ... N1	Thread NPT ½, NPT ¾, NPT 1
	13, 19	Female hose connector 13 mm, 19 mm
	15, 20	Clamped terminal connection DN 15, DN 20
Type of mounting		without mounting accessories
	W	Wall mounting
Electrical output 1	PNLK	PNP or NPN or IO-Link
Electrical output 2	PN	PNP or NPN
	PNVBA	PNP or NPN or 0...10 V or 1...5 V or 4...20 mA
Electrical output 3	VBA	0...10 V or 1...5 V or 4...20 mA
Electrical connection	M12	Plug connector M12, A-coded
Electrical accessories	+2.5 S	Straight socket, 2.5 m cable
	+5 S	Straight socket, 5 m cable
Protective devices	G	Safety guard

Tab. 1 Overview of variants

2 Function and application

The SFAW is intended for use in monitoring the flow, volume and temperature of liquid media in piping or terminal devices in industry. The flow velocity is recorded in accordance with the vortex principle. The flow rate and the accumulated volume are calculated from the flow velocity. An optional, integrated temperature sensor records the medium temperature.

Interfacing to the higher-level systems is provided by 2 switching outputs, an analogue output and/or an IO-Link interface, depending on the type. The outputs can be configured as appropriate to the application.

The switching outputs can be configured to monitor a threshold value or a range. For each output, PNP or NPN and normally open (NO) or normally closed (NC) can optionally be set. Via the IO-Link interface, process values can be read out and parameters changed and transmitted to additional devices.

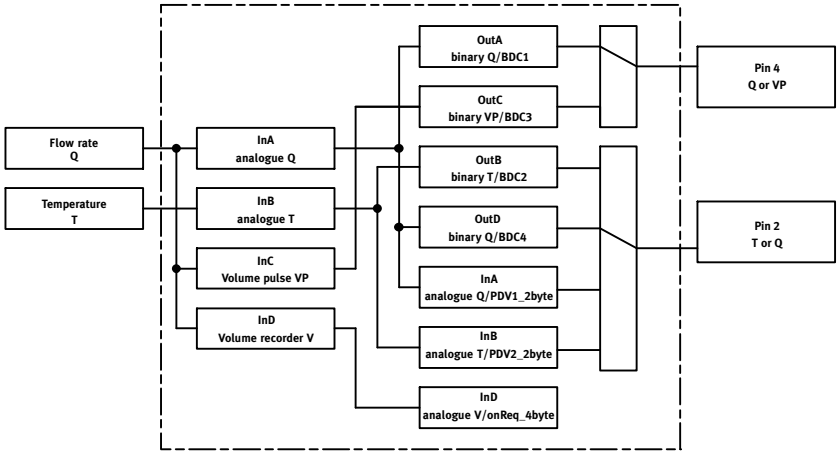

Fig. 2 SFAW-...PNLK-PNVBA-...: Signal structure

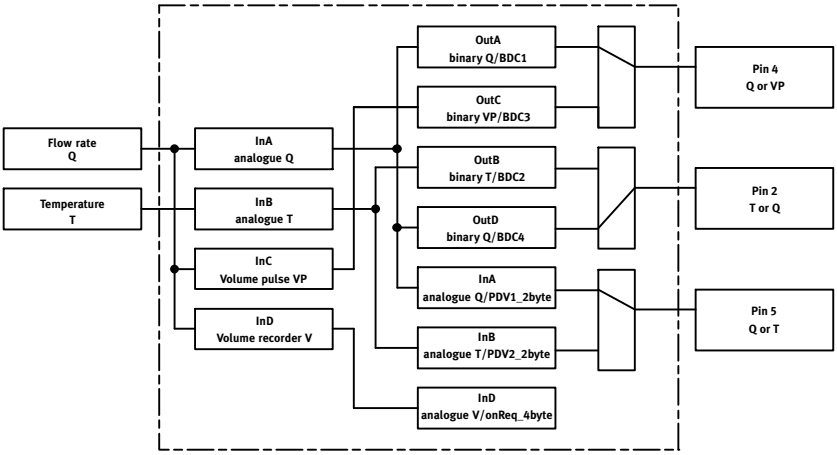

Fig. 3 SFAW-...PNLK-PN-VBA-...: Signal structure

2.1 Operating statuses

Operating status	Function
RUN mode	– Basic status after the operating voltage is switched on – Display of the current measured value – Display of the selected inputs and outputs – Switchover between the measured variables of flow rate, volume and temperature
SHOW mode	– Display of current settings of the switching outputs and analogue output – Display and resetting of the minimum and maximum values
Edit mode	– Setting or modification of parameters
TEACH mode	– Acceptance of the current measured value to determine switching points
RECORDER mode	– Manual measurement of the accumulated volume

Tab. 2 Operating statuses of the SFAW

2.2 Switching outputs

2.2.1 Switching functions

Threshold value comparator in the flow measurement for OutA or OutD and in the temperature measurement for OutB

Function	NO (normally open)	NC (normally closed)
Switching function: – 1 switching point (SP) TEACH mode[1]: – 2 teach-in points (TP1, TP2) – SP = ½ (TP1+TP2)	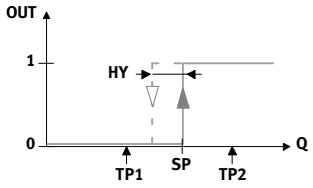	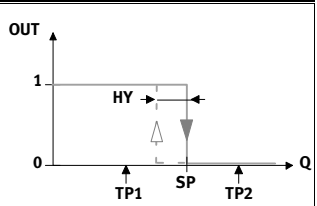

1) Only with flow measurement

Tab. 3 Threshold value comparator: setting of switching point SP and hysteresis HY

Window comparator in the flow measurement for OutA or OutD and in the temperature measurement for OutB

Function	NO (normally open)	NC (normally closed)
Switching function: – 2 switching points (SP.Lo, SP.Hi) TEACH mode[1)2)]: – 2 teach-in points (TP1, TP2) – TP1 = SP.Lo, TP2 = SP.Hi	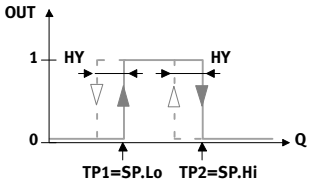	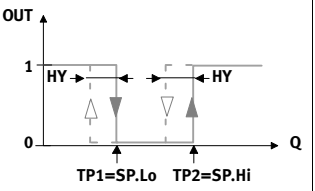

1) Only with flow measurement

2) SP.Lo = smaller value, SP.Hi = larger value, independent of the Teach sequence

Tab. 4 Window comparator: setting of switching points SP.Lo and SP.Hi and hysteresis HY

2.2.2 Colour change

A red colour change in the display can be set for OutA, OutB and OutD. As a result, the system status can be identified over a large distance.

The measured variable that first caused the colour change always appears in the display. The unit and the corresponding output OutA/OutC/OutD flash in the sub display. The display remains red until all switching outputs are in the blue status again.

2.2.3 Volume pulse

A threshold value for the volume can be set in the accumulated volume measurement. If the configured threshold value is reached, a switching impulse is emitted at the output OutC for an adjustable period of time. With each switching impulse, the volume measurement is started again (➔ Fig. 4).

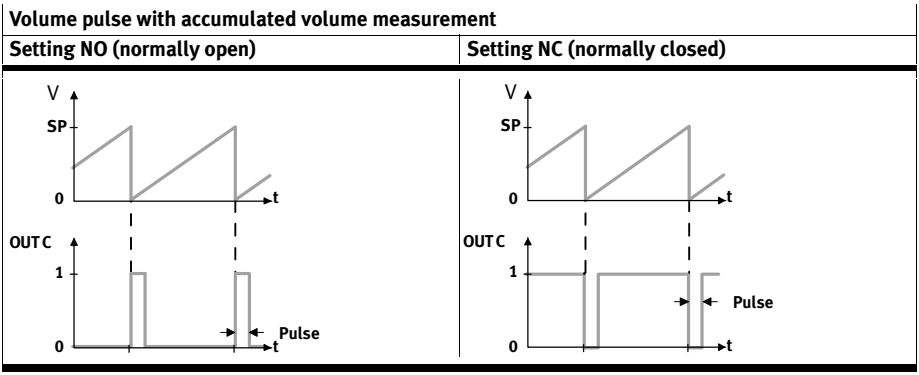

Fig. 4 Volume pulse

2.3 Analogue output

Analogue signal

The signal of the analogue output can be assigned the physical measured variables of flow rate or temperature. The physical measured value of flow rate is configured as standard.

Output signal

The analogue output can be operated either as a voltage output 0 ... 10 V or 1 ... 5 V or as a current output 4 ... 20 mA. The voltage output 0 ... 10 V is set at the factory.

Scaling of the analogue signal

The analogue output signal 0 ... 10 V, 1 ... 5 V or 4 ... 20 mA is assigned to the complete sensing range at the factory. If only part of the sensing range is to be used, the analogue value output can be scaled to this partial range.

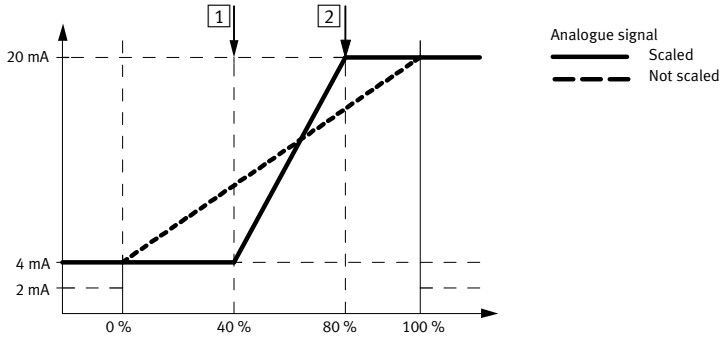

1 Starting point of the scaled sensing range (In.Lo)
2 End point of the scaled sensing range (In.Hi)

Fig. 5 Example: scaling of the analogue signal at the current output

2.4 Filter

The filter smoothes the flow measurement signal. Smoothing takes place in 8 steps and affects all outputs. The switching times of the flow-related switching outputs and the rise and fall time of the analogue output change.

2.5 Security code

A 4-digit numerical code can be set to protect the device settings from unauthorized access. The security code must be entered each time the settings are changed in the EDIT mode and the TEACH mode.

2.6 Minimum/maximum value

In the SHOW mode, the minimum values and the maximum values for the flow measurement or the temperature measurement are displayed and reset.

Switching off the operating voltage resets the minimum and maximum values.

3 Requirements for product use

- Only use the product in original status, without any unauthorised modifications.
- Only use the product if it is in an excellent technical status.
- Take into consideration the operating conditions at the location of use.
- Comply with all applicable national and international regulations.
- Do not use the product in combination with inflammable, caustic, vapour-emitting or other hazardous media.
- Foreign matter and other contaminants in the measurement medium can damage the product and cause incorrect measurements and malfunctions. Use media only in accordance with specifications (➔ 11 Technical data).
- Check the operating medium to determine compatibility with the materials it contacts.
- Observe the specifications on the product labelling.
- Remove all transport packaging. Recycle packaging material (exception: oil paper = residual waste).

Range of applications and certifications

In combination with the UL mark on the product, the information included in this section is also applicable for compliance with the certification requirements of Underwriters Laboratories Inc. (UL) for USA and Canada. Observe the following English-language remarks from UL:

UL approval information	
Product category code	QUYX, QUYX7
File number	E322346
Considered standards	UL 61010-1, CAN/CSA-C22.2 No.61010-1
UL mark	c UL us LISTED

Tab. 5

Only for connection to a NEC/CEC Class 2 supply.
Raccorder uniquement a un circuit NEC/CEC Classe 2.

Electrical and environmental ratings	
Input voltage	max. 30 V DC, Class 2
Input current	max. 0.26 A
Power	max. 8 W
Pressure differential	max. 1.2 MPa
Ambient temperature	max. 50 °C / 122 °F
Pollution degree	2
Humidity range	93 %
Only for indoor use.	
Altitude up to 2000m. Altitude up to 2000m or above 2000m if specified by the manufacturer.	

Tab. 6

Unit shall be supplied by a power source which complies with the requirements of a limited-energy circuit in accordance with IEC/EN/UL/CSA 61010-1 or a Limited Power Source (LPS) in accordance with IEC/EN/UL/CSA 60950-1 or IEC/EN/UL/CSA 62368-1 or a Class 2 circuit in accordance with NEC or CEC.

4 Installation

4.1 Inlet and outlet situation

The specified accuracies of the sensors are achieved if the inlet path and the outlet path at the sensor are sufficiently long and straight and have no disturbing geometries, such as edges, curves or the like.

The following conditions must be taken into account prior to installation:

	SFAW-32-...	SFAW-100-...
Internal diameter D of the sensor geometry	11 mm	19 mm
Min. internal diameter of inlet path	1.1 x D	1.05 x D
Typ. inlet path L	10 cm	
Min. outlet path	5 cm	

Tab. 7 Minimum requirements for fluid connection

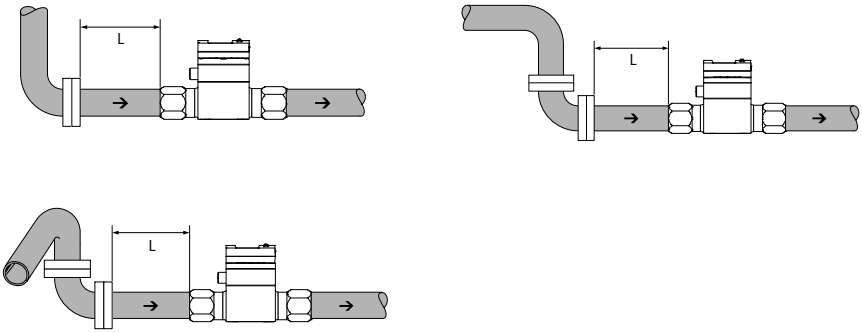

Fig. 6 Possible inlet situations

4.2 Mechanical installation

Any mounting position is allowed. The sensor can be installed without mounting accessories or with wall mounting. In both cases, remove the locking plate beforehand (Retaining plate screws = Allen key width across flats 2 mm).

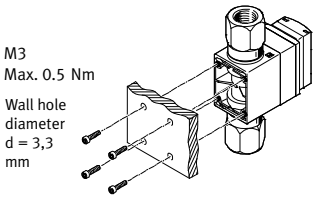

Fig. 7 Direct mounting:
hole pattern ➔ Fig. 15

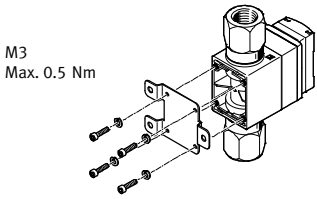

Fig. 8 Wall mounting (SFAW-...-W-...):
hole pattern ➔ Fig. 16

4.3 Fluid connection

The medium is fed in at fluid connector 1 and removed at fluid connector 2 (➔ Fig. 1).
Connect the sensor as follows:

- Mount supply line at fluid connector 1 and discharge line at fluid connector 2 of the sensor. When screwing in, do not jam the threads.

When making customer-specific fluid connectors, observe dimensional drawings (➔ Fig. 17).

Change fluid connector

- Remove locking plate
- Dismount fluid connector (➔ Fig. 9).
- Mount fluid connector (➔ Fig. 10).
- Mount retaining plate (Allen key screw M3, width across flats = 2 mm, max. tightening torque 0.5 Nm)

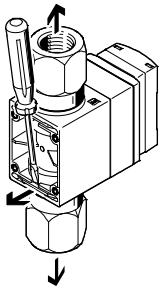

Fig. 9 Dismantling fluid connection

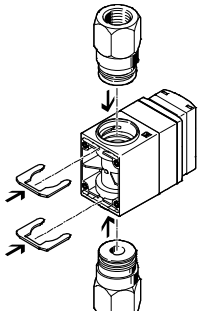

Fig. 10 Mounting fluid connection: Check that the O-ring is seated correctly.

4.4 Electrical installation

Warning
Use only power sources which guarantee reliable electrical isolation of the operating voltage in accordance with IEC/EN 60204-1. Consider also the general requirements for PELV circuits in accordance with IEC/EN 60204-1.

The switching outputs at pin 2 and pin 4 can be wired as PNP or NPN connections as needed.

- Pay attention to the wiring when configuring the switching outputs (➔ 5.4.4 Changing sensor settings).

- Connect sensor.
– Consider the maximum permissible line length: 30 m, with IO-Link 20 m.
– Consider the maximum tightening torque of the plug connector: 0.5 Nm.

Pin	Assignment[1)]	Wire colour[2)]	Plug connector
1	DC +24 V operating voltage	Brown (BN)	5-pin M12 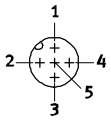
2	Switching output OutB or OutD or analogue output	White (WH)	
3	0 V	Blue (BU)	
4	Switching output OutA or OutC or IO-Link (C/Q line)	Black (BK)	
5	Analogue output or not assigned	Grey (GY)	

1) Observe signal structures (➔ Fig. 2 and Fig. 3).
2) When using the connecting cable from the electrical accessories (➔ 1.2 Key features)

Tab. 8 Pin allocation

Circuit diagrams	
SFAW-...-PNLK-PNVBA-...	SFAW-...-PNLK-PN-VBA-...
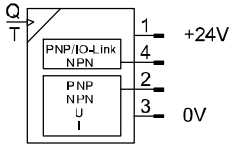	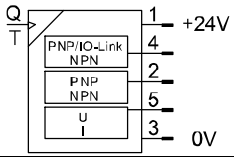

Tab. 9 Circuit diagrams

5 Commissioning

5.1 Symbols on the display

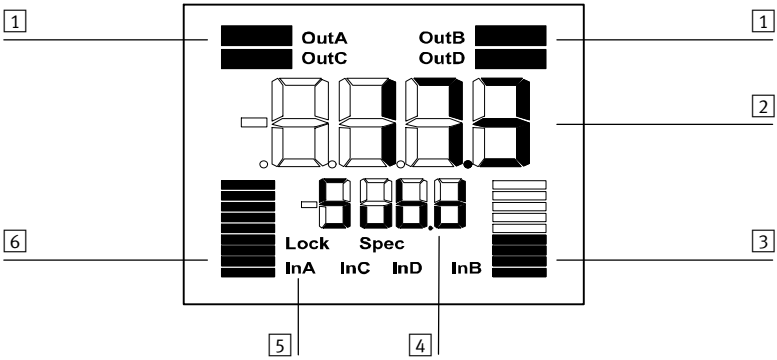

1 Output display
2 Main display (measurement value)
3 Bar graph for input signal InC or InD
4 Lower display (unit)
5 Status information/input display
6 Bar graph for input signal InA

Fig. 11 Display

Example for LCD display	Significance
Output display	
[OutA]	Switching output OutA selected
[OutA]	Switching output OutA set
[OutC]	Switching output OutC selected
[OutC]	Switching output OutC set
[OutB]	Switching output OutB selected
[OutB]	Switching output OutB set
[OutD]	Analogue output OutD selected
[OutD]	Switching output OutD set

Example for LCD display	Significance
Information / input display	
	Input signal InA: graphic display of the current measured value related to the maximum measured value of the measuring range
	Input signal InC: graphic display of the volume measurement
[InA]	Input signal InA (flow) selected
[InC]	Input signal InC (volume) selected
[InB]	Input signal InB (temperature) selected
[Lock]	Security code activated
[Spec]	Special menu activated

Tab. 10

Example for LCD display		Significance
Main display	Lower display	
Measured value indicator and unit in the RUN mode		
[17.3]	[l/Min]	Measured value indicator and unit
Menu for the switching outputs		
[Edit]	[Flow]	Edit menu for the switching outputs
	[Fctn]	Determination of the switching function: threshold value comparator
	[Fctn]	Determination of the switching function: window comparator
[18.0]	[SP]	Value of switching point (only for threshold value comparator)
[8.0]	[SP.Lo]	Value of lower switching point (only for window comparator)
[12.2]	[SP.Hi]	Value of upper switching point (only for window comparator)
[2.8]	[HY]	Hysteresis value
[NO]	[logic]	Switching characteristics of the switching outputs: [NO] = normally open, [NC] = normally closed
[bLUE]	[COLR]	Display colour: [bLUE] = Blue, colour change function deactivated [R.ON] = Red, if switching output set [R.OFF] = Red, if switching output not set
[200]	[PULS] / [MSEC]	Width of the volume pulse

Example for LCD display		Significance
Main display	**Lower display**	
Menu for the analogue output		
[l/Min]	[Flow] / [Unit]	Display unit for the flow measurement
[1_5V]	[Out]	Analogue output, switchable between [0_10V], [1_5V], [4_20MA]
[93.0]	[In.Hi] / [%]	Scaling of the analogue output: Set final value of the flow or temperature characteristics curve. (specification in % FS - full scale)
[3.1]	[In.Lo] / [%]	Scaling of the analogue output: Set starting value of the flow or temperature characteristics curve. (specification in % FS - full scale)
[Ltr]	[VOL] / [Unit]	Display unit for volume measurement
[°C]	[tEMP] / [Unit]	Display unit for temperature measurement
Menu for extreme and average values		
[5.1]	[MIN] / [l/Min]	Minimum measured flow rate since switch-on or the last reset
[30.8]	[MAX] / [l/Min]	Maximum measured flow rate since switch-on or the last reset
[20.2]	[MIN] / [°C]	Minimum measured temperature since switch-on or the last reset
[50.5]	[MAX] / [°C]	Maximum measured temperature since switch-on or the last reset
[20.8]	[AVER] / [l/Min]	Average of the flow measurement, filter time constant switchable between 650 ms, 1200 ms, 2500 ms
Menu for device settings		
[1200]	[Filt]	Value of the filter time constant for the flow signal
[10]	[Eco]	Economy mode: time after which the display background lighting is switched off
[PNP]	[bin] / [Out]	Shift of the switching outputs (binary) between PNP and NPN
[FLOW]	[bin] / [Pin4]	Switching of the switch signal (binary) at pin 4 between flow monitoring and volume pulse
[FLOW]	[bin] / [Pin2]	Switchover of the switching signal (binary) or the analogue output signal at pin 2 between flow and temperature monitoring
[FLOW]	[ANLG] / [Pin5]	Switchover of the analogue output signal at pin 5 between flow and temperature measurement
[OFF]	[Lock] / [Code]	Activation and determination of the security code
[OFF]	[MASt]	Activation of the IO-Link master function for replication of parameters

Tab. 11

5.2 Switch on sensor (RUN mode)

The RUN mode is the basic status of the flow sensor. The current values are displayed. The basic status can be optionally reached from other modes by:
– pressing Edit button for 3 seconds
– expiration of a monitoring time (timeout)

- Switch on the operating voltage.
  ➔ The sensor is in RUN mode.
  ➔ The signals active at the outputs are displayed (signal structure ➔ Fig. 2 and Fig. 3).

By pressing the A key or B key, the display can be switched between the measured variables flow rate, volume and temperature (➔ Fig. 12).

5.3 Displaying parameters (SHOW mode)

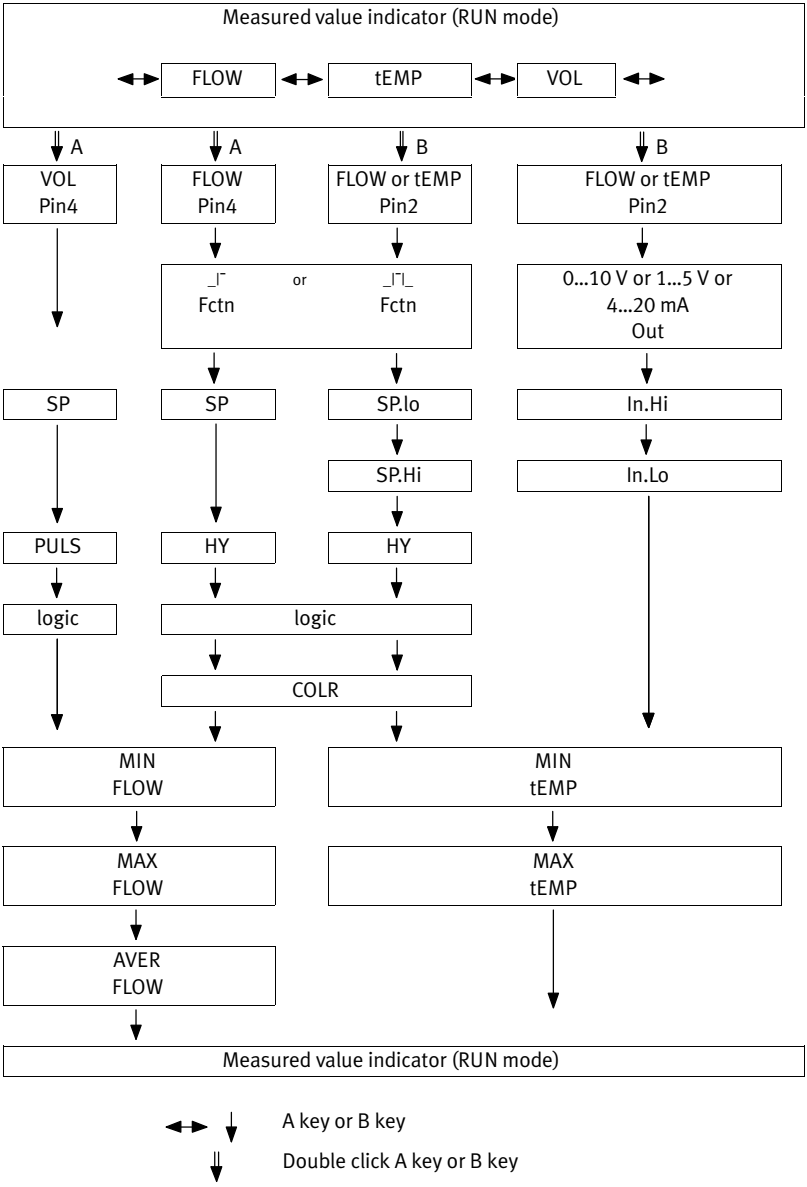

Fig. 12 Menu structure for SHOW mode

5.3.1 Start SHOW mode

Requirement: The sensor is ready for operation (RUN mode).

1. Click on A key or B key, depending on the output (➔ Fig. 12).
   ➔ The sensor is in the SHOW mode. The first setting is displayed.

Pressing the A key or B key again displays the other settings of the selected switching output.

2. Press A key or B key
   ➔ Switch to the RUN mode.

5.3.2 Display minimum/maximum value and reset

Requirement: The sensor is in the SHOW mode.

1. Press A key or B key several times, depending on the output (➔ Fig. 12).
   ➔ The minimum value is displayed. [MIN] / [l/Min] or [MIN] / [°C] flashes.

If no further keys are pressed, the display remains permanently (no timeout).

2. Press the Edit button.
   ➔ The minimum value is reset.
3. Press A key or B key.
   ➔ The maximum value is displayed. [MAX] / [l/Min] or [MAX] / [°C] flashes.
4. Press the Edit button.
   ➔ The maximum value is reset.
5. Press A key or B key.
   ➔ Change to display the average or to enter the RUN mode.

5.3.3 Display average and reverse related filter time constant

Requirement: The sensor is in the SHOW mode.

1. Press A key multiple times (➔ Fig. 12).
   ➔ The averaged flow rate value is displayed. [AVER] / [l/Min] flashes.

If no further keys are pressed, the display remains permanently (no timeout).

2. Press the Edit button.
   ➔ The value of the filter time constant is changed (650 ms, 1200 ms, 2500 ms).
3. Press A key.
   ➔ Switch to the RUN mode.

5.4 Configure sensor (EDIT mode)

Fig. 13 shows the complete menu structure. Some menu options or setting values are not applicable, depending on the product variant and the selected switching function.

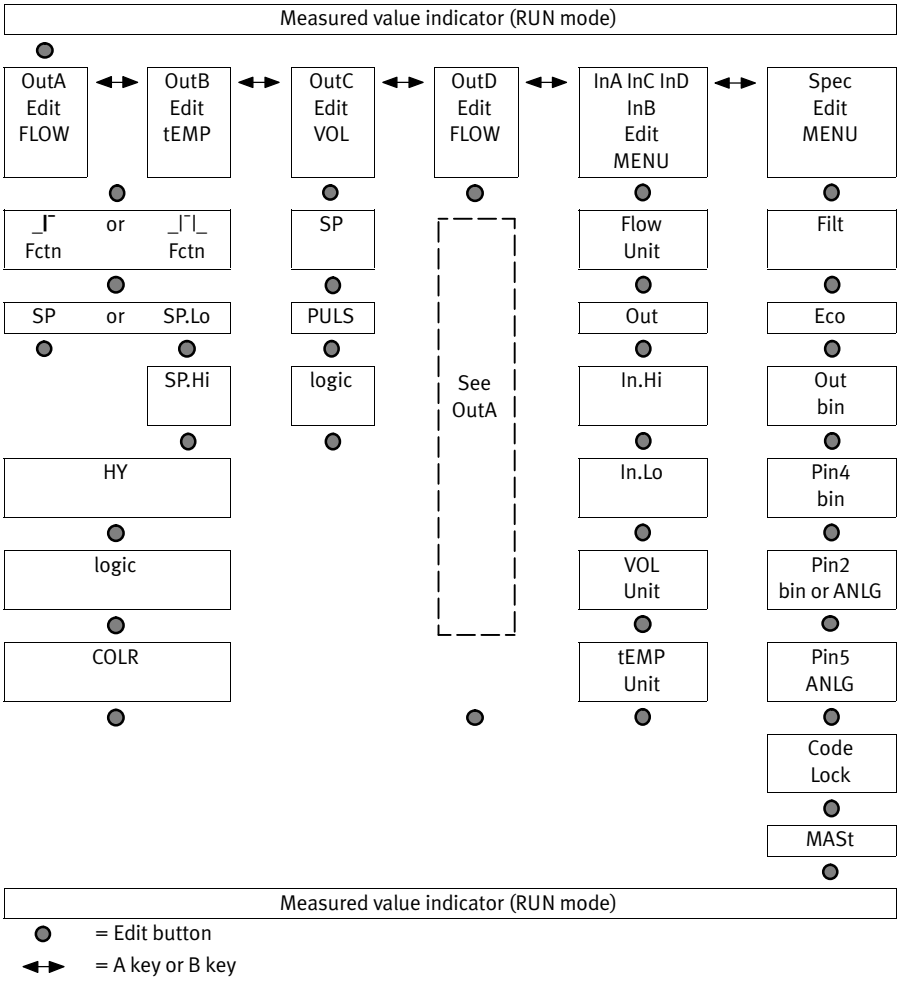

Fig. 13 Menu structure for the EDIT mode

Parameter[1)]	Adjustable values	Factory setting
[SP] with flow measurement	5...100 % full scale[2)]	60 % full scale[2)]
[SP.Lo] with flow measurement	5...99 % full scale[2)]	60 % full scale[2)]
[SP.Hi] with flow measurement	5.5...100 % full scale[2)]	70 % full scale[2)]
[HY] with flow measurement	0...90 % full scale[2)]	0.5 % full scale[2)]
[SP] with temperature measurement	1...90 % full scale	40 % full scale
[SP.Lo] with temperature measurement	1...89.5 % full scale	40 % full scale
[SP.Hi] with temperature measurement	1.5...90 % full scale	60 % full scale
[HY] with temperature measurement	0...80 % full scale	0.5 % full scale
[logic]	NO, NC	NO
[COLR]	bLUE, R.ON, R.OFF	bLUE
[SP] with volume measurement	➔ 11 Technical data	SFAW-32-...: 32,0 l SFAW-100-...: 100,0 l
[PULS]	10...1000 MSEC	100 MSEC
[FLOW] [Unit]	l/Min, l/h, CFM, GPM	l/Min
[Out]	0...10 V, 1...5 V, 4...20 MA	0...10 V
[In.Hi]	10...100 % Full Scale	100 % Full Scale
[In.Lo]	0...90 % Full Scale	0 % Full Scale
[VOL] [Unit]	Ltr, M^3 (m^3), CFt, GAL	Ltr
[tEMP] [Unit]	°C, °F	°C
[Filt]	100, 150, 300, 650, 1200, 2500, 5000, 10000 MSEC	150 MSEC
[Eco]	di.ON, 5, 10, 20, 40, 80, 160, 320, 640 s	di.ON
[bin] [Out]	PNP, NPN	PNP
[bin] [Pin4]	FLOW, VOL	FLOW
[bin] or [ANLG] [Pin2]	FLOW, tEMP	FLOW
[ANLG] [Pin5]	FLOW, tEMP	FLOW
[Lock] [Code]	OFF, 1...9999	OFF
[MASt]	OFF, ON	OFF

1) All parameters of the complete menu structure are listed. Some menu options or setting values are not applicable, depending on the product variant and the selected switching function.

2) The values refer to the respective measuring range.

Tab. 12 Adjustable values and factory setting

5.4.1 Enter the security code

Requirement: The sensor is ready for operation (RUN mode).

1. Press the Edit button.
   ➔ The EDIT mode is active.
   If the security code is activated: [Lock] flashes.
2. Enter security code with A key or B key.
3. Press the Edit button.
   ➔ [OutA] flashes.

5.4.2 Setting the switching characteristics of the switching outputs

Set flow or temperature monitoring

- The procedure for setting the flow monitoring at the switching signal OutA or switching signal OutD is the same. In the following, the procedure for the switching signal OutA is described.
- The temperature monitoring can only be set for the switching signal OutB.

Requirement: The sensor is in the EDIT mode. [OutA] flashes.

1. Press the Edit button.
   ➔ [_I¯] or [_I¯I_] is displayed. [Fctn] flashes.
2. Select the switching function with the A key or B key.
3. Press the Edit button.
   ➔ [SP] or [SP.Lo] flashes.
4. Set the value for the switching point with the A key or B key.
5. Press the Edit button.
   Only for window comparator switching function:
   ➔ [SP.Hi] flashes.
   - Set the value for the switching point with the A key or B key.
   - Press the Edit button.
   ➔ [HY] flashes.
6. Set the value for the hysteresis with the A key or B key.
7. Press the Edit button.
   ➔ [logic] flashes.
8. Select the switching element function with the A key or B key.
9. Press the Edit button.
   ➔ [COLR] flashes.
10. Select the setting for colour change with the A key or B key.
11. Press the Edit button.
    ➔ Switch to the RUN mode.

Set volume monitoring

- The volume monitoring can only be set for the switching signal OutC.
- The maximum pulse length depends on the size of the threshold value and is automatically limited.

Requirement: The sensor is in the EDIT mode. [OutA] flashes.

1. Select the switching signal [OutC] with the A key or B key.
2. Press the Edit button.
   ➔ [SP] flashes.
3. Set the value for the switching point with the A key or B key.
4. Press the Edit button.
   ➔ [PULS] flashes.
5. Select the pulse length with the A key or B key.
6. Press the Edit button.
   ➔ [logic] flashes.
7. Select the switching element function with the A key or B key.
8. Press the Edit button.
   ➔ Switch to the RUN mode.

5.4.3 Setting display units and analogue output

Requirement: The sensor is in the EDIT mode. [OutA] flashes.

1. Select [InA InC InD InB] with the A key or B key.
2. Press the Edit button.
   ➔ [FLOW] / [Unit] flashes.
3. Select the display unit for the flow measurement with the A key or B key.
4. Press the Edit button.
   ➔ [Out] flashes.
5. Select the output signal with the A key or B key.
6. Press the Edit button.
   ➔ [In.Hi] / [%] flashes.
7. Set the final value for scaling of the measuring range with the A key or B key.
8. Press the Edit button.
   ➔ [In.Lo] / [%] flashes.
9. Set the starting value for scaling of the measuring range with the A key or B key.
10. Press the Edit button.
    ➔ [VOL] / [Unit] flashes.
11. Select the display unit for the volume measurement with the A key or B key.
12. Press the Edit button.
    ➔ [tEMP] / [Unit] flashes.
13. Select the display unit for the temperature measurement with the A key or B key.
14. Press the Edit button.
    ➔ Switch to the RUN mode.

5.4.4 Changing sensor settings

Requirement: The sensor is in the EDIT mode. [OutA] flashes.

1. With A key or B key, select the special menu [SPEC].
2. Press the Edit button.
   ➔ [Filt] flashes.
3. With A key or B key, select the parameter or value.
4. Press the Edit button.
   ➔ The set value is saved.
   ➔ The next adjustable parameter flashes.
5. Repeat points 3 and 4 until all parameters are set (➔ Fig. 13 and Tab. 12).

5.4.5 Replicating parameters

Prerequisite:

– The configured sensor (master sensor) is ready for operation (RUN mode).
– Master sensor and device sensor have the same design regarding the parameters (same device ID).
– The master sensor is connected with the device sensor (➔ Fig. 14).
– Parameterisation of the device sensor must not be blocked via IO-Link.
– At the device sensor, the switching output at pin 4 is configured to PNP and is in an unswitched status.

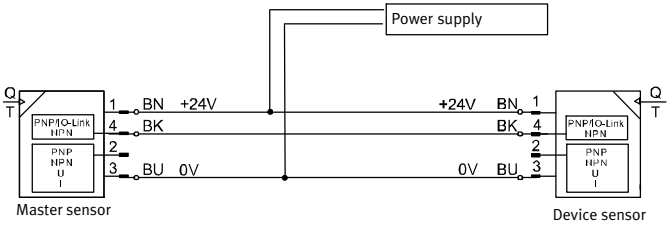

Fig. 14 Replicating parameters, using as an example SFAW-...PNLK-... / SFAW-...-PNVBA-...

1. Select special menu [Spec] at the master sensor.
2. Press the Edit button repeatedly until [MASt] appears.
3. With the A key or B key, select [ON].
4. Press the Edit button.
   ➔ [REPL] / [RedY] appears.
5. Press the A key or B key.
   ➔ [REPL] / [RUN] appears briefly.
   ➔ The parameters are transmitted to the device sensor.
   ➔ [REPL] / [RedY] appears.
   If an error occurs, an error message appears (➔ 9 Fault clearance).
6. Repeat point 5 if an additional sensor should be parameterised.
7. Press the Edit button.
   ➔ Switch to the RUN mode.

5.5 Teach switching points (TEACH mode)

The switching points for flow monitoring can be established in the TEACH mode
(➔ 2.2.1 Switching functions).

Before teaching, set the switching function in the EDIT mode
(➔ 5.4.2 Setting the switching characteristics of the switching outputs).

The procedure for teaching the switching signal OutA or switching signal OutD is in principle the same.
– OutA: Press A key
– OutD: Press B key
In the following, the procedure for the switching signal OutA is described.

Requirement: The sensor is ready for operation (RUN mode).
1. Create first flow (TP1).
2. Press the A key and also the Edit button.

If the security code is activated: [Lock] flashes.
3. Set the security code with the A key or B key.
4. Press the Edit button.
   ➔ [t-IN] flashes.
   ➔ The measured value will then be taken over as teach point (TP1).
5. Create second flow (TP2).
6. Press the A key and also the Edit button.
   ➔ The measured value will then be taken over as teach point (TP2).
   The switching point (SP) or switching points (SP.Lo and SP.Hi) become valid.
   Switch to the RUN mode.

5.6 Measuring volume manually (RECORDER mode)

Requirement: The sensor is ready for operation (RUN mode).
1. Press the A key and B key simultaneously.
   ➔ The current status of the measurement is displayed.
2. To start or stop the measurement, press the A key.
   To reset the measurement, press the B key.
3. To leave the RECORDER mode, press the A key and B key simultaneously.
   ➔ Switch to the RUN mode.

If the RECORDER mode is exited during a volume measurement, the measurement will continue in the background. If the operating voltage is switched off, the measurement is discontinued without the value being saved.

6 Operation

Restore factory settings

Restoring the factory settings causes the current settings to be lost.

1. Switch off the operating voltage.
2. Keep the A key and B key pressed down simultaneously.
3. Switch on the operating voltage.
4. Additionally press the Edit button.
   ➔ [Rsto PARM] appears. All parameters are reset to the factory settings (➔ Tab. 12).

7 Maintenance and care

Clean sensor housing as required

1. Switch off energy sources:
   – operating voltage
   – operating medium
2. Clean sensor from outside. Permissible cleaning agents include:
   – soap suds (max. +60 °C)
   – petroleum ether
   – non-abrasive agents

8 Disassembly

1. Switch off energy sources:
   – operating voltage
   – operating medium
2. Separate connections from the sensor.
3. Loosen the mountings.

If mounted into fixed piping, the sensor can be separated from the fluid connectors through removal of the clips on the back side (➔ 4.3 Fluid connection).

9 Fault clearance

Malfunction / display		Possible cause	Remedy
Menu	**Submenu**		
Settings cannot be edited; [Lock] appears.		Security code activated.	• Enter security code. • If the security code cannot be found, restore factory settings (➔ 6 Operation).
[Er01]	[FAIL]	Sensor defective.	• Replace sensor.
[Er02]	[ASIC]		
‹Value›	[Er08] / [FLOW]	Instability in the flow	• Secure laminary flow.
[----	[Er08] / [FLOW]	Instability in the flow or flow measuring range exceeded.	• Comply with laminary flow and flow measuring range.
‹Value› / [OVER]	[Er10] / [FLOW]	Flow measuring range exceeded.	• Comply with flow measuring range.
‹Value› / [UN]dR]	[Er11] / [tEMP]	Temperature measurement range of the operating medium fallen below.	• Comply with temperature measurement range.
‹Value› / [OVER]	[Er12] / [tEMP]	Temperature measurement range of the operating medium exceeded.	• Comply with temperature measurement range.
‹Value›	[Er17] / [SUPL]	Undervoltage	• Apply permissible operating voltage.
‹Value›	[Er20] / [tEMP]	Device temperature error	• Check operating temperature and ambient temperature. • Check load conditions. • Check circuitry. • Replace sensor.
‹Value› / [Pin4]	[Er21] / [SHRt]	Short circuit at the switching output pin 4	• Eliminate short circuit.
‹Value› / [Pin2]	[Er22] / [SHRt]	Short circuit at the switching output pin 2	• Eliminate short circuit.

Malfunction / display		Possible cause	Remedy
Menu	**Submenu**		
[Err] / [bUSY]		IO-Link operation: Pin 4 is actively switched in the device sensor.	• Check settings of the device sensor.
[Err] / [Id]		IO-Link operation: Device ID error	• When replicating, use sensors with the same parameters (same device ID).
[Err] / [COMM]		IO-Link communication error	• Check settings of the device sensor. • Check the C/Q line at pin 4.

Tab. 13 Fault clearance

In the same manner as the configurable colour change function (chap. 2.2.2), critical errors can additionally cause the [Err] error display to turn red.

10 Accessories

Designation	Type
Wall mounting	SAMH-FW-W
Fluid connection set	SASA-FW-A-...
Safety guard	SACC-PU-G
Clip	SAMH-FW-SB
Seal	SASF-FW-S-E

Tab. 14 Accessories

Further accessories ➔ www.festo.com/catalogue

11 Technical data

SFAW		-32	-100
General			
Approval certificate		RCM mark, c UL us - Listed (OL)	
CE mark (➔ Declaration of conformity)		In accordance with EU EMC directive	
Note on materials		RoHS-compliant	
Input signal/measuring element			
Measured variable		Flow, temperature	
Direction of flow		Unidirectional P1 ⟶ P2	
Measuring principle		Flow: vortex Temperature: PT1000	
Flow measuring range	[l/min]	1.8 … 32	5.0 … 100
Temperature measurement range	[°C]	0 … +90	
Operating pressure	[bar]	0 … 12; max. 12 bar at 40 °C, max. 6 bar at 90 °C	
Operating pressure	[MPa]	0 … 1,2, max. 1,2 MPa at 40 °C, max. 0,6 MPa at 90°C	
Operating medium[1)]		Liquid media, neutral liquids, water	
Temperature of medium	[°C]	0 … + 90	
Ambient temperature	[°C]	0 … + 50	
Nominal temperature	[°C]	23	
Output, general			
Accuracy of zero point[2)] Flow ≤ 50 % FS	[% FS]	± 2	
Accuracy of spread[2)] Flow ≥ 50 % FS	[% FS]	± 3	
Repetition accuracy, zero point[3)] Flow ≤ 50 % FS	[% FS]	± 0.5	
Repetition accuracy of spread[3)] Flow ≥ 50 % FS	[% FS]	± 1	
Accuracy of temperature	[°C]	± 2	
Temperature coefficient of spread	[% FS/K]	typ. ± 0.05 % FS/K	
Switching output			
Switching output		2 x PNP or 2 x NPN, switchable	
Switching function		Threshold value comparator or window comparator, freely progammable	
Switching element function		N/C contact or N/O contact, switchable	
Switch-on time	[ms]	400 with filter time constant 150 ms (adjustable)	
Switch-off time	[ms]	300 with filter time constant 150 ms (adjustable)	
Max. output current	[mA]	100	
Voltage drop	[V]	Max. 1.5	
Pull-down / pull-up resistor		PNP: integrated; NPN: not integrated	
Inductive protective circuit		On hand	

SFAW		-32	-100
Analogue output			
Characteristic curve for flow rate	[l/min.]	0 ... 32	0 ... 100
Temperature characteristics curve	[°C]	0 ... 100	
Output characteristic curve for current	[mA]	4 ... 20	
Output characteristic curve for voltage	[V]	0 ... 10 or 1 ... 5, adjustable	
Rise time	[ms]	900 with filter time constant 150 ms (adjustable)	
Max. load resistance at current output	[Ohm]	500	
Min. load resistance at the voltage output	[kOhm]	15	
Output, additional data			
Protection against short circuit		Yes	
Overload protection		Present	
Electronics			
Operating voltage range DC	[V]	18 ... 30	
Protection against incorrect polarity		For all electrical connections	
Electromechanical components			
Electrical connection		Straight plug, M12x1, 5-pin	
Max. connecting cable length	[m]	30, for IO-Link operation 20	
Mechanical components			
Mounting position		Any	
Housing material		Reinforced polyamide	
Materials in contact with the medium		ETFE, PA6T/6I reinforced, EPDM (perox.), stainless steel	
Keyboard material		TPE-O	
Plug housing material		Brass (nickel-plated)	
Display / operation			
Display type		Illuminated LCD, blue	
Displayable units		l/min, l/h, US gal/min, cfm, l, m^3, US gal, cft, °C, °F	
Setting range for volume pulse threshold value	[l]	0.1 ... 1999.9	
	[m^3]	0.01 ... 199.99	
	[cft]	0.01 ... 199.99	
	[US gal]	1 ... 19999	
Hysteresis setting range	[% FS]	0 ... 90	

SFAW		-32	-100
Immission / emission			
Storage temperature	[°C]	- 20 ... + 80	
Degree of protection		IP65	
Protection class		III	

1) Media with a kinematic viscosity ≤ 1.8 mm2/s [cSt]
2) Accuracy of flow rate value: ± 2 % FS for flow rate ≤ 50 % FS and ± 3 % of measured value for flow rate ≥ 50 % FS.
3) Repetition accuracy of flow rate value: < ± 0.5 % FS for flow rate ≤ 50 % FS < ± 1 % of measured value for flow rate ≥ 50 % FS.

Tab. 15 Technical data

IO-Link	SFAW-...-T-...	SFAW without temperature measurement
Protocol version	Device V 1.1	
Profiles	Smart sensor profile	
Function classes	Binary data channel (BDC) Process data variable (PDV) Identification Diagnostics Teach channel	
Communication mode	COM2 (38.4 kbd)	
Port class	A	
Process data width IN	5 bytes	3 bytes
Process data content IN	2 bit BDC (flow monitoring)	
	1 bit BDC (volume monitoring)	
	1 bit BDC (temperature monitoring)	
	14 bit PDV (flow measured value)	
	14 bit PDV (temperature measured value)	
Service data contents IN	32 bit PDV (volume measured value)	
IODD, IO-Link device description	➔ www.festo.com	

Tab. 16 IO-Link

12 Hole patterns and dimensional drawings

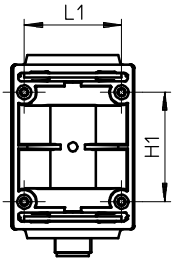

L1 = 32 mm
H1 = 36 mm

Fig. 15 Hole pattern for direct mounting

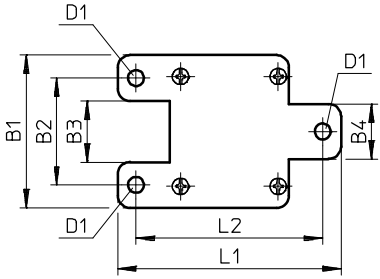

B1 = 50 mm
B2 = 35 mm
B3 = 20 mm
B4 = 18 mm

L1 = 73.2 mm
L2 = 61.2 mm

D1 = ⌀ 5.2 mm

Fig. 16 Wall mounting hole pattern

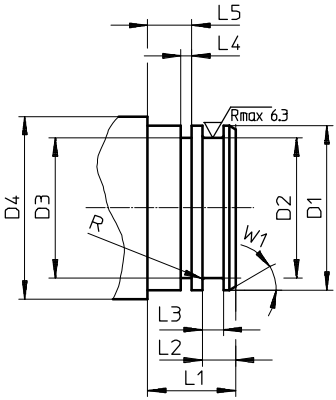

L1 = 14.5 mm + 0.1
L2 = 5.5 mm
L3 = 3.5 mm
L4 = 1.8 mm
L5 = 7.3 mm + 0.1

D1 = ⌀ 27 f8
D2 = ⌀ 23 - 0.1
D3 = ⌀ 23 ± 0.1
D4 = ⌀ 30

R = 0.3

W1 = 30°

Fig. 17 Dimensional drawing of customer-specific fluid connections

Copyright:
Festo SE & Co. KG
Ruiter Straße 82
73734 Esslingen
Germany

Phone:
+49 711 347-0

Fax:
+49 711 347-2144

E-mail:
service_international@festo.com

Internet:
www.festo.com