MCP1501

High-Precision Buffered Voltage Reference

Features

- Maximum Temperature Coefficient: 50 ppm/°C from -40°C to +125°C
- Initial Accuracy: 0.1%
- Operating Temperature Range: -40°C to +125°C
- Low Typical Operating Current: 140 µA
- Line Regulation: 50 ppm/V Maximum
- Load Regulation: 40 ppm/mA Maximum
- 8 Voltage Variants Available:
  - 1.024V
  - 1.250V
  - 1.800V
  - 2.048V
  - 2.500V
  - 3.000V
  - 3.300V
  - 4.096V
- Output Noise: 30 µVRMS, 0.1 Hz to 10 kHz (1.024V)
- AEC-Q100 Qualified (Automotive Applications)
  - Package qualified: 6-Lead SOT-23

Applications

- Precision Data Acquisition Systems
- High-Resolution Data Converters
- Medical Equipment Applications
- Industrial Controls
- Battery-Powered Devices
- Electric Vehicle Battery Management Systems

General Description

The MCP1501 is a buffered voltage reference capable of sinking and sourcing 20 mA of current. The voltage reference is a low-drift band gap based reference. The band gap uses chopper-based amplifiers, effectively reducing the drift to zero.

The MCP1501 is available in the following packages:

- 6-Lead SOT-23
  - This package is AEC-Q100 automotive qualified
- 8-Lead SOIC
- 8-Lead 2 mm x 2 mm WDFN

Package Types

MCP1501
6-Lead SOT-23

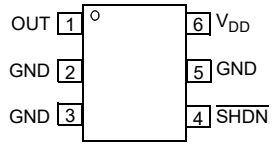

MCP1501
8-Lead SOIC

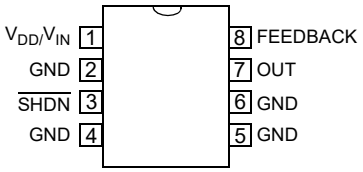

MCP1501
2x2 WDFN*

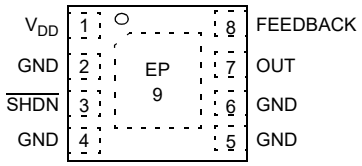

*Includes Exposed Thermal Pad (EP). See Table 1-1

© 2015-2021 Microchip Technology Inc.

BLOCK DIAGRAM

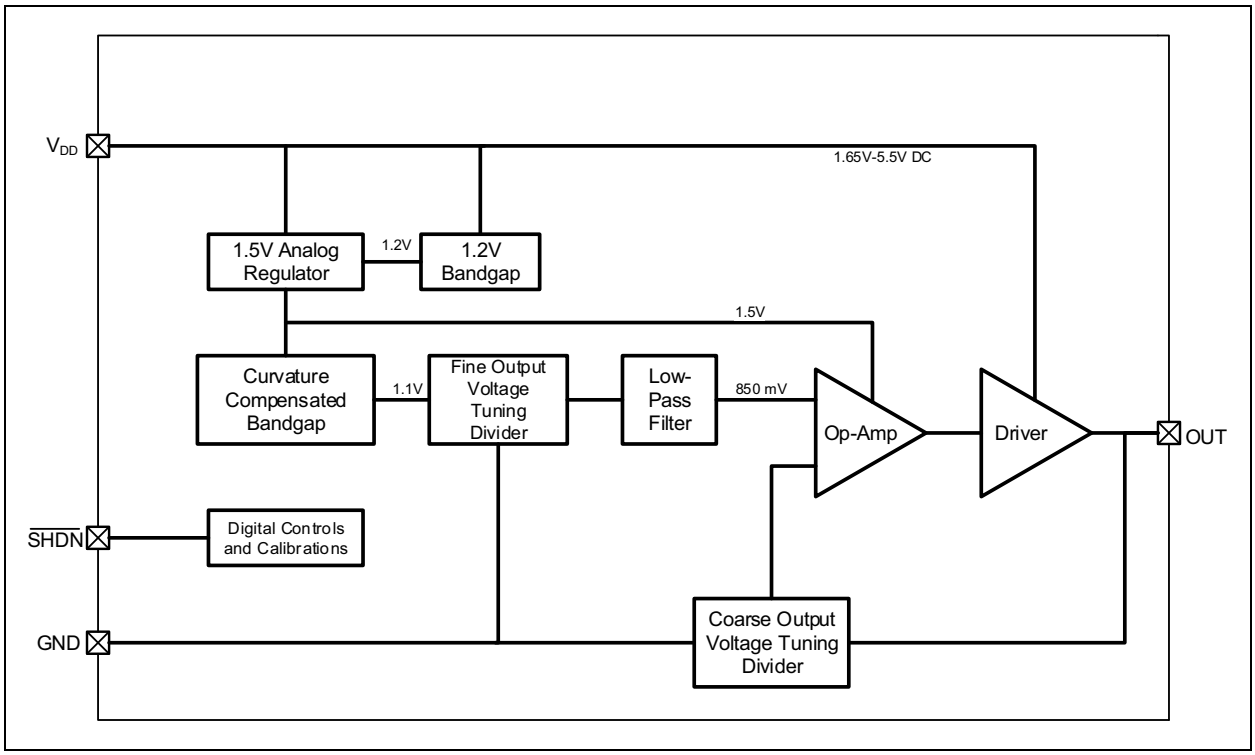

© 2015-2021 Microchip Technology Inc.

1.0 PIN FUNCTION TABLE

The pin functions are described in Table 1-1.

TABLE 1-1: PIN FUNCTION TABLE

SOT-23	SOIC	2 x 2 WDFN	Symbol	Function
1	7	7	OUT	V_{REF} Output
—	8	8	FEEDBACK	V_{REF} Feedback
2, 3, 5	2, 4, 5, 6	2, 4, 5, 6	GND	System Ground
4	3	3	$\overline{SHDN}$	Shutdown Pin Active Low
6	1	1	V_{DD}	Power Supply Input
—	—	9	EP	Exposed Thermal Pad

1.1 Buffered V_{REF} Output (OUT)

This is the Buffered Reference Output. On the WDFN and SOIC package, this should be connected to the FEEDBACK pin at the device. The output driver and the Feedback are tristated when in shutdown.

1.2 Buffered V_{REF} Feedback (FEEDBACK)

This is the buffer amplifier feedback pin. On the WDFN and SOIC package, this should be connected to the OUT pin at the device. This connection is internal on the SOT-23 package. Note that if there is routing impedance or IR-drop between the OUT and FEEDBACK pins, it is the FEEDBACK pin which accurately holds the output voltage. This can be used in an application to remove IR-drop effects on output voltage caused by the Printed Circuit Board (PCB) or interconnect resistance with a high-current load.

1.3 System Ground (GND)

This is the power supply return and should be connected to system ground.

1.4 Shutdown Pin ($\overline{SHDN}$)

This is a digital input that will place the device in Shutdown. The device should be allowed to power up before using this feature. This pin is active low. When this pin is low there will be no output.

Note:	Before using the Shutdown pin, the device should first be powered up. Once the device is fully powered up, the Shutdown pin can be used.

1.5 Power Supply Input (V_{DD})

This power pin also serves as the input voltage for the voltage reference. Refer to the Electrical Tables to determine minimum voltage, based on the device. It is recommended to connect a 0.1uF capacitor very close to the V_{DD} pin.

1.6 Exposed Thermal Pad (EP)

Not internally connected, but grounding is recommended. This can be soldered to the ground on the PCB.

© 2015-2021 Microchip Technology Inc.

NOTES:

© 2015-2021 Microchip Technology Inc.

2.0 ELECTRICAL CHARACTERISTICS

Absolute Maximum Ratings(†)

V_{DD} 5.5V
Maximum current into V_{DD} pin ..... 30 mA
Clamp current, I_K (V_{PIN} < 0 or V_{PIN} > V_{DD}) ..... ±20 mA
Maximum output current sunk by OUTPUT pin ..... 30 mA
Maximum output current sourced by OUTPUT pin ..... 30 mA
(HBM:CDM:MM) ..... (2 kV:1.5 kV:200V)

Note: **† Notice**: Stresses above those listed under "Absolute Maximum Ratings" may cause permanent damage to the device. This is a stress rating only and functional operation of the device at those or any other conditions above those indicated in the operation listings of this specification is not implied. Exposure above maximum rating conditions for extended periods may affect device reliability.

TABLE 2-1: DC CHARACTERISTICS

Electrical Characteristics: Unless otherwise specified, $V_{DD(MIN)} \le V_{DD} \le 5.5V$ at $-40°C \le T_A \le +125°C$.

Characteristic		Sym.	Min.	Typ.	Max.	Units	Conditions
Supply Voltage		V_{DD}	1.65	—	5.5	V	MCP1501-10
		V_{DD}	1.65	—	5.5	V	MCP1501-12
		V_{DD}	2.0	—	5.5	V	MCP1501-18
		V_{DD}	2.25	—	5.5	V	MCP1501-20
		V_{DD}	2.70	—	5.5	V	MCP1501-25
		V_{DD}	3.2	—	5.5	V	MCP1501-30
		V_{DD}	3.5	—	5.5	V	MCP1501-33
		V_{DD}	4.3	—	5.5	V	MCP1501-40
Power on Reset Release Voltage (Note 1)		V_{POR}	—	1.45	—	V	
Power on Reset Rearm Voltage (Note 2)		—	—	0.8	—	V	
Output Voltage	MCP1501-10	V_{OUT}	1.0230	1.0240	1.0250	V	Temperature at +25°C
	MCP1501-12		1.2488	1.2500	1.2513	V	
	MCP1501-18		1.7982	1.800	1.8018	V	
	MCP1501-20		2.0460	2.0480	2.0500	V	
	MCP1501-25		2.4975	2.500	2.5025	V	
	MCP1501-30		2.9970	3.000	3.0030	V	
	MCP1501-33		3.2967	3.300	3.3033	V	
	MCP1501-40		4.0919	4.0960	4.1001	V	
Temperature Coefficient	MCP1501-XX	T_C	—	10	50	ppm/°C	
Line Regulation		$\Delta V_{OUT}/\Delta V_{IN}$	—	5	50	ppm/V	

Note 1: On a rising V_{DD}, the voltage at which with device internal reset will get released.
2: On dropping V_{DD}, the voltage at which the internal reset circuit will reset. On the dropping V_{DD}, it is recommended to bring the V_{DD} below this voltage to get a proper reset.
3: Before using the $\overline{SHDN}$ pin, the device should first be powered up. Once the device is fully powered up, the Shutdown pin can be used.
4: µVPP is six times the value of the µVRMS.

TABLE 2-1: DC CHARACTERISTICS (CONTINUED)

Electrical Characteristics: Unless otherwise specified, $V_{DD(MIN)} \le V_{DD} \le 5.5V$ at –40°C ≤ T_A ≤ +125°C.							
Characteristic		**Sym.**	**Min.**	**Typ.**	**Max.**	**Units**	**Conditions**
Load Regulation		$\Delta V_{OUT} / \Delta I_{OUT}$	—	10 ppm – sink	40 ppm – sink	ppm/mA	-5 mA < I_{LOAD}
Load Regulation		$\Delta V_{OUT} / \Delta I_{OUT}$	—	15 ppm – source	70 ppm – source	ppm/mA	I_{LOAD}< +5 mA
Dropout Voltage		V_{DO}	—	—	200	mV	-5 mA < I_{LOAD} < +5 mA
Power Supply Rejection Ratio		PSRR		94		dB	All device options, V_{IN} = 5.5V, 60 Hz at 100 mV_{P-P}
Shutdown (**Note 3**)		V_{IL}		1.35		V	V_{IN} = 5.5V Refer to **Section 1.4 "Shutdown Pin (SHDN)"**
		V_{IH}		3.80		V	
Output Voltage Hysteresis		ΔV_{OUT_HYST}		300 µV			Refer to **Section 2.1.9 "Output Voltage Hysteresis"** for additional details on testing conditions.
Output Noise (**Note 4**)	MCP1501-10	e_N	—	18	—	µVPP	0.1 Hz to 10 Hz, T_A = +25°C
			—	30	—	µVRMS	0.1 Hz to 10 kHz, T_A = +25°C
	MCP1501-40	e_N	—	57	—	µVPP	0.1 Hz to 10 Hz, T_A = +25°C
			—	97	—	µVRMS	0.1 Hz to 10 kHz, T_A = +25°C
Maximum Load Current		I_{LOAD}	—	±20	—	mA	T_A = +25°C All device options.
Supply Current		I_{DD}	—	140	550	µA	No Load
			—	—	350		No Load, T_A = +25°C
Shutdown Current		I_{SHDN}		205		nA	T_A = +25°C All device options.

Note 1: On a rising V_{DD}, the voltage at which with device internal reset will get released.

2: On dropping V_{DD}, the voltage at which the internal reset circuit will reset. On the dropping V_{DD}, it is recommended to bring the V_{DD} below this voltage to get a proper reset.

3: Before using the $\overline{SHDN}$ pin, the device should first be powered up. Once the device is fully powered up, the Shutdown pin can be used.

4: µVPP is six times the value of the µVRMS.

TABLE 2-2: TEMPERATURE SPECIFICATIONS

Electrical Specifications: Unless otherwise indicated, all parameters apply at V_{DD} = $V_{DD(MIN)}$ to 5.5V.						
Parameters	**Sym.**	**Min.**	**Typ.**	**Max.**	**Units**	**Conditions**
Temperature Ranges						
Operating Temperature Range	T_A	–40	—	+125	°C	
Storage Temperature Range	T_A	–65	—	+150	°C	
Thermal Package Resistance						
Thermal Resistance for SOT-23-6	θ_{JA}	—	+190.5	—	°C/W	
Thermal Resistance for SOIC-8	θ_{JA}	—	+149.5	—	°C/W	
Thermal Resistance for DFN-8	θ_{JA}	—	+141.3	—	°C/W	

© 2015-2021 Microchip Technology Inc.

2.1 Terminology

2.1.1 OUTPUT VOLTAGE

Output voltage is the reference voltage that is available on the OUT pin.

2.1.2 INPUT VOLTAGE

The input voltage (V_{IN}) is the range of voltage that can be applied to the V_{DD} pin and still have the device produce the designated output voltage on the OUT pin.

2.1.3 TEMPERATURE COEFFICIENT (T_C)

The output temperature coefficient or voltage drift is a measure of how much the output voltage will vary from its initial value with changes in ambient temperature. The value specified in the electrical specifications is measured as shown in Equation 2-1.

EQUATION 2-1: TC_{OUTPUT} CALCULATION

$$Tc = \frac{V_{OUT(MAX)} - V_{OUT(MIN)}}{\Delta T \times V_{OUT(NOM)}} \times 10^6 \, ppm/°C$$

Where:

$V_{OUT(MAX)}$	=	Maximum output voltage over the temperature range
$V_{OUT(MIN)}$	=	Minimum output voltage over the temperature range
$V_{OUT(NOM)}$	=	Average output voltage over the temperature range
ΔT	=	Temperature range over which the data was collected

2.1.4 DROPOUT VOLTAGE

The dropout voltage is defined as the voltage difference between V_{DD} and V_{OUT} under 5 mA load.

2.1.5 LINE REGULATION

An ideal voltage reference will maintain a constant output voltage regardless of any changes to the input voltage. However, when real devices are considered, a small error may be measured on the output when an input voltage change occurs.

Line regulation is defined as the change in output voltage (ΔV_{OUT}) as a function of a change in input voltage (ΔV_{IN}), and expressed as a percentage, as shown in Equation 2-2.

EQUATION 2-2:

$$\frac{\Delta V_{OUT}}{\Delta V_{IN}} \times 100\% = \%\ Line\ Regulation$$

Line regulation may also be expressed as %/V or in ppm/V, as shown in Equation 2-3 and Equation 2-4, respectively.

EQUATION 2-3:

$$\frac{\left(\frac{\Delta V_{OUT}}{V_{OUT(NOM)}}\right)}{\Delta V_{IN}} \times 100\% = \frac{\%}{V}\ Line\ Regulation$$

EQUATION 2-4:

$$\frac{\left(\frac{\Delta V_{OUT}}{V_{OUT(NOM)}}\right)}{\Delta V_{IN}} \times 10^6 = \frac{ppm}{V}\ Line\ Regulation$$

As an example, if the MCP1501-20 is implemented in a design and a 2 µV change in output voltage is measured from a 250 mV change on the input, then the error in percent, ppm, percent/volt, and ppm/volt, as shown in Equation 2-5 – Equation 2-6.

EQUATION 2-5:

$$\left(\frac{\Delta V_{OUT}}{\Delta V_{IN}} \times 100\%\right) \times \left(\frac{2\ \mu V}{250\ mV} \times 100\%\right) = .0008\%$$

EQUATION 2-6:

$$\frac{\Delta V_{OUT}}{\Delta V_{IN}} \times 10^6 = \left(\frac{\left(\frac{2\ \mu V}{2.048 V}\right)}{250\ mV}\right) \times 10^6 = 3.90625\ \frac{ppm}{V}$$

2.1.6 LOAD REGULATION

An ideal voltage reference will maintain the specified output voltage regardless of the load's current demand. However, real devices experience a small error voltage that deviates from the specified output voltage when a load is present.

Load regulation is defined as the voltage difference when under no load (V_{OUT} @ $I_{OUT|0}$) and under maximum load (V_{OUT} @ $I_{OUT|MAX}$), and is expressed as a percentage, as shown in Equation 2-7.

EQUATION 2-7:

$$\frac{V_{OUT}\ @\ I_{OUT|0} - V_{OUT}\ @\ I_{OUT|MAX}}{V_{OUT}\ @\ I_{OUT|0}} \times 100\% = \%\ Load\ Regulation$$

Similar to line regulation, load regulation may also be expressed as %/mA or in ppm/mA as shown in Equation 2-8 and Equation 2-9, respectively.

EQUATION 2-8:

$$\frac{\left(\frac{\Delta V_{OUT}}{V_{OUT(NOM)}}\right)}{\Delta I_{OUT}} \times 100\% = \frac{\%}{mA}\ Load\ Regulation$$

EQUATION 2-9:

$$\frac{\left(\frac{\Delta V_{OUT}}{V_{OUT(NOM)}}\right)}{\Delta I_{OUT}} \times 10^6 = \frac{ppm}{mA}\ Load\ Regulation$$

As an example, if the MCP1501-20 is implemented in a design and a 10 µV change in output voltage is measured from a 2 mA change on the input, then the error in percent, ppm, ppm/output, as shown in Equation 2-10 – Equation 2-11.

EQUATION 2-10:

$$\frac{2.048V - 2.04799V}{2.04799V} \times 100\% = .0004882\%$$

EQUATION 2-11:

$$\frac{\left(\frac{\Delta V_{OUT}}{V_{OUT(NOM)}}\right)}{\Delta I_{OUT}} \times 10^6 = \left(\frac{\left(\frac{10\ \mu V}{2.048V}\right)}{2\ mA}\right) \times 10^6 = 2.441\ \frac{ppm}{mA}$$

2.1.7 POWER SUPPLY REJECTION RATIO

Power supply rejection ratio (PSRR) is a measure of the change in output voltage (ΔV_{OUT}) relative to the change in input voltage (ΔV_{IN}) over frequency.

2.1.8 LONG-TERM DRIFT

The long-term output stability is measured by exposing the devices to an ambient temperature of +25°C, as shown in Figure 3-14.

2.1.9 OUTPUT VOLTAGE HYSTERESIS

The output voltage hysteresis is a measure of the output voltage error after the powered devices are cycled over the entire operating temperature range. The amount of hysteresis can be quantified by measuring the change in the +25°C output voltage after temperature excursions from +25°C to +125°C to +25°C, and also from +25°C to –40°C to +25°C.

2.1.10 LAYOUT CONSIDERATION FOR LOAD REGULATION

For applications which require high currents and/or highly variable currents, the PCB layout is important for minimizing the Load Coefficient (variation in output voltage vs load current) of the device. Of particular importance is the grounding of the device to a large ground plane with good thermal mass. The MCP1501 should not be placed on a small daughter card or connected to ground via long traces or single vias if Load Coefficient is to be optimized; the additional power dissipation caused by the high load current will cause a small change in the output voltage due to self-heating of the device.

For systems with high ground currents, variations in the local ground can also be a source of Load Coefficient. These are usually solved by ensuring the local ground for the device is shared with the point of load. In some cases, it may be necessary to ensure

© 2015-2021 Microchip Technology Inc.

the device ground is specifically kelvin-sourced from the point of load such that zero IR drop from unassociated circuitry is seen on the device output voltage.

Additionally, for the SOIC-8 and WDFN-8 package, there are both OUTPUT and FEEDBACK pins available. If these pins are shorted on the PCB adjacent to the device, then any trace impedance between the device and the load will cause a small voltage drop. These pins can be routed separately and connected near the point of load to reduce or eliminate routing-related voltage drop in a system.

NOTES:

© 2015-2021 Microchip Technology Inc.

3.0 TYPICAL OPERATING CURVES

Note: The graphs and tables provided following this note are a statistical summary based on a limited number of samples and are provided for informational purposes only. The performance characteristics listed herein are not tested or guaranteed. In some graphs or tables, the data presented may be outside the specified operating range (e.g., outside specified power supply range) and therefore outside the warranted range.

Note: Unless otherwise specified, maximum values are: $V_{DD(MIN)} \leq V_{DD} \leq 5.5V$ at $T_A = +25°C$.

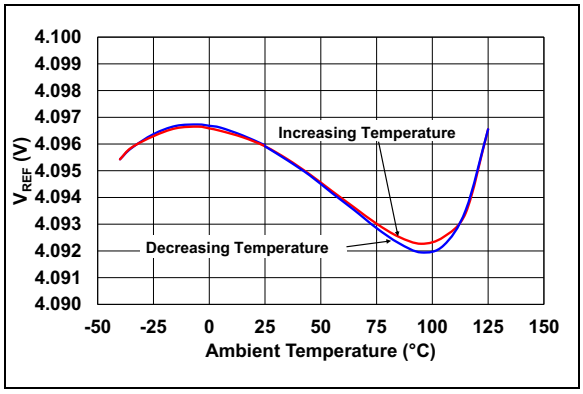

FIGURE 3-1: *V_{OUT} vs. Temperature, No Load, 4.096V Option.*

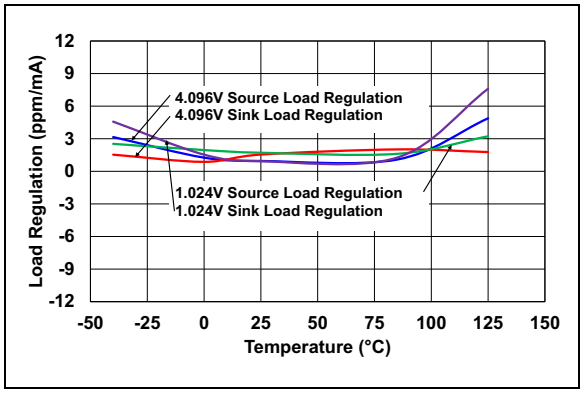

FIGURE 3-4: *Load Regulation vs. Temperature.*

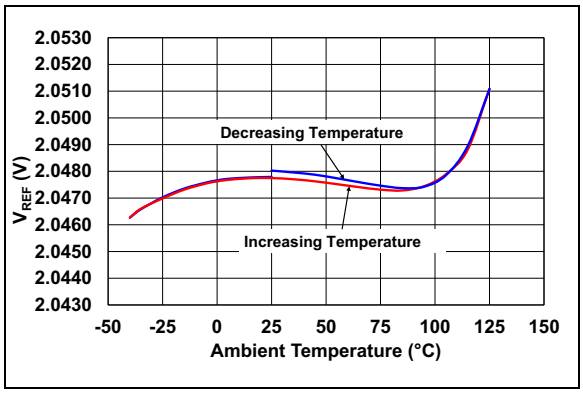

FIGURE 3-2: *V_{OUT} vs. Temperature, No Load, 2.084V Option.*

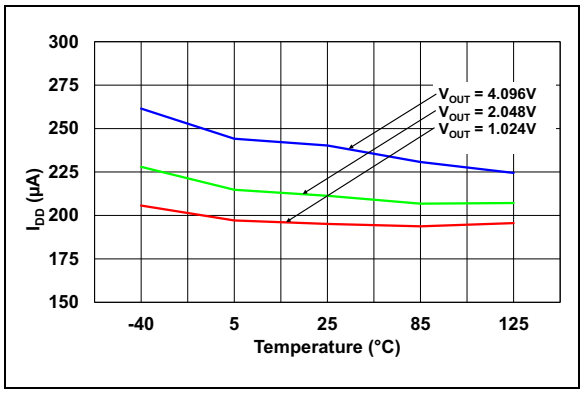

FIGURE 3-5: *I_{DD} vs. Temperature.*

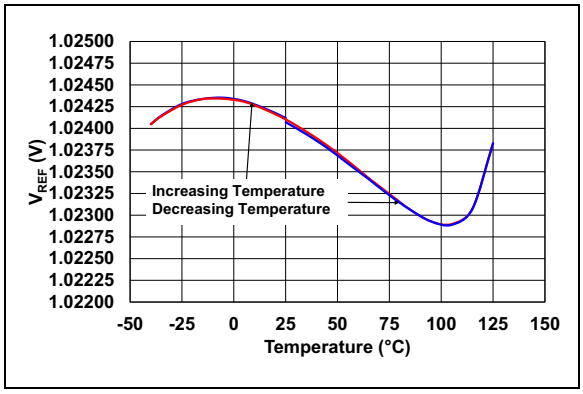

FIGURE 3-3: *V_{OUT} vs. Temperature, No Load, 1.024V Option.*

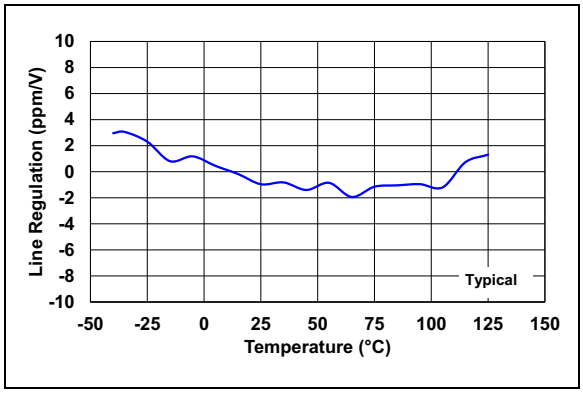

FIGURE 3-6: *MCP1501 - Line Regulation vs. Temperature.*

Note: Unless otherwise specified, maximum values are: $V_{DD(MIN)} \leq V_{DD} \leq 5.5V$ at T_A = +25°C.

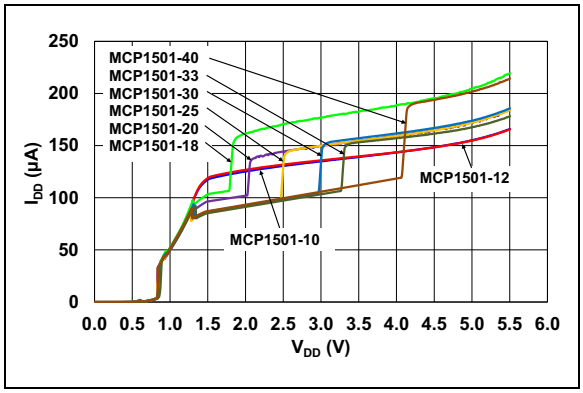

FIGURE 3-7: *I_{DD} vs. V_{DD} for All Options.*

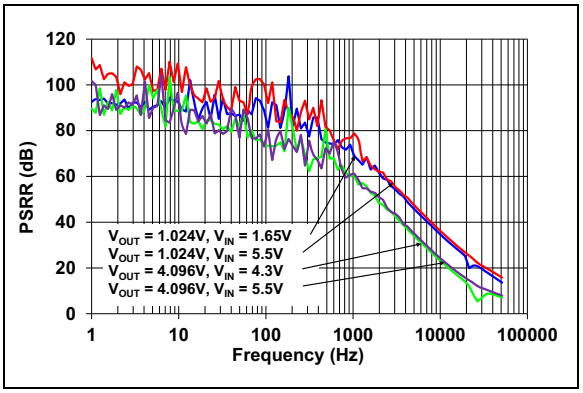

FIGURE 3-10: *PSRR vs. Frequency, 1 kΩ Load, T_A = +25°C.*

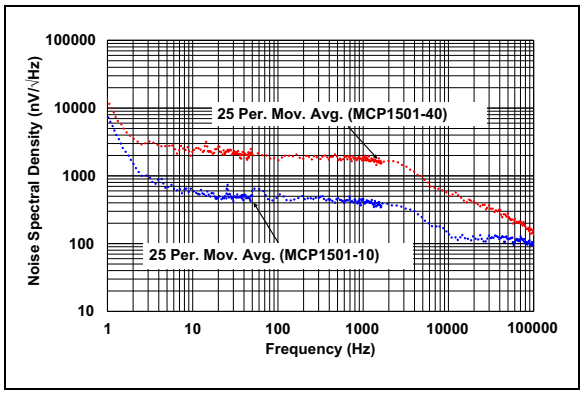

FIGURE 3-8: *Noise vs. Frequency, No Load, T_A = +25°C.*

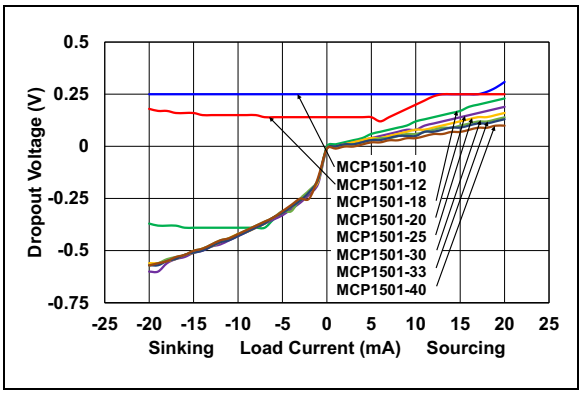

FIGURE 3-11: *Dropout Voltage vs. Load, T_A = +25°C.*

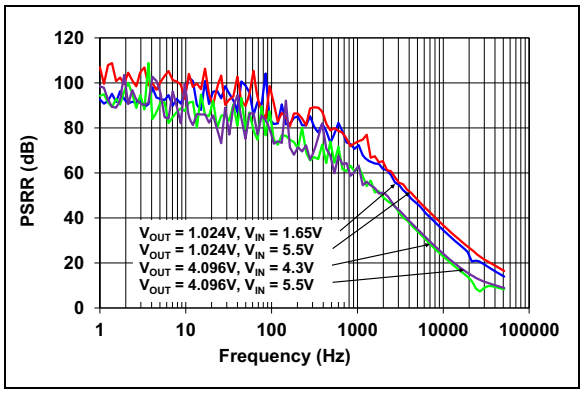

FIGURE 3-9: *PSRR vs. Frequency, No Load, T_A = +25°C.*

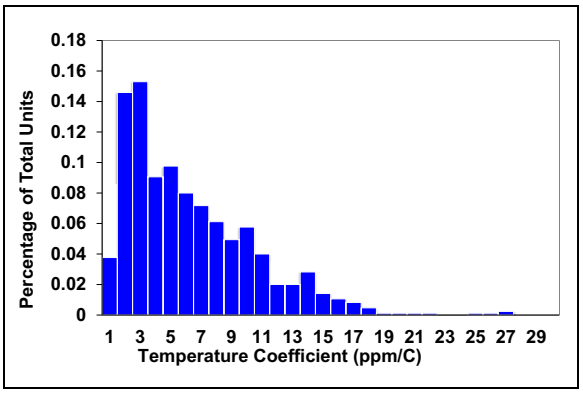

FIGURE 3-12: *Tempco Distribution, No Load, T_A = +25°C, V_{DD} = 2.7V, 50 Units.*

© 2015-2021 Microchip Technology Inc.

Note: Unless otherwise specified, maximum values are: $V_{DD(MIN)} \leq V_{DD} \leq 5.5V$ at $T_A = +25°C$.

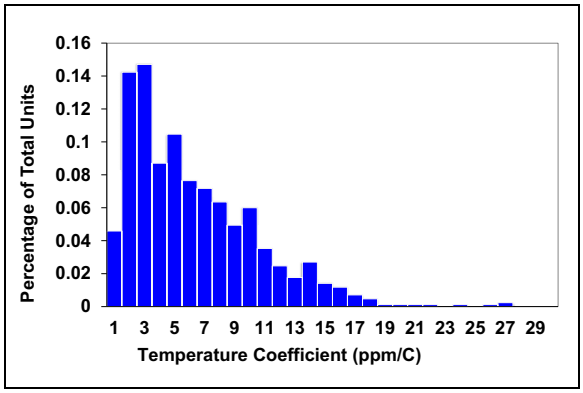

FIGURE 3-13: *Tempco Distribution, No Load, T_A = +25°C, V_{DD} = 5.5V, 50 Units.*

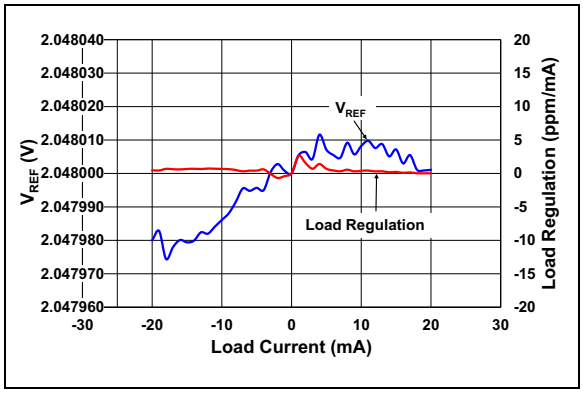

FIGURE 3-16: *MCP150X-20 V_{REF} and Load Regulation vs. Load Current.*

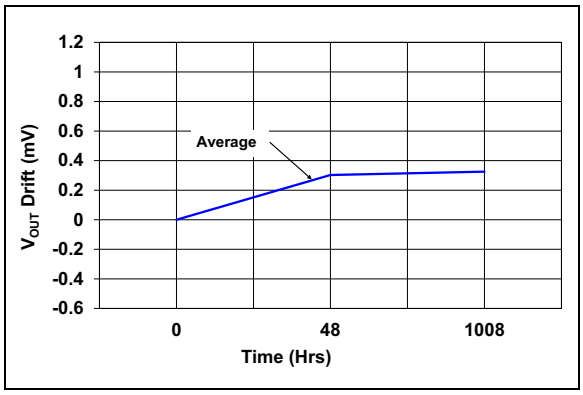

FIGURE 3-14: *V_{OUT} Drift vs. Time, T_A = +25°C, No Load, 800 Units.*

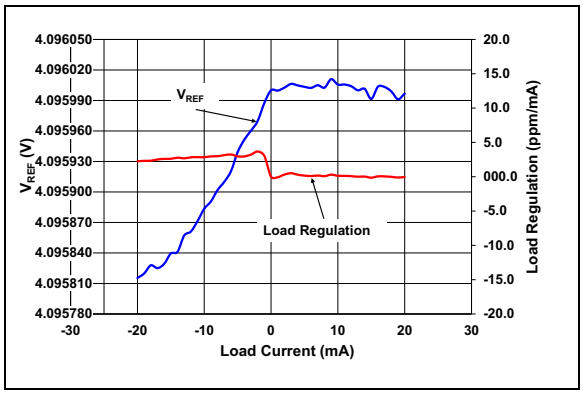

FIGURE 3-17: *MCP150X-40 V_{REF} and Load Regulation vs. Load Current.*

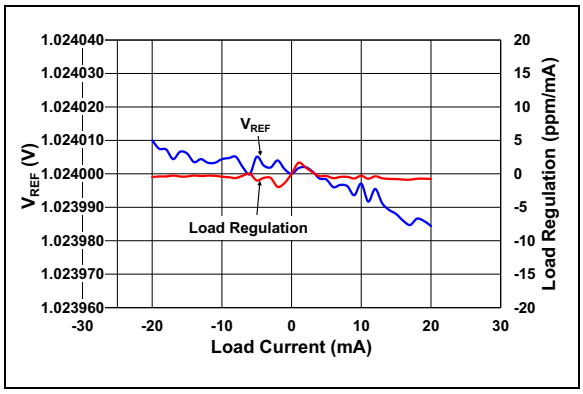

FIGURE 3-15: *MCP150X-10 V_{REF} and Load Regulation vs. Load Current.*

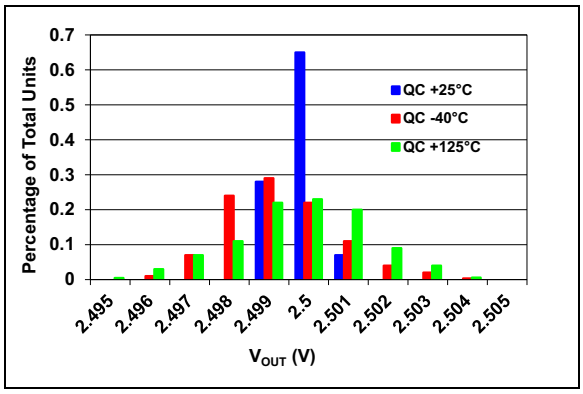

FIGURE 3-18: *V_{OUT} at V_{DDMIN}, V_{DD} = 2.7V, 800 Units, 2.5V Option, No Load.*

Note: Unless otherwise specified, maximum values are: $V_{DD(MIN)} \leq V_{DD} \leq 5.5V$ at $T_A = +25°C$.

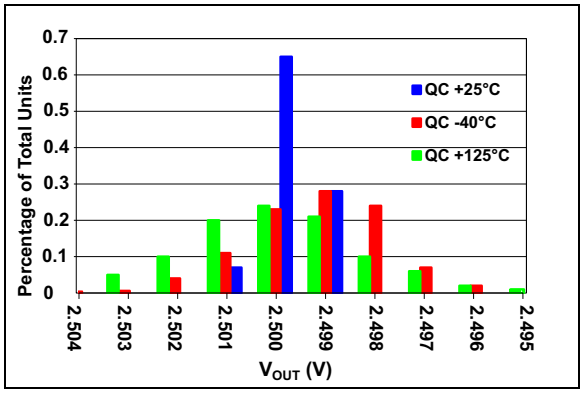

FIGURE 3-19: *V_{OUT} Distribution at V_{DDMAX}, V_{DD} = 5.5V, 800 Units, 2.5V Option, No Load.*

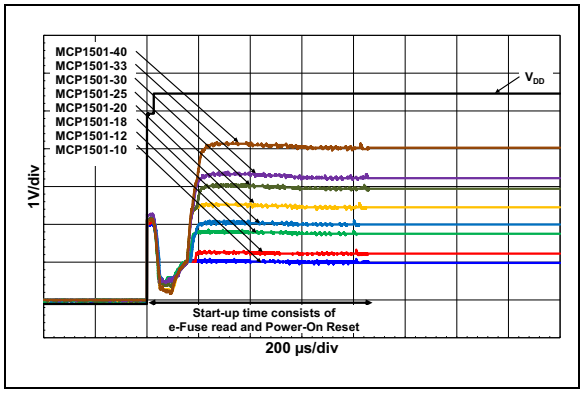

FIGURE 3-20: *Fast Ramp Start-Up at 25°C for All Options.*

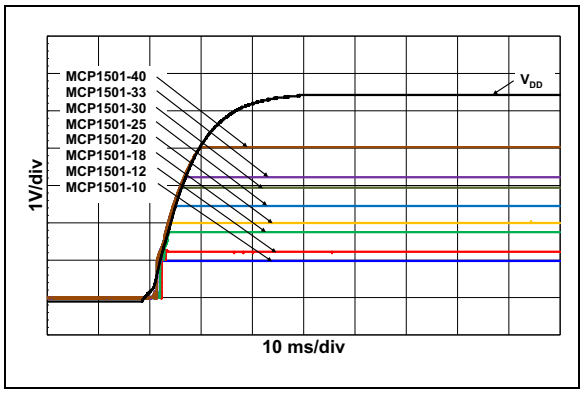

FIGURE 3-21: *Slow Ramp Start-Up at 25°C for All Options.*

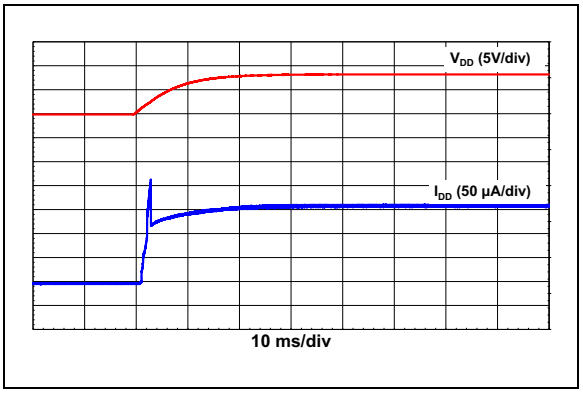

FIGURE 3-22: *I_{DD} Turn On Transient Response.*

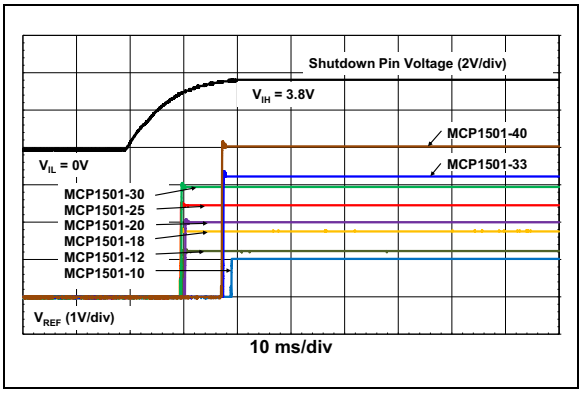

FIGURE 3-23: *Shutdown Low to High Slow Ramp Turn On Transient Response @ 25°C for All Options.*

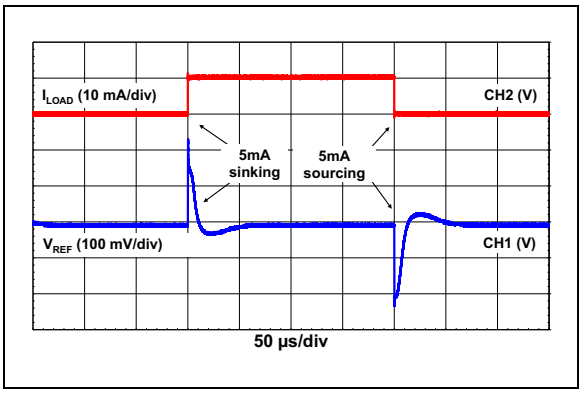

FIGURE 3-24: *Load Regulation Transient Response @ 25°C for All Options.*

© 2015-2021 Microchip Technology Inc.

Note: Unless otherwise specified, maximum values are: $V_{DD(MIN)} \leq V_{DD} \leq 5.5V$ at $T_A = +25°C$.

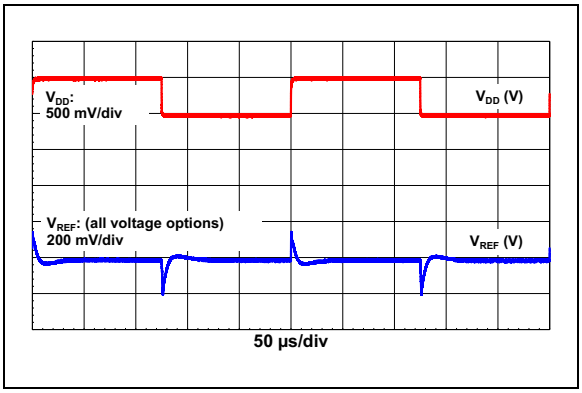

FIGURE 3-25: *Line Regulation Transient Response @ 25°C for All Options.*

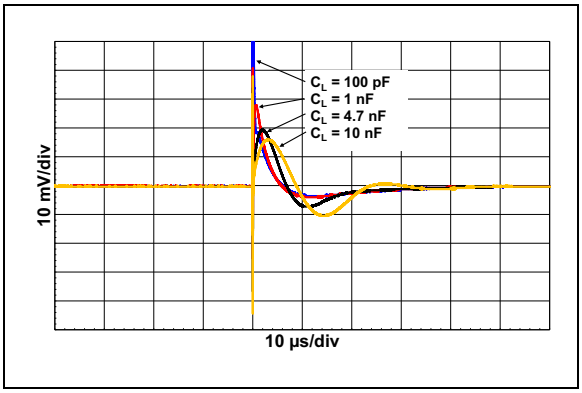

FIGURE 3-28: *MCP1501-40 Transient Response vs. Capacitive Load, V_{DD} = 5V.*

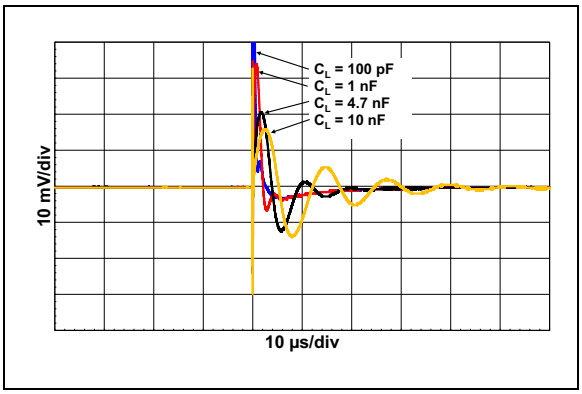

FIGURE 3-26: *MCP1501-10 Transient Response vs. Capacitive Load, V_{DD} = 5V.*

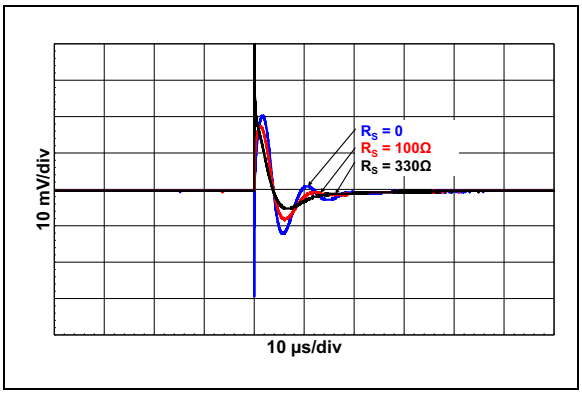

FIGURE 3-29: *MCP1501-10 Transient Response vs. R_S, V_{DD} = 5V, CL = 4.7nF.*

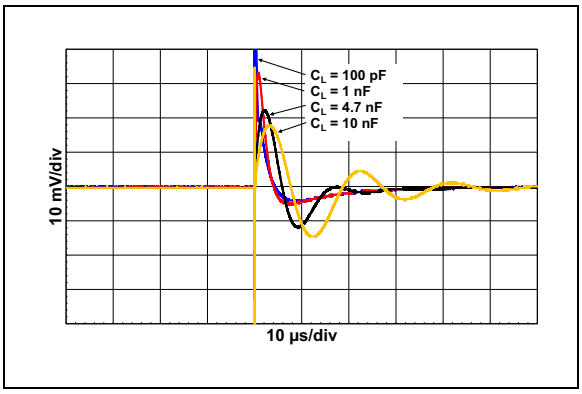

FIGURE 3-27: *MCP1501-20 Transient Response vs. Capacitive Load, V_{DD} = 5V.*

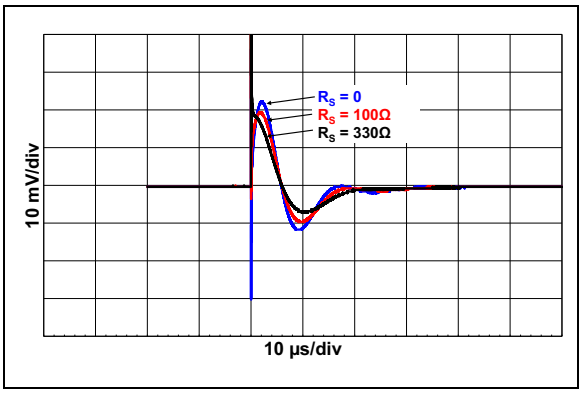

FIGURE 3-30: *MCP1501-20 Transient Response vs. R_S, V_{DD} = 5V, CL = 4.7nF.*

Note: Unless otherwise specified, maximum values are: $V_{DD(MIN)} \leq V_{DD} \leq 5.5V$ at $T_A = +25°C$.

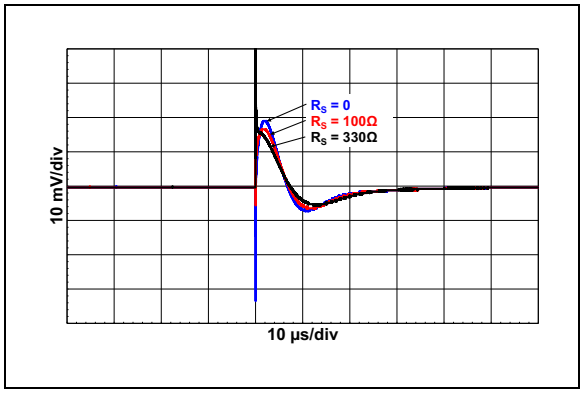

FIGURE 3-31: *MCP1501-40 Transient Response vs. R_S, V_{DD} = 5V, CL = 4.7nF.*

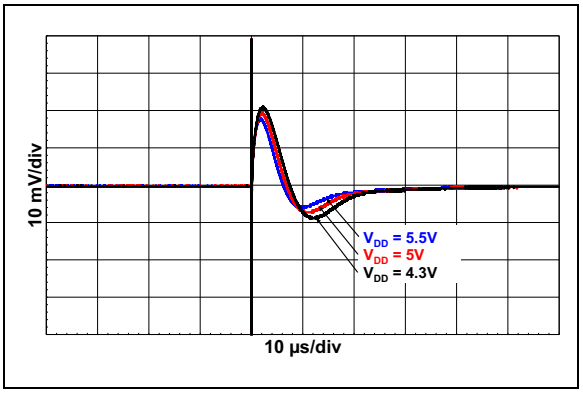

FIGURE 3-34: *MCP1501-40 Transient Response vs. V_{DD}, C_L = 4.7nF.*

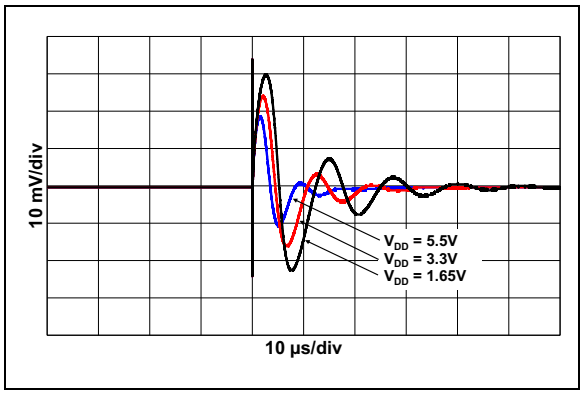

FIGURE 3-32: *MCP1501-10 Transient Response vs. V_{DD}, CL = 4.7nF.*

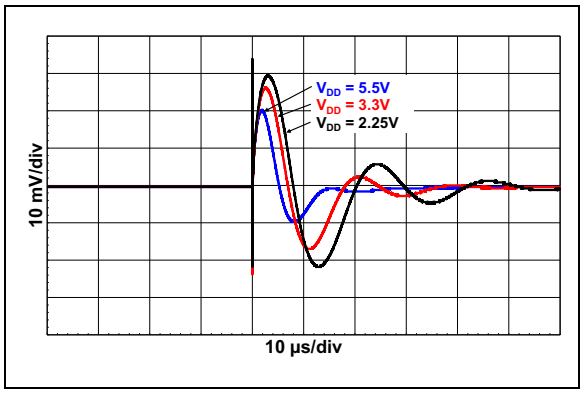

FIGURE 3-33: *MCP1501-20 Transient Response vs. V_{DD}, C_L = 4.7 nF.*

© 2015-2021 Microchip Technology Inc.

4.0 THEORY OF OPERATION

The MCP1501 is a buffered voltage reference that is capable of operating over a wide input supply range while providing a stable output across the input supply range. Refer to the **Block Diagram** for the detail of the MCP1501. As with all band gap circuits, the internal reference sums together two voltages having an opposite temperature coefficient which allows a voltage reference that is practically independent from temperature.

MCP1501 band gap is based on a second order temperature compensated circuit. This allows the MCP1501 to achieve high initial accuracy and low temperature coefficient operation across voltage and temperature. The band gap curvature compensation is determined during device characterization and is trimmed for optimal accuracy.

The MCP1501 also includes a chopper-based amplifier architecture that ensures excellent low-noise operation, further reduces temperature dependent offsets that would otherwise increase the temperature coefficient of the MCP1501, and significantly improves long-term drift performance. Additional circuitry is included to eliminate the chopping frequency from the output of the device.

After the band gap voltage is compensated, it is attenuated, buffered and provided to the output drive circuit. The device has excellent performance when sinking or sourcing load currents (±20 mA).

© 2015-2021 Microchip Technology Inc.

NOTES:

© 2015-2021 Microchip Technology Inc.

5.0 APPLICATION CIRCUITS

5.1 Application Tips

5.1.1 BASIC APPLICATION CIRCUIT

Figure 5-1 illustrates a basic circuit configuration of the MCP1501.

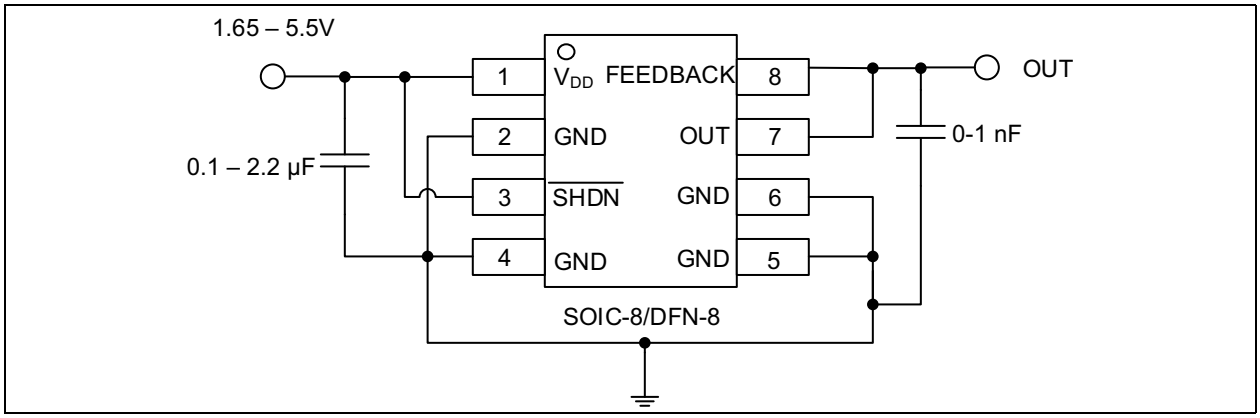

FIGURE 5-1: *Basic Circuit Configuration.*

An output capacitor is not required for stability of the voltage reference, but may be optionally added to provide noise filtering or act as a charge-reservoir for switching loads, e.g., successive approximation register (SAR) analog-to-digital converter (ADC). As shown, the input voltage is connected to the device at the V_{IN} input, with an optional 2.2 µf ceramic capacitor. This capacitor would be required if the input voltage has excessive noise. A 2.2 µf capacitor would reject input voltage noise at approximately 1 to 2 MHz. Noise below this frequency will be amply rejected by the input voltage rejection of the voltage reference. Noise at frequencies above 2 MHz will be beyond the bandwidth of the voltage reference and, consequently, not transmitted from the input pin through the device to the output.

If the noise at the output of the voltage references is too high for the particular application, it can be easily filtered with an external RC filter and op-amp buffer (see Figure 5-2).

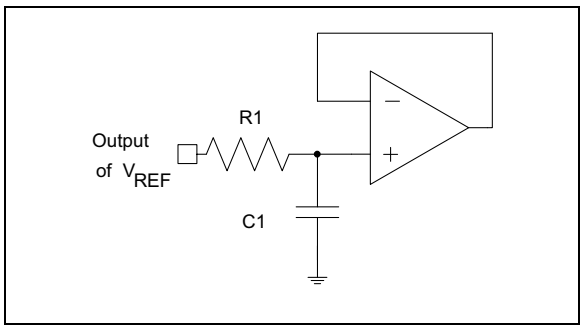

FIGURE 5-2: *Output Noise-Reducing Filter.*

The RC filter values are selected for a desired cutoff frequency, as shown in Equation 5-1.

EQUATION 5-1:

$$f_C = \frac{1}{2\pi(R1 \quad C1)}$$

The values that are shown in Figure 5-2 (10 kΩ and 1 µF) will create a first-order, low-pass filter at the output of the amplifier. The cutoff frequency of this filter is 15.9 Hz, and the attenuation slope is 20 dB/decade. The MCP6286 amplifier isolates the loading of this low-pass filter from the remainder of the application circuit. This amplifier also provides additional drive, with a faster response time than the voltage reference.

5.1.2 LOAD CAPACITOR

The maximum capacitive load without series resistance is 10nF. However, larger capacitors may be implemented if a resistor is used in series with a larger load capacitor. Refer to Figure 3-29, Figure 3-30 and Figure 3-31 for the transient response with the series resistor and capacitive load.

5.1.3 PRINTED CIRCUIT BOARD LAYOUT CONSIDERATIONS

Mechanical stress due to Printed Circuit Board (PCB) mounting can cause the output voltage to shift from its initial value. Devices in the SOT-23-6 package are generally more prone to assembly stress than devices in the WDFN package. To reduce stress-related output voltage shifts, mount the reference on low-stress areas of the PCB (i.e., away from PCB edges, screw holes and large components).

5.2 Typical Applications Circuits

5.2.1 NEGATIVE VOLTAGE REFERENCE

A negative voltage reference can be generated using any of the devices in the MCP1501 family. A typical application is shown in Figure 5-3. In this circuit, the voltage inversion is implemented using the MCP6061 and two equal resistors. The voltage at the output of the MCP1501 voltage reference drives R1, which is connected to the inverting input of the MCP6061 amplifier. Since the noninverting input of the amplifier is biased to ground, the inverting input will also be close to ground potential. The second 10 kΩ resistor is placed around the feedback loop of the amplifier. Since the inverting input of the amplifier is high-impedance, the current generated through R1 will also flow through R2. As a consequence, the output voltage of the amplifier is equal to –2.5V for the MCP1501-25 and –4.096V for the MCP1501-40.

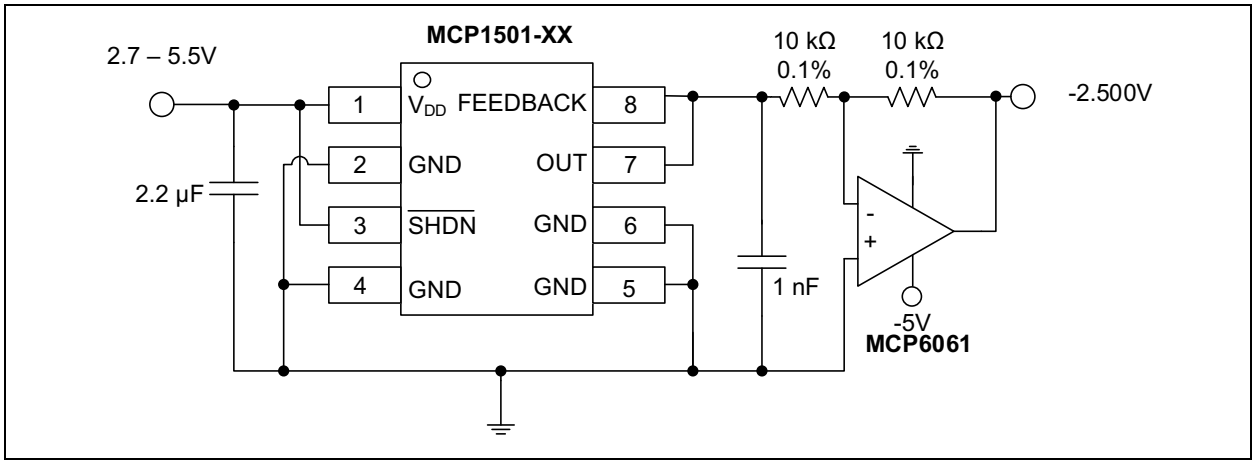

FIGURE 5-3: *Negative Voltage Reference.*

5.2.2 A/D CONVERTER REFERENCE

The MCP1501 product family was carefully designed to provide a precision, low noise voltage reference for the Microchip families of ADCs. The circuit shown in Figure 5-4 shows a MCP1501-25 configured to provide the reference to the MCP3201, a 12-bit ADC.

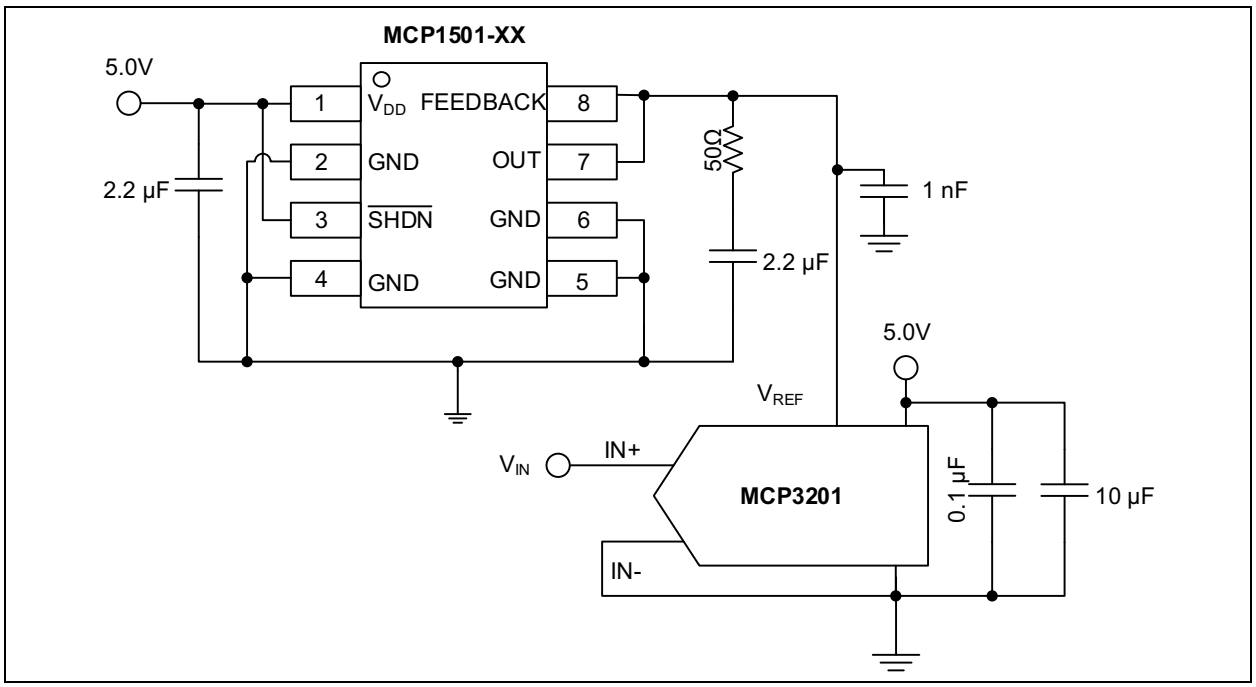

FIGURE 5-4: *ADC Example Circuit.*

© 2015-2021 Microchip Technology Inc.

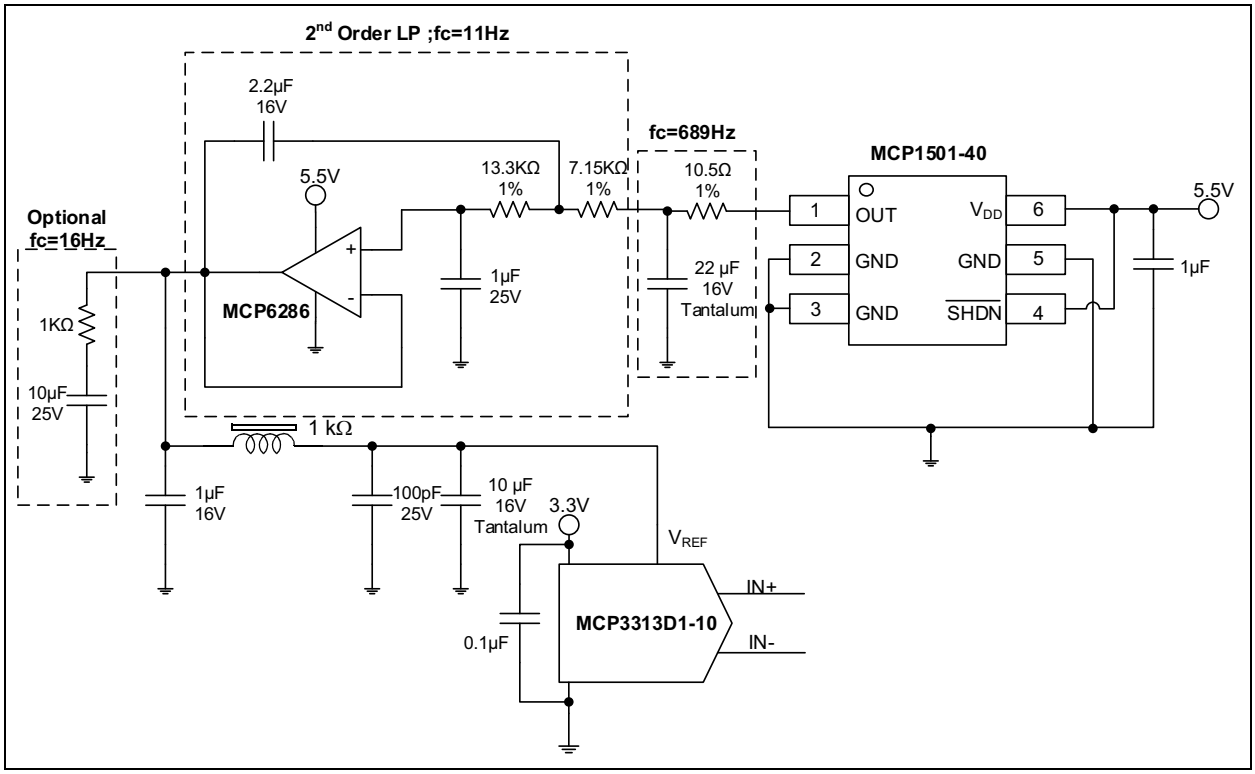

FIGURE 5-5: *SAR ADC Example Circuit.*

The circuit depicted in Figure 5-5 shows a MCP1501-40 configured to provide the reference to a SAR ADC. Refer to *"MCP331X1 16/15/12 bit MSPS SAR ADC Evaluation Kit User Guide"*, Microchip Technology Inc. (DS50002733).

NOTES:

© 2015-2021 Microchip Technology Inc.

6.0 PACKAGE INFORMATION

6.1 Package Markings

6-Lead SOT-23

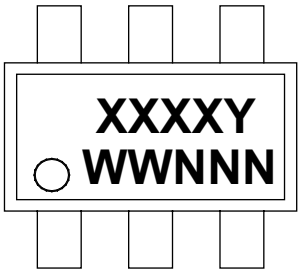

Device	Code
MCP1501T-10E/CHY	AABTY
MCP1501T-12E/CHY	AABUY
MCP1501T-18E/CHY	AABVY
MCP1501T-20E/CHY	AABWY
MCP1501T-25E/CHY	AABXY
MCP1501T-30E/CHY	AABYY
MCP1501T-33E/CHY	AABZY
MCP1501T-40E/CHY	AACAY

Example

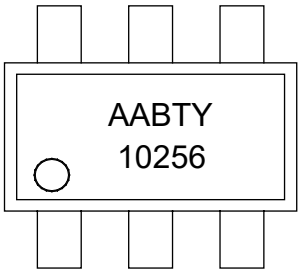

8-Lead SOIC

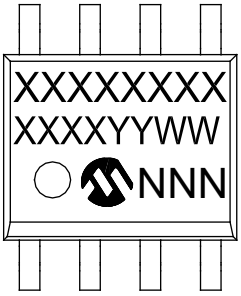

Device	Code
MCP1501T-10E/SN	150110
MCP1501T-12E/SN	150112
MCP1501-18E/SN	150118
MCP1501-20E/SN	150120
MCP1501T-25E/SN	150125
MCP1501T-30E/SN	150130
MCP1501T-33E/SN	150133
MCP1501T-40E/SN	150140

Example

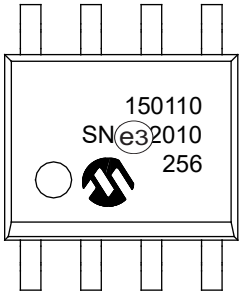

8-Lead WDFN (2 x2 mm)

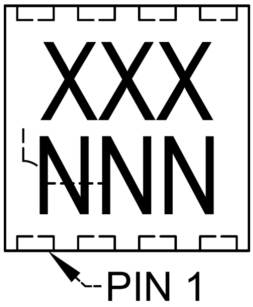

Device	Code
MCP1501T-10E/RW	AAQ
MCP1501T-12E/RW	AAR
MCP1501-18E/RW	AAS
MCP1501-20E/RW	AAT
MCP1501T-25E/RW	AAU
MCP1501T-30E/RW	AAV
MCP1501T-33E/RW	AAW
MCP1501T-40E/RW	AAX

Example

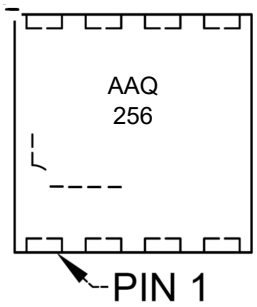

Legend:	XX...X	Customer-specific information
	Y	Year code (last digit of calendar year)
	YY	Year code (last 2 digits of calendar year)
	WW	Week code (week of January 1 is week ‘01’)
	NNN	Alphanumeric traceability code
	e3	Pb-free JEDEC® designator for Matte Tin (Sn)
	*	This package is Pb-free. The Pb-free JEDEC designator (e3) can be found on the outer packaging for this package.

Note: In the event the full Microchip part number cannot be marked on one line, it will be carried over to the next line, thus limiting the number of available characters for customer-specific information.

6-Lead Plastic Small Outline Transistor (CH, CHY) [SOT-23]

Note: For the most current package drawings, please see the Microchip Packaging Specification located at http://www.microchip.com/packaging

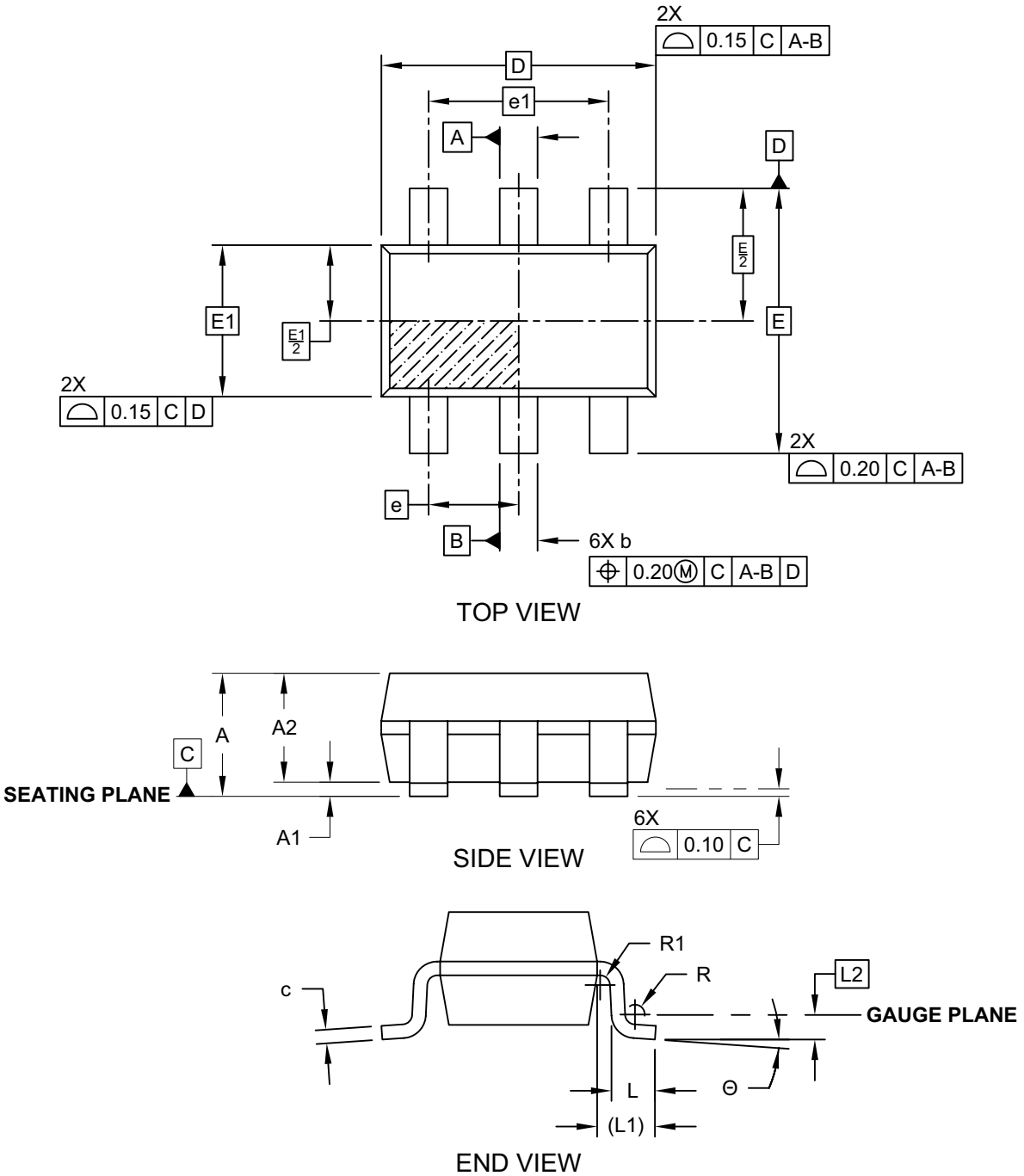

Microchip Technology Drawing C04-028C (CH) Sheet 1 of 2

© 2015-2021 Microchip Technology Inc.

6-Lead Plastic Small Outline Transistor (CH, CHY) [SOT-23]

Note: For the most current package drawings, please see the Microchip Packaging Specification located at http://www.microchip.com/packaging

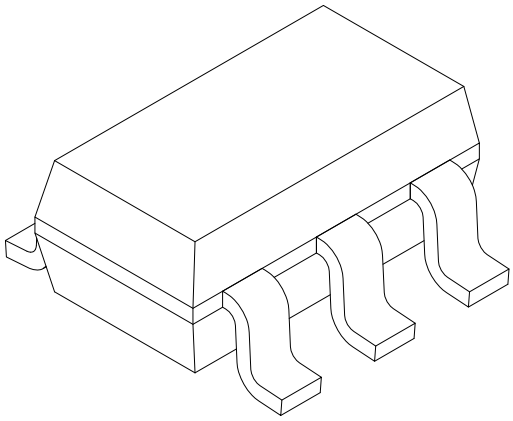

Units		MILLIMETERS		
Dimension Limits		MIN	NOM	MAX
Number of Leads	N	6		
Pitch	e	0.95 BSC		
Outside lead pitch	e1	1.90 BSC		
Overall Height	A	0.90	-	1.45
Molded Package Thickness	A2	0.89	1.15	1.30
Standoff	A1	0.00	-	0.15
Overall Width	E	2.80 BSC		
Molded Package Width	E1	1.60 BSC		
Overall Length	D	2.90 BSC		
Foot Length	L	0.30	0.45	0.60
Footprint	L1	0.60 REF		
Seating Plane to Gauge Plane	L1	0.25 BSC		
Foot Angle	ϕ	0°	-	10°
Lead Thickness	c	0.08	-	0.26
Lead Width	b	0.20	-	0.51

Notes:

1. Dimensions D and E1 do not include mold flash or protrusions. Mold flash or protrusions shall not exceed 0.25mm per side.
2. Dimensioning and tolerancing per ASME Y14.5M
   BSC: Basic Dimension. Theoretically exact value shown without tolerances.
   REF: Reference Dimension, usually without tolerance, for information purposes only.

Microchip Technology Drawing C04-028C (CH) Sheet 2 of 2

6-Lead Plastic Small Outline Transistor (CH, CHY) [SOT-23]

Note: For the most current package drawings, please see the Microchip Packaging Specification located at http://www.microchip.com/packaging

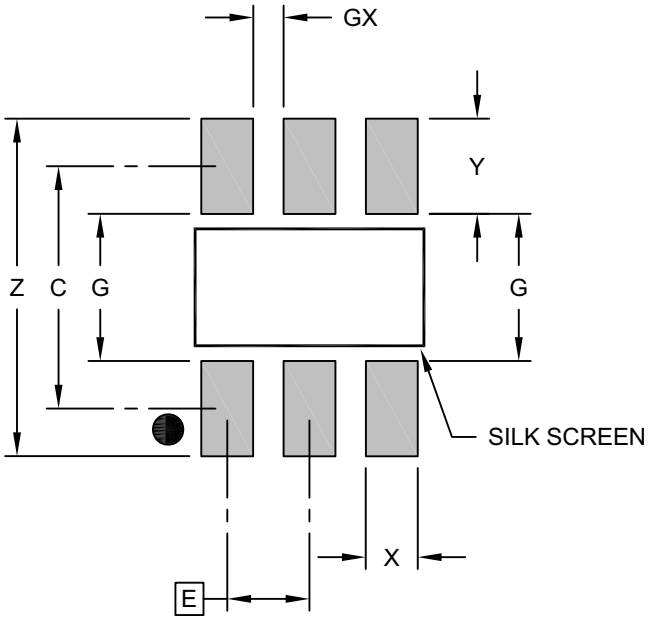

RECOMMENDED LAND PATTERN

Units		MILLIMETERS		
Dimension Limits		MIN	NOM	MAX
Contact Pitch	E		0.95 BSC	
Contact Pad Spacing	C		2.80	
Contact Pad Width (X3)	X			0.60
Contact Pad Length (X3)	Y			1.10
Distance Between Pads	G	1.70		
Distance Between Pads	GX	0.35		
Overall Width	Z			3.90

Notes:

1. Dimensioning and tolerancing per ASME Y14.5M
   BSC: Basic Dimension. Theoretically exact value shown without tolerances.

Microchip Technology Drawing No. C04-2028B (CH)

© 2015-2021 Microchip Technology Inc.

8-Lead Plastic Small Outline (SN) - Narrow, 3.90 mm (.150 In.) Body [SOIC]

Note: For the most current package drawings, please see the Microchip Packaging Specification located at http://www.microchip.com/packaging

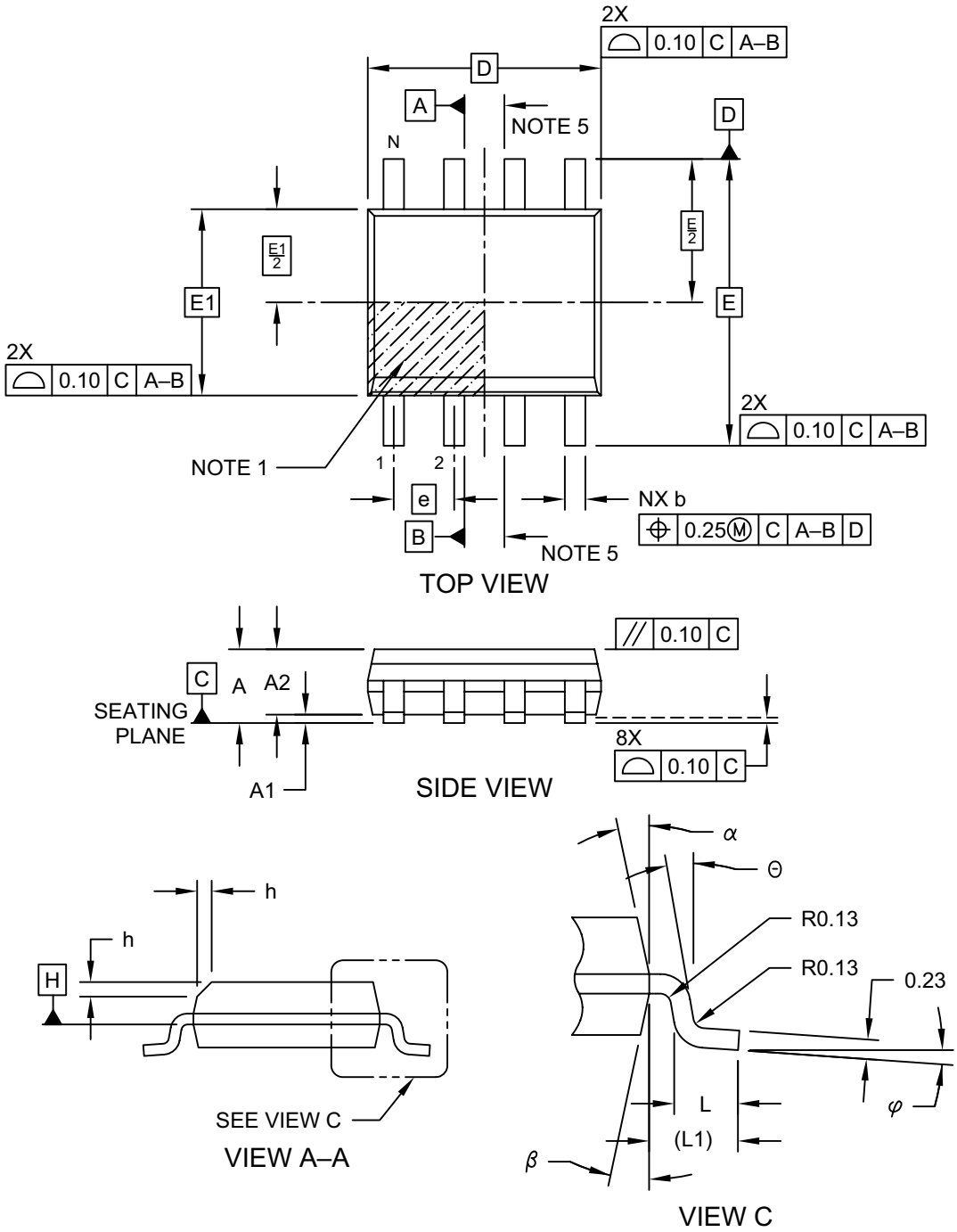

Microchip Technology Drawing No. C04-057-SN Rev F Sheet 1 of 2

8-Lead Plastic Small Outline (SN) - Narrow, 3.90 mm (.150 In.) Body [SOIC]

Note: For the most current package drawings, please see the Microchip Packaging Specification located at http://www.microchip.com/packaging

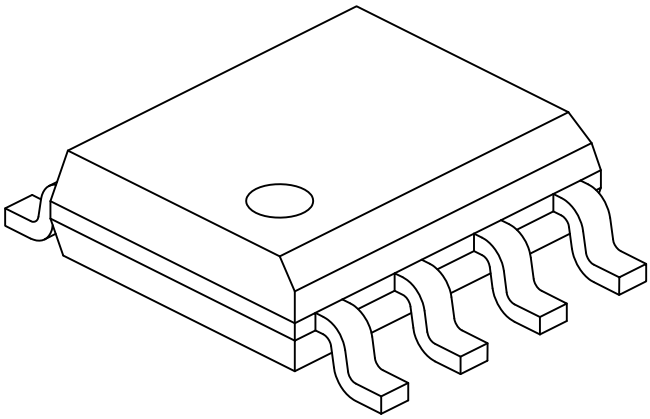

Units		MILLIMETERS		
Dimension Limits		MIN	NOM	MAX
Number of Pins	N	8		
Pitch	e	1.27 BSC		
Overall Height	A	-	-	1.75
Molded Package Thickness	A2	1.25	-	-
Standoff §	A1	0.10	-	0.25
Overall Width	E	6.00 BSC		
Molded Package Width	E1	3.90 BSC		
Overall Length	D	4.90 BSC		
Chamfer (Optional)	h	0.25	-	0.50
Foot Length	L	0.40	-	1.27
Footprint	L1	1.04 REF		
Foot Angle	φ	0°	-	8°
Lead Thickness	c	0.17	-	0.25
Lead Width	b	0.31	-	0.51
Mold Draft Angle Top	α	5°	-	15°
Mold Draft Angle Bottom	β	5°	-	15°

Notes:

1. Pin 1 visual index feature may vary, but must be located within the hatched area.
2. § Significant Characteristic
3. Dimensions D and E1 do not include mold flash or protrusions. Mold flash or protrusions shall not exceed 0.15mm per side.
4. Dimensioning and tolerancing per ASME Y14.5M
   BSC: Basic Dimension. Theoretically exact value shown without tolerances.
   REF: Reference Dimension, usually without tolerance, for information purposes only.
5. Datums A & B to be determined at Datum H.

Microchip Technology Drawing No. C04-057-SN Rev F Sheet 2 of 2

© 2015-2021 Microchip Technology Inc.

8-Lead Plastic Small Outline (SN) - Narrow, 3.90 mm (.150 In.) Body [SOIC]

Note: For the most current package drawings, please see the Microchip Packaging Specification located at http://www.microchip.com/packaging

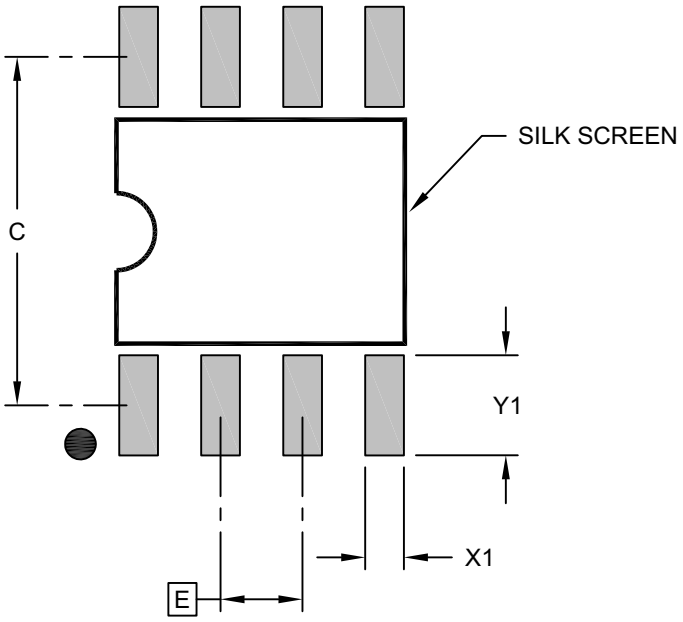

RECOMMENDED LAND PATTERN

Units		MILLIMETERS		
Dimension Limits		MIN	NOM	MAX
Contact Pitch	E	1.27 BSC		
Contact Pad Spacing	C		5.40	
Contact Pad Width (X8)	X1			0.60
Contact Pad Length (X8)	Y1			1.55

Notes:

1. Dimensioning and tolerancing per ASME Y14.5M
   BSC: Basic Dimension. Theoretically exact value shown without tolerances.

Microchip Technology Drawing C04-2057-SN Rev F

8-Lead Very, Very Thin Plastic Dual Flat, No Lead Package (RW) - 2x2 mm Body [WDFN]

Note: For the most current package drawings, please see the Microchip Packaging Specification located at http://www.microchip.com/packaging

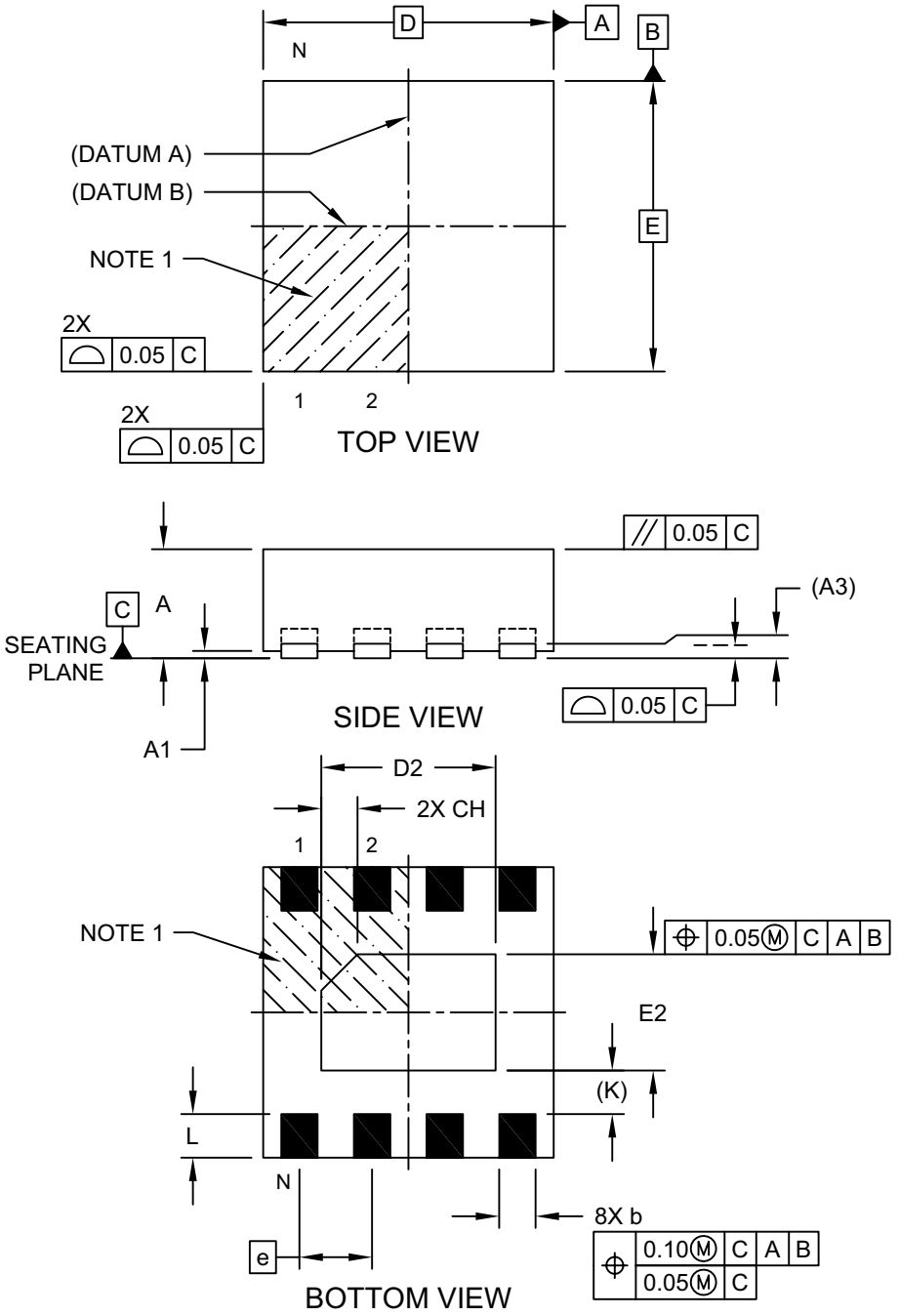

Microchip Technology Drawing C04-261A Sheet 1 of 2

© 2015-2021 Microchip Technology Inc.

8-Lead Very, Very Thin Plastic Dual Flat, No Lead Package (RW) - 2x2 mm Body [WDFN]

Note: For the most current package drawings, please see the Microchip Packaging Specification located at http://www.microchip.com/packaging

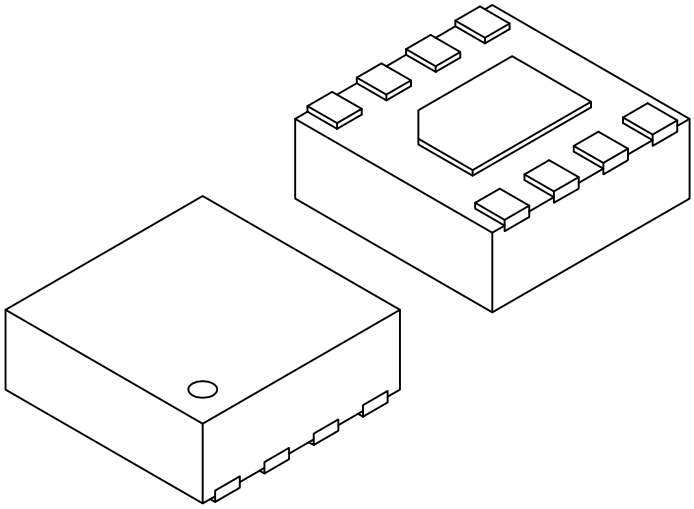

Units		MILLIMETERS		
Dimension Limits		MIN	NOM	MAX
Number of Terminals	N	8		
Pitch	e	0.50 BSC		
Overall Height	A	0.70	0.75	0.80
Standoff	A1	0.00	0.02	0.05
Terminal Thickness	(A3)	0.10 REF		
Overall Width	E	2.00 BSC		
Exposed Pad Width	E2	0.70	0.80	0.90
Overall Length	D	2.00 BSC		
Exposed Pad Length	D2	1.10	1.20	1.30
Exposed Pad Chamfer	CH	-	0.25	-
Terminal Width	b	0.20	0.25	0.30
Terminal Length	L	0.25	0.30	0.35
Terminal-to-Exposed-Pad	(K)	0.30	-	-

Notes:

1. Pin 1 visual index feature may vary, but must be located within the hatched area.
2. Package is saw singulated
3. Dimensioning and tolerancing per ASME Y14.5M

   BSC: Basic Dimension. Theoretically exact value shown without tolerances.

   REF: Reference Dimension, usually without tolerance, for information purposes only.

Microchip Technology Drawing C04-261A Sheet 2 of 2

8-Lead Very, Very Thin Plastic Dual Flat, No Lead Package (RW) - 2x2 mm Body [WDFN]

Note: For the most current package drawings, please see the Microchip Packaging Specification located at http://www.microchip.com/packaging

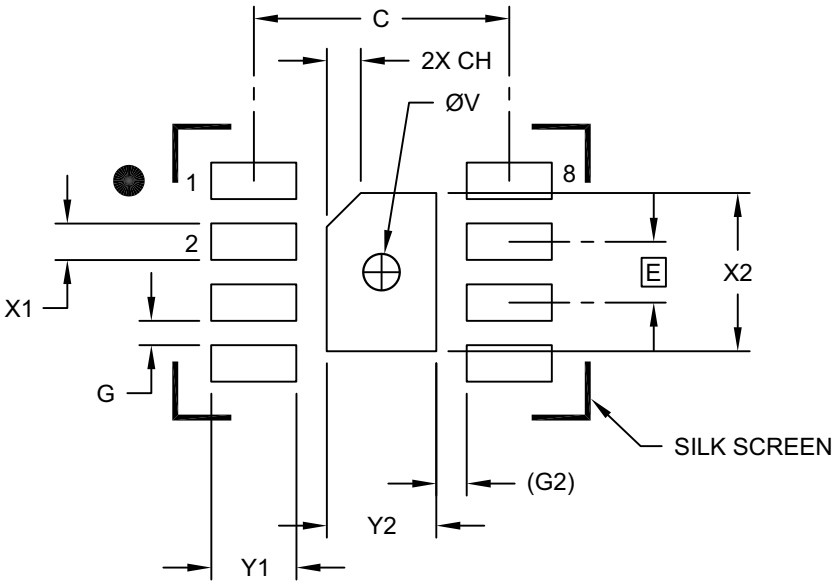

RECOMMENDED LAND PATTERN

Units		MILLIMETERS		
Dimension Limits		MIN	NOM	MAX
Contact Pitch	E		0.50 BSC	
Optional Center Pad Width	Y2			0.90
Optional Center Pad Length	X2			1.30
Contact Pad Spacing	C		2.10	
Center Pad Chamfer	CH		0.28	
Contact Pad Width (X8)	X1			0.30
Contact Pad Length (X8)	Y1			0.70
Contact Pad to Contact Pad (X6)	G1	0.20		
Contact Pad to Center Pad (X8)	G1		0.25 REF	
Thermal Via Diameter	V		0.30	

Notes:

1. Dimensioning and tolerancing per ASME Y14.5M

   BSC: Basic Dimension. Theoretically exact value shown without tolerances.

   REF: Reference Dimension, usually without tolerances, for reference only.

Microchip Technology Drawing C04-2261A

© 2015-2021 Microchip Technology Inc.

APPENDIX A: REVISION HISTORY

Revision F (March 2021)

The following is the list of modifications:

- Added AEC-Q100 qualification for Automotive applications
- Updated **Section 3.0 "Typical Operating Curves"**
- Updated Features
- Updated General Description
- Updated Block Diagram
- Updated **TABLE 2-1: "DC Characteristics"**.
- Updated **Section 5.1.2 "LOAD CAPACITOR"**.
- Updated Figure 5-4 and Figure 5-5.
- Updated **Section 6.0 "Package Information"**.

Revision E (August 2017)

The following is the list of modifications:

- Updated Features.
- Updated Package Types.
- Updated **Section 1.0, Electrical Characteristics**, Table 1-1.
- Updated Figure 2-12, Figure 2-20 and Figure 2-21.
- Updated Table 3-1.
- Updated Section 3.4, $\overline{\text{Shutdown Pin (SHDN)}}$.
- Updated **Section 5.1.2, LOAD CAPACITOR**.
- Corrected Figure 5-3 and Figure 5-4.
- Added Figure 5-5.
- Minor typographical corrections.

Revision D (March 2017)

The following is the list of modifications:

- Updated Table 1-1.
- Updated Equation 1-1, Equation 1-4, Equation 1-5, Equation 1-10, Equation 1-11, Equation 1-12 and Equation 1-16.
- Updated Figure 2-11, Figure 2-20, Figure 2-21, Figure 2-25 and Figure 2-26.
- Updated Figure 5-1 and Figure 5-4.
- Updated **"Product Identification System"** section.
- Minor typographical corrections.

Revision C (May 2016)

The following is the list of modifications:

- Updated **Section 1.0, Electrical Characteristics**, **Section 4.0, Theory of Operation**, **Section 5.0, Application Circuits**.
- Updated Features section, General Description section, **Section 3.1, Buffered V_{REF} Output (OUT)**.
- Updated**"Product Identification System"** section.
- Updated Figure 2-12, Figure 2-20, Figure 2-21, Figure 5-1 and Figure 5-4.
- Updated Equation 2-10 and Equation 1-16.
- Minor typographical corrections.

Revision B (January 2016)

The following is the list of modifications:

- Updated **Section 6.0 "Package Information"**.
- Updated **"Product Identification System"** section.
- Minor typographical corrections.

Revision A (December 2015)

Original Release of this Document.

NOTES:

© 2015-2021 Microchip Technology Inc.

PRODUCT IDENTIFICATION SYSTEM

To order or obtain information, e.g., on pricing or delivery, refer to the factory or the listed sales office.

PART NO.-	[X](1)	X	/XX
Device	Tape and Reel	Output Voltage Option	Package

Device:	MCP1501 – 50 ppm maximum thermal drift buffered reference		
Tape and Reel Option:	Blank	=	Standard packaging (tube or tray)
	T	=	Tape and Reel (1)
Output Voltage Option:	10	=	1.024V
	12	=	1.250V
	18	=	1.800V
	20	=	2.048V
	25	=	2.500V
	30	=	3.000V
	33	=	3.300V
	40	=	4.096V
Package:	CHY*	=	6-Lead Plastic Small Outline Transistor (SOT-23)
	SN	=	8-Lead Plastic Small Outline – Narrow, 3.90 mm Body (SOIC)
	RW	=	8-Lead Very, Very Thin Plastic Dual Flat, No Lead Package – 2 x 2 mm Body (WDFN)
	*Y	=	Nickel palladium gold manufacturing designator. Only available on the SOT-23 package.

Examples:

a)	MCP1501T-10E/CHY:	1.024V, 6-lead SOT-23 package, Tape and Reel
b)	MCP1501-12E/SN:	1.2V, 8-lead SOIC package
c)	MCP1501T-18E/SN:	1.8V, 8-lead SOIC package, Tape and Reel
d)	MCP1501T-20E/RW:	2.048V, 8-lead WDFN package, Tape and Reel

Note 1: Tape and Reel identifier only appears in the catalog part number description. This identifier is used for ordering purposes and is not printed on the device package. Check with your Microchip sales office for package availability for the Tape and Reel option.

NOTES:

© 2015-2021 Microchip Technology Inc.

Note the following details of the code protection feature on Microchip devices:

- Microchip products meet the specifications contained in their particular Microchip Data Sheet.
- Microchip believes that its family of products is secure when used in the intended manner and under normal conditions.
- There are dishonest and possibly illegal methods being used in attempts to breach the code protection features of the Microchip devices. We believe that these methods require using the Microchip products in a manner outside the operating specifications contained in Microchip's Data Sheets. Attempts to breach these code protection features, most likely, cannot be accomplished without violating Microchip's intellectual property rights.
- Microchip is willing to work with any customer who is concerned about the integrity of its code.
- Neither Microchip nor any other semiconductor manufacturer can guarantee the security of its code. Code protection does not mean that we are guaranteeing the product is "unbreakable." Code protection is constantly evolving. We at Microchip are committed to continuously improving the code protection features of our products. Attempts to break Microchip's code protection feature may be a violation of the Digital Millennium Copyright Act. If such acts allow unauthorized access to your software or other copyrighted work, you may have a right to sue for relief under that Act.

Information contained in this publication is provided for the sole purpose of designing with and using Microchip products. Information regarding device applications and the like is provided only for your convenience and may be superseded by updates. It is your responsibility to ensure that your application meets with your specifications.

THIS INFORMATION IS PROVIDED BY MICROCHIP "AS IS". MICROCHIP MAKES NO REPRESENTATIONS OR WARRANTIES OF ANY KIND WHETHER EXPRESS OR IMPLIED, WRITTEN OR ORAL, STATUTORY OR OTHERWISE, RELATED TO THE INFORMATION INCLUDING BUT NOT LIMITED TO ANY IMPLIED WARRANTIES OF NON-INFRINGEMENT, MERCHANTABILITY, AND FITNESS FOR A PARTICULAR PURPOSE OR WARRANTIES RELATED TO ITS CONDITION, QUALITY, OR PERFORMANCE.

IN NO EVENT WILL MICROCHIP BE LIABLE FOR ANY INDIRECT, SPECIAL, PUNITIVE, INCIDENTAL OR CONSEQUENTIAL LOSS, DAMAGE, COST OR EXPENSE OF ANY KIND WHATSOEVER RELATED TO THE INFORMATION OR ITS USE, HOWEVER CAUSED, EVEN IF MICROCHIP HAS BEEN ADVISED OF THE POSSIBILITY OR THE DAMAGES ARE FORESEEABLE. TO THE FULLEST EXTENT ALLOWED BY LAW, MICROCHIP'S TOTAL LIABILITY ON ALL CLAIMS IN ANY WAY RELATED TO THE INFORMATION OR ITS USE WILL NOT EXCEED THE AMOUNT OF FEES, IF ANY, THAT YOU HAVE PAID DIRECTLY TO MICROCHIP FOR THE INFORMATION. Use of Microchip devices in life support and/or safety applications is entirely at the buyer's risk, and the buyer agrees to defend, indemnify and hold harmless Microchip from any and all damages, claims, suits, or expenses resulting from such use. No licenses are conveyed, implicitly or otherwise, under any Microchip intellectual property rights unless otherwise stated.

For information regarding Microchip's Quality Management Systems, please visit www.microchip.com/quality.

Trademarks

The Microchip name and logo, the Microchip logo, Adaptec, AnyRate, AVR, AVR logo, AVR Freaks, BesTime, BitCloud, chipKIT, chipKIT logo, CryptoMemory, CryptoRF, dsPIC, FlashFlex, flexPWR, HELDO, IGLOO, JukeBlox, KeeLoq, Kleer, LANCheck, LinkMD, maXStylus, maXTouch, MediaLB, megaAVR, Microsemi, Microsemi logo, MOST, MOST logo, MPLAB, OptoLyzer, PackeTime, PIC, picoPower, PICSTART, PIC32 logo, PolarFire, Prochip Designer, QTouch, SAM-BA, SenGenuity, SpyNIC, SST, SST Logo, SuperFlash, Symmetricom, SyncServer, Tachyon, TimeSource, tinyAVR, UNI/O, Vectron, and XMEGA are registered trademarks of Microchip Technology Incorporated in the U.S.A. and other countries.

AgileSwitch, APT, ClockWorks, The Embedded Control Solutions Company, EtherSynch, FlashTec, Hyper Speed Control, HyperLight Load, IntelliMOS, Libero, motorBench, mTouch, Powermite 3, Precision Edge, ProASIC, ProASIC Plus, ProASIC Plus logo, Quiet-Wire, SmartFusion, SyncWorld, Temux, TimeCesium, TimeHub, TimePictra, TimeProvider, WinPath, and ZL are registered trademarks of Microchip Technology Incorporated in the U.S.A.

Adjacent Key Suppression, AKS, Analog-for-the-Digital Age, Any Capacitor, AnyIn, AnyOut, Augmented Switching, BlueSky, BodyCom, CodeGuard, CryptoAuthentication, CryptoAutomotive, CryptoCompanion, CryptoController, dsPICDEM, dsPICDEM.net, Dynamic Average Matching, DAM, ECAN, Espresso T1S, EtherGREEN, IdealBridge, In-Circuit Serial Programming, ICSP, INICnet, Intelligent Paralleling, Inter-Chip Connectivity, JitterBlocker, maxCrypto, maxView, memBrain, Mindi, MiWi, MPASM, MPF, MPLAB Certified logo, MPLIB, MPLINK, MultiTRAK, NetDetach, Omniscient Code Generation, PICDEM, PICDEM.net, PICkit, PICtail, PowerSmart, PureSilicon, QMatrix, REAL ICE, Ripple Blocker, RTAX, RTG4, SAM-ICE, Serial Quad I/O, simpleMAP, SimpliPHY, SmartBuffer, SMART-I.S., storClad, SQI, SuperSwitcher, SuperSwitcher II, Switchtec, SynchroPHY, Total Endurance, TSHARC, USBCheck, VariSense, VectorBlox, VeriPHY, ViewSpan, WiperLock, XpressConnect, and ZENA are trademarks of Microchip Technology Incorporated in the U.S.A. and other countries.

SQTP is a service mark of Microchip Technology Incorporated in the U.S.A.

The Adaptec logo, Frequency on Demand, Silicon Storage Technology, and Symmcom are registered trademarks of Microchip Technology Inc. in other countries.

GestIC is a registered trademark of Microchip Technology Germany II GmbH & Co. KG, a subsidiary of Microchip Technology Inc., in other countries.

All other trademarks mentioned herein are property of their respective companies.

© 2021, Microchip Technology Incorporated, All Rights Reserved.

ISBN: 978-1-5224-7970-3

Worldwide Sales and Service

AMERICAS

Corporate Office
2355 West Chandler Blvd.
Chandler, AZ 85224-6199
Tel: 480-792-7200
Fax: 480-792-7277
Technical Support:
http://www.microchip.com/support
Web Address:
www.microchip.com

Atlanta
Duluth, GA
Tel: 678-957-9614
Fax: 678-957-1455

Austin, TX
Tel: 512-257-3370

Boston
Westborough, MA
Tel: 774-760-0087
Fax: 774-760-0088

Chicago
Itasca, IL
Tel: 630-285-0071
Fax: 630-285-0075

Dallas
Addison, TX
Tel: 972-818-7423
Fax: 972-818-2924

Detroit
Novi, MI
Tel: 248-848-4000

Houston, TX
Tel: 281-894-5983

Indianapolis
Noblesville, IN
Tel: 317-773-8323
Fax: 317-773-5453
Tel: 317-536-2380

Los Angeles
Mission Viejo, CA
Tel: 949-462-9523
Fax: 949-462-9608
Tel: 951-273-7800

Raleigh, NC
Tel: 919-844-7510

New York, NY
Tel: 631-435-6000

San Jose, CA
Tel: 408-735-9110
Tel: 408-436-4270

Canada - Toronto
Tel: 905-695-1980
Fax: 905-695-2078

ASIA/PACIFIC

Australia - Sydney
Tel: 61-2-9868-6733

China - Beijing
Tel: 86-10-8569-7000

China - Chengdu
Tel: 86-28-8665-5511

China - Chongqing
Tel: 86-23-8980-9588

China - Dongguan
Tel: 86-769-8702-9880

China - Guangzhou
Tel: 86-20-8755-8029

China - Hangzhou
Tel: 86-571-8792-8115

China - Hong Kong SAR
Tel: 852-2943-5100

China - Nanjing
Tel: 86-25-8473-2460

China - Qingdao
Tel: 86-532-8502-7355

China - Shanghai
Tel: 86-21-3326-8000

China - Shenyang
Tel: 86-24-2334-2829

China - Shenzhen
Tel: 86-755-8864-2200

China - Suzhou
Tel: 86-186-6233-1526

China - Wuhan
Tel: 86-27-5980-5300

China - Xian
Tel: 86-29-8833-7252

China - Xiamen
Tel: 86-592-2388138

China - Zhuhai
Tel: 86-756-3210040

ASIA/PACIFIC

India - Bangalore
Tel: 91-80-3090-4444

India - New Delhi
Tel: 91-11-4160-8631

India - Pune
Tel: 91-20-4121-0141

Japan - Osaka
Tel: 81-6-6152-7160

Japan - Tokyo
Tel: 81-3-6880- 3770

Korea - Daegu
Tel: 82-53-744-4301

Korea - Seoul
Tel: 82-2-554-7200

Malaysia - Kuala Lumpur
Tel: 60-3-7651-7906

Malaysia - Penang
Tel: 60-4-227-8870

Philippines - Manila
Tel: 63-2-634-9065

Singapore
Tel: 65-6334-8870

Taiwan - Hsin Chu
Tel: 886-3-577-8366

Taiwan - Kaohsiung
Tel: 886-7-213-7830

Taiwan - Taipei
Tel: 886-2-2508-8600

Thailand - Bangkok
Tel: 66-2-694-1351

Vietnam - Ho Chi Minh
Tel: 84-28-5448-2100

EUROPE

Austria - Wels
Tel: 43-7242-2244-39
Fax: 43-7242-2244-393

Denmark - Copenhagen
Tel: 45-4485-5910
Fax: 45-4485-2829

Finland - Espoo
Tel: 358-9-4520-820

France - Paris
Tel: 33-1-69-53-63-20
Fax: 33-1-69-30-90-79

Germany - Garching
Tel: 49-8931-9700

Germany - Haan
Tel: 49-2129-3766400

Germany - Heilbronn
Tel: 49-7131-72400

Germany - Karlsruhe
Tel: 49-721-625370

Germany - Munich
Tel: 49-89-627-144-0
Fax: 49-89-627-144-44

Germany - Rosenheim
Tel: 49-8031-354-560

Israel - Ra'anana
Tel: 972-9-744-7705

Italy - Milan
Tel: 39-0331-742611
Fax: 39-0331-466781

Italy - Padova
Tel: 39-049-7625286

Netherlands - Drunen
Tel: 31-416-690399
Fax: 31-416-690340

Norway - Trondheim
Tel: 47-7288-4388

Poland - Warsaw
Tel: 48-22-3325737

Romania - Bucharest
Tel: 40-21-407-87-50

Spain - Madrid
Tel: 34-91-708-08-90
Fax: 34-91-708-08-91

Sweden - Gothenberg
Tel: 46-31-704-60-40

Sweden - Stockholm
Tel: 46-8-5090-4654

UK - Wokingham
Tel: 44-118-921-5800
Fax: 44-118-921-5820

© 2015-2021 Microchip Technology Inc.