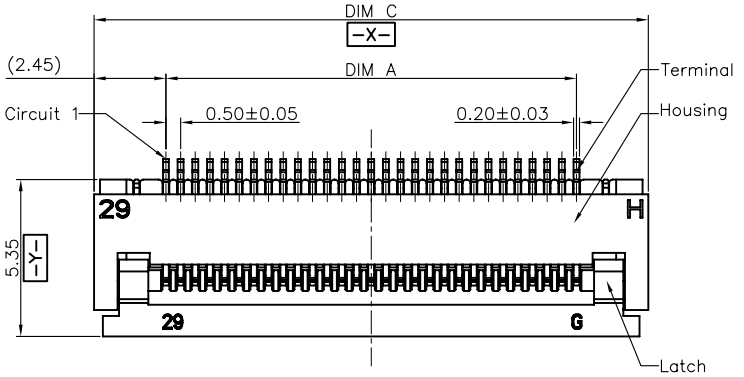

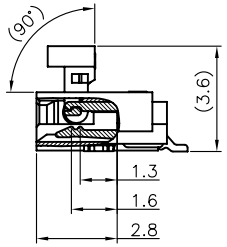

SECTION A–A
SCALE 1:1

Note:
1. Material:
   1.1 Housing: thermoplastic high temp.UL94V–0; Color: natural.
   1.2 Latch: thermoplastic high temp.UL94V–0; Color: black.
   1.3 Terminal: copper alloy.
   1.4 Fitting Nail: copper alloy.
2. Finsh:
   2.1 Terminal:
   Underplating: Au/matt Tin overall.
   2.2 Fitting Nail:
   Underplating: matt Tin overall.
3. Product must comply HF RoHS specification.
4. Product No:

AFC01–S ** H * A – 00

- CKTS
- CONTACTS TYPE: F:Lower; H:Double Lower
- PLATING: 1:Gold flash 1u"; 2:Gold flash 2u"; 3:Gold flash 3u"; B:Bright–Tin; C:Matt–Tin
- PACKING: A:Tape&Reel; C:Tube
- REMARKS: HF:Halogen free

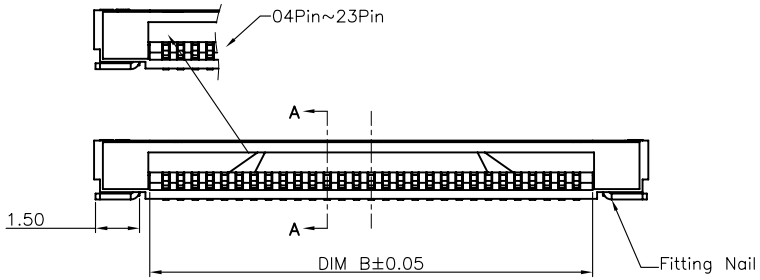

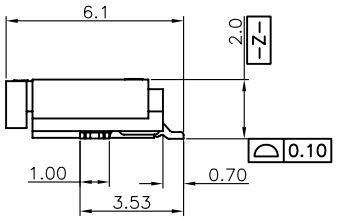

CKTS	DIM A	DIM B	DIM C
4	1.50	2.60	6.40
5	2.00	3.10	6.90
6	2.50	3.60	7.40
7	3.00	4.10	7.90
8	3.50	4.60	8.40
9	4.00	5.10	8.90
10	4.50	5.60	9.40
11	5.00	6.10	9.90
12	5.50	6.60	10.40
13	6.00	7.10	10.90
14	6.50	7.60	11.40
15	7.00	8.10	11.90
16	7.50	8.60	12.40
17	8.00	9.10	12.90
18	8.50	9.60	13.40
19	9.00	10.10	13.90
20	9.50	10.60	14.40
21	10.00	11.10	14.90
22	10.50	11.60	15.40
23	11.00	12.10	15.90
24	11.50	12.60	16.40
25	12.00	13.10	16.90
26	12.50	13.60	17.40
27	13.00	14.10	17.90
28	13.50	14.60	18.40
29	14.00	15.10	18.90
30	14.50	15.60	19.40
31	15.00	16.10	19.90
32	15.50	16.60	20.40
33	16.00	17.10	20.90
34	16.50	17.60	21.40
35	17.00	18.10	21.90
36	17.50	18.60	22.40
37	18.00	19.10	22.90
38	18.50	19.60	23.40
39	19.00	20.10	23.90
40	19.50	20.60	24.40
41	20.00	21.10	24.90
42	20.50	21.60	25.40
43	21.00	22.10	25.90
44	21.50	22.60	26.40
45	22.00	23.10	26.90
46	22.50	23.60	27.40
47	23.00	24.10	27.90
48	23.50	24.60	28.40
49	24.00	25.10	28.90
50	24.50	25.60	29.40
51	25.00	26.10	29.90
52	25.50	26.60	30.40
53	26.00	27.10	30.90
54	26.50	27.60	31.40
55	27.00	28.10	31.90
56	27.50	28.60	32.40
57	28.00	29.10	32.90
58	28.50	29.60	33.40
59	29.00	30.10	33.90
60	29.50	30.60	34.40

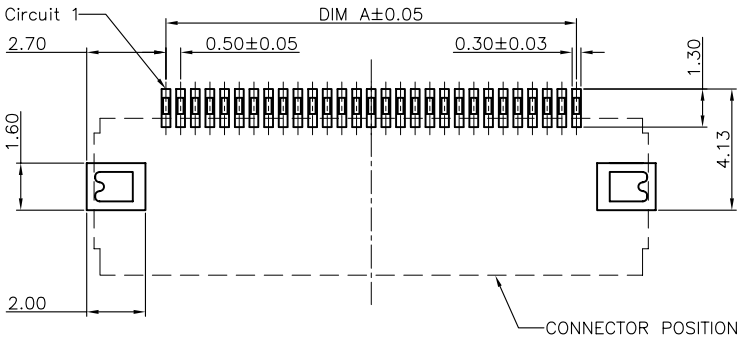

RECOMMENDED P.C.B PATTERN LAYOUT

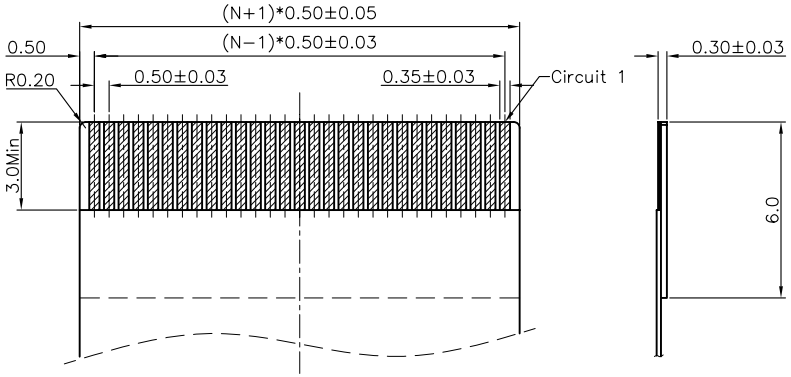

RECOMMENDED FPC/FFC DIMENSION

Rev 版本	Change Description 变更内容	Date 日期	Revisor 制/修订人
A	初版发行	2011/03/23	Allan

CUSTOMER DRAWING

Tolerance Unspecified (未注公差)
0.0 ±0.15 0°. ±5°
0.00 ±0.10 0°.0 ±3°
0.000 ±0.05 0°.00 ±1°

Project View (投影视角)

Size(图幅): A4
Unit(单位): MM
Scale(比例): 1 : 1
Page(页数): 1 OF 1
Rev(版本): A

深圳市钜硕电子有限公司

Product Name(产品名称): 0.5Pitch H=2.0 FPC Easy-on R/A Type1 SMT CONN

Product No(产品料号): AFC01-S**F**-00

Designer(设计): Allan 03/23'11
Checked(审核):
Approved(核准):