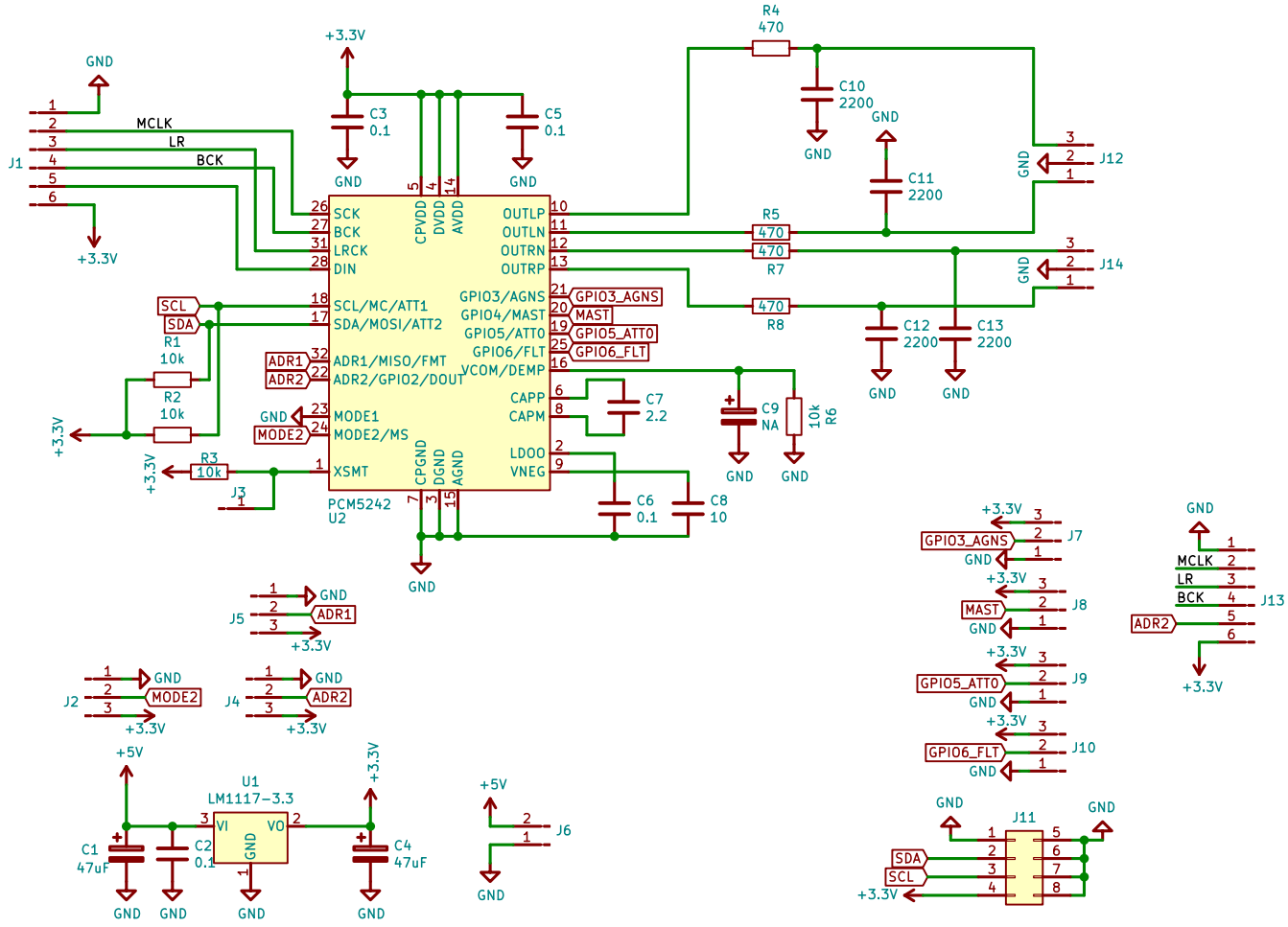

PCM5242
U2
SCK
BCK
LRCK
DIN
SCL/MC/ATT1
SDA/MOSI/ATT2
ADR1/MISO/FMT
ADR2/GPIO2/DOUT
MODE1
MODE2/MS
XSMT
CPVDD
DVDD
AVDD
CPGND
DGND
AGND
OUTLP
OUTLN
OUTRN
OUTRP
GPIO3/AGNS
GPIO4/MAST
GPIO5/ATT0
GPIO6/FLT
VCOM/DEMP
CAPP
CAPM
LDOO
VNEG
J1
MCLK
LR
BCK
J12
J14
J3
J5
J2
J4
J6
J7
J8
J9
J10
J11
J13
R1 10k
R2 10k
R3 10k
R4 470
R5 470
R6 10k
R7 470
R8 470
C3 0.1
C5 0.1
C6 0.1
C7 2.2
C8 10
C9 NA
C10 2200
C11 2200
C12 2200
C13 2200
C1 47uF
C2 0.1
C4 47uF
U1
LM1117-3.3
VI
VO
GND
+3.3V
+5V