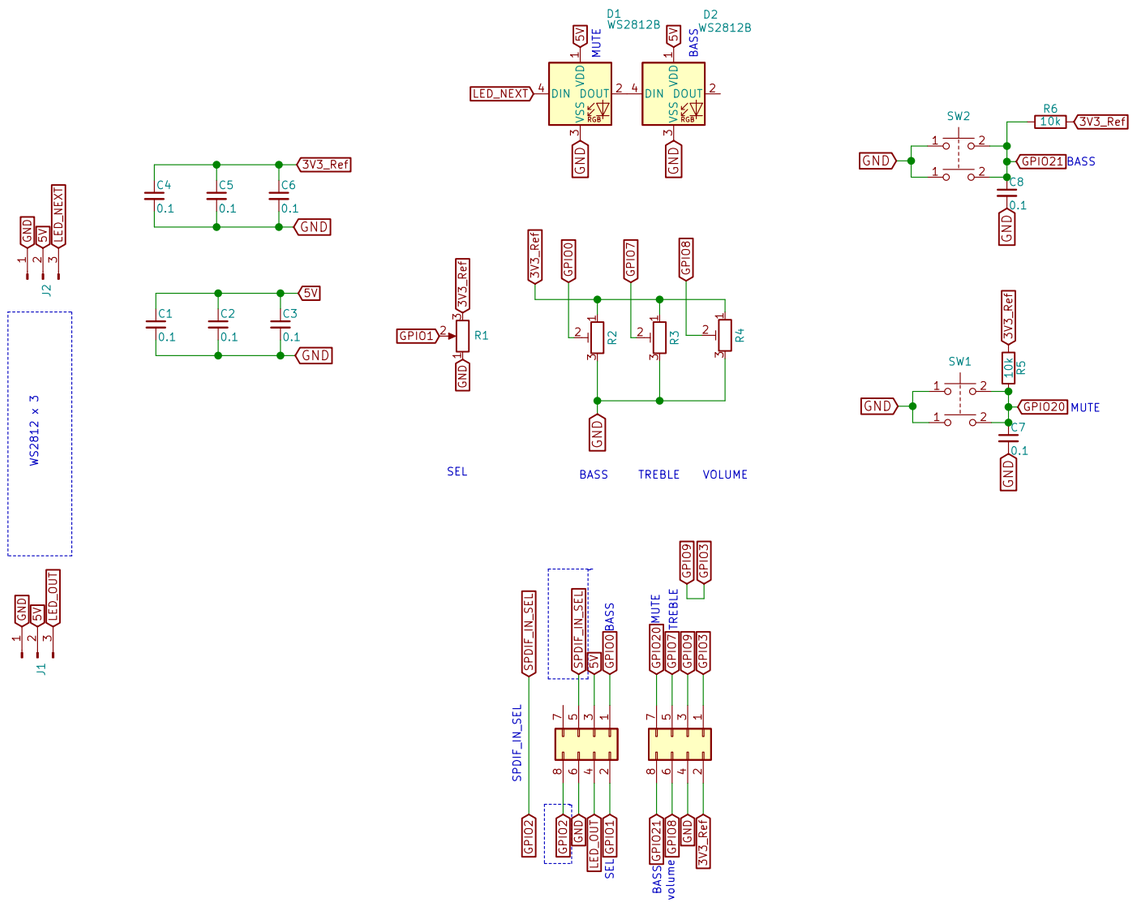

Sheet: /
File: Streamer_REFLEX_FrontPanel_2.sch

Title:

Size: A3	Date:	Rev:
KiCad E.D.A. kicad (5.1.12)-1		Id: 1/1