MICRO SWITCH
a Honeywell Division
FED. MFG. CODE 91929

SWITCH – BASIC

CATALOG LISTING
1DM79

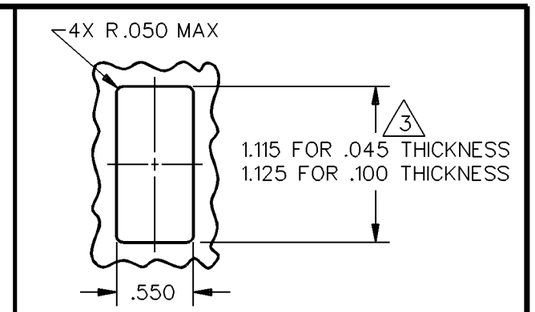

PANEL HOLE DETAIL
SCALE FULL

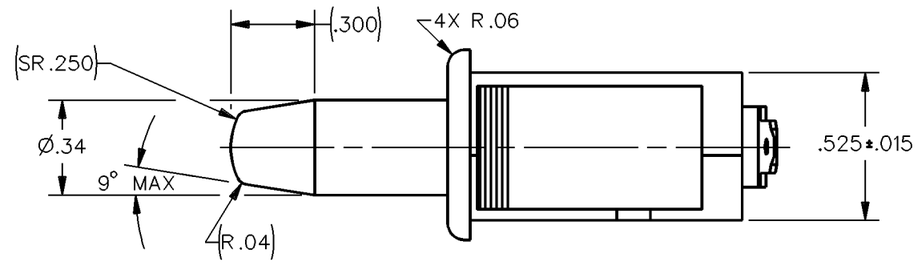

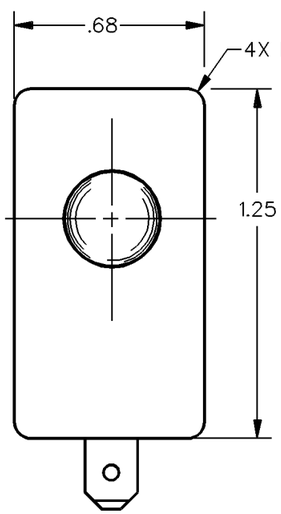

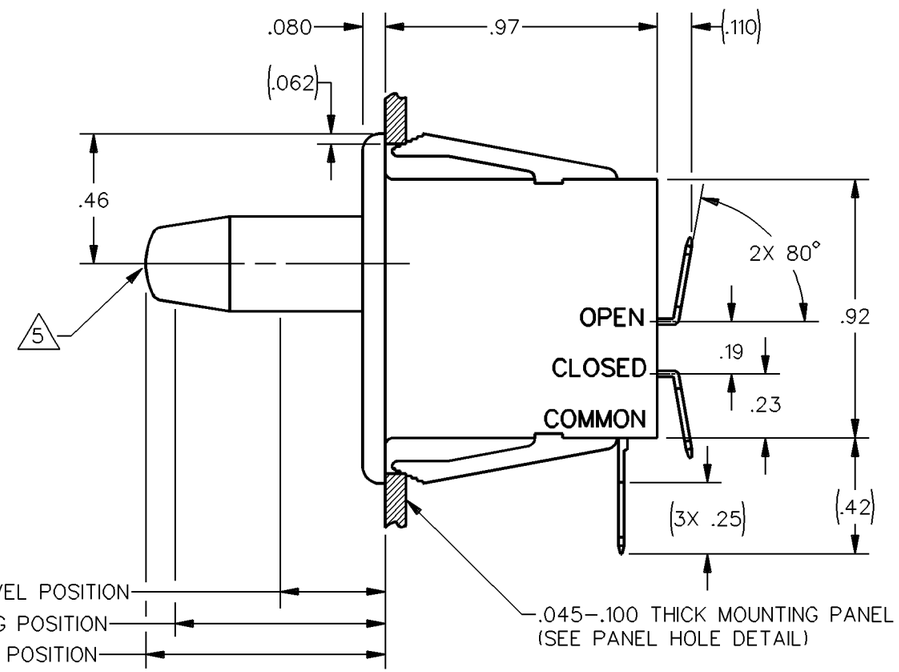

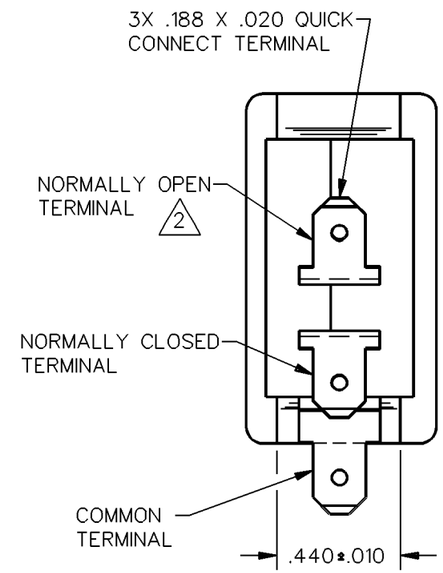

THIS DRAWING COVERS A PROPRIETARY ITEM AND IS THE PROPERTY OF MICRO SWITCH. A DIVISION OF HONEYWELL. THIS DRAWING IS NOT TO BE COPIED OR USED WITHOUT THE APPROVAL OF MICRO SWITCH

THIRD ANGLE PROJECTION

SCALE 2 TO 1

DO NOT SCALE PRINT

CHARACTERISTICS

OPERATING FORCE – – – – – 15 OZ MAX
RELEASE FORCE– – – – – – – 3 OZ MIN
DIFFERENTIAL TRAVEL – – .045 APPROX
OVERTRAVEL – – – – – – – – .375 MIN
PLUNGER FORCE AT .375 OVERTRAVEL 21 OZ MAX

ELECTRICAL DATA

CONTACT ARRANGEMENT
S P D T

L22
1A 125 VAC

UL CSA

UNLESS OTHERWISE SPECIFIED TOLERANCES ARE

ONE PLACE	(.0)	±.030
TWO PLACE	(.00)	±.015
THREE PLACE	(.000)	±.005
ANGLES		± 5°

WEIGHT

NOTES
1 – WHITE PLASTIC CASE AND PLUNGER
2 FLAG STYLE QUICK CONNECT RECEPTACLE REQUIRED FOR NORMALLY OPEN TERMINAL IF SWITCH IS WIRED BEFORE MOUNTING
3 NOMINAL CUTOUT DIMENSION FOR PANELS BETWEEN .045 AND .100 SHOULD BE INTERPOLATED BETWEEN 1.115 AND 1.125
4 SWITCH HAS GOLD ALLOY CONTACTS
5 PUSH TO OPERATE – MOMENTARY

ANSI Y14.5M–1982 APPLIES

CATALOG LISTING 1DM79
ISSUE M 5
REPLACES
RELEASE NO. PR–5529
CHECK
REVISIONS
A CO 77328 DHD 17 JUL 92
CHECK
CHECK
CHECK
DRAWN DHD 17 JUL 92
DDM/CAD

Downloaded from Arrow.com.