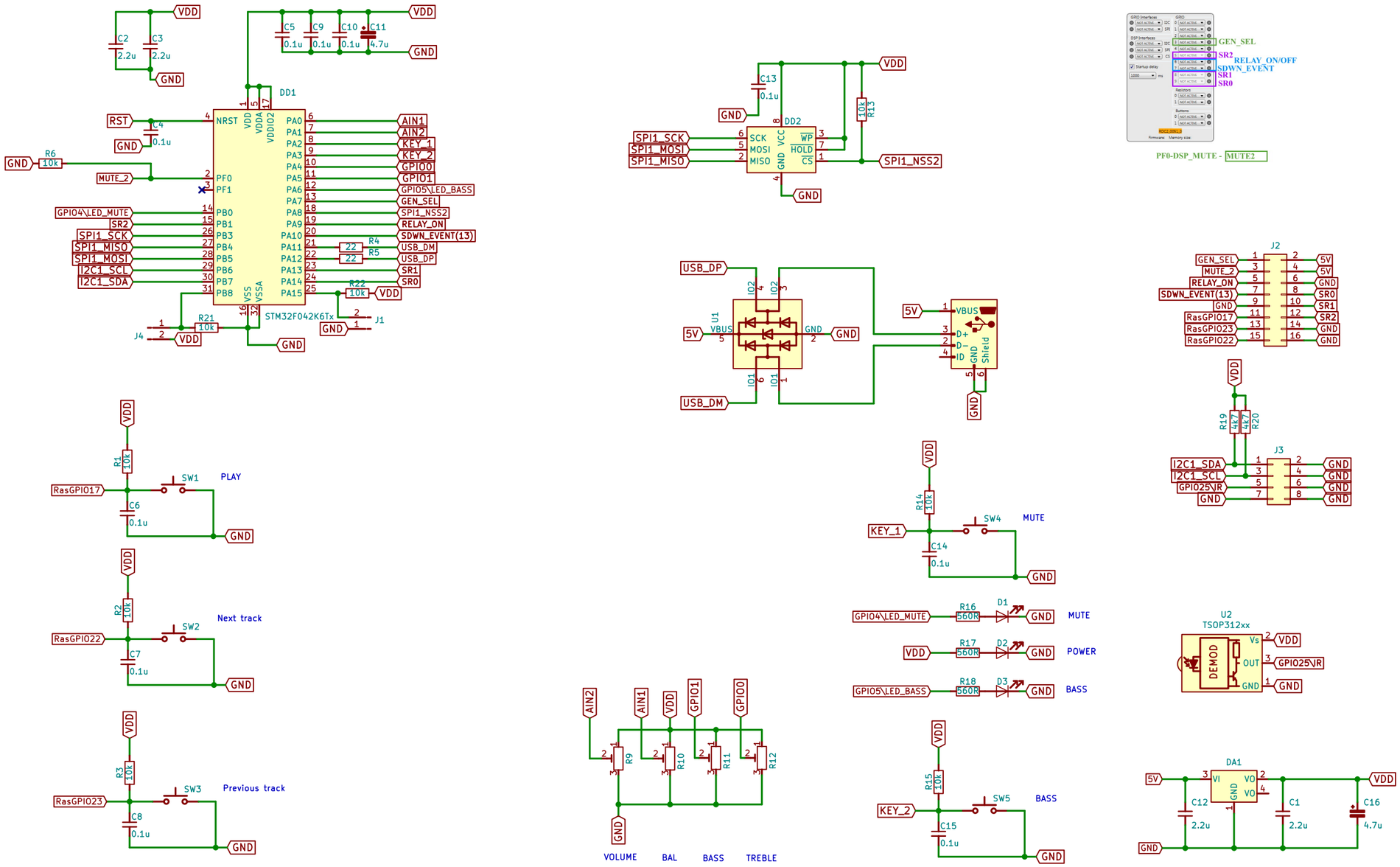

STM32F042K6Tx
DD1
DD2
J1
J2
J3
J4
U1
U2
TSOP312xx
DEMOD
DA1
PLAY
Next track
Previous track
MUTE
POWER
BASS
VOLUME
BAL
BASS
TREBLE
PF0-DSP_MUTE - MUTE2
GEN_SEL
SR2
RELAY_ON/OFF
SDWN_EVENT
SR1
SR0