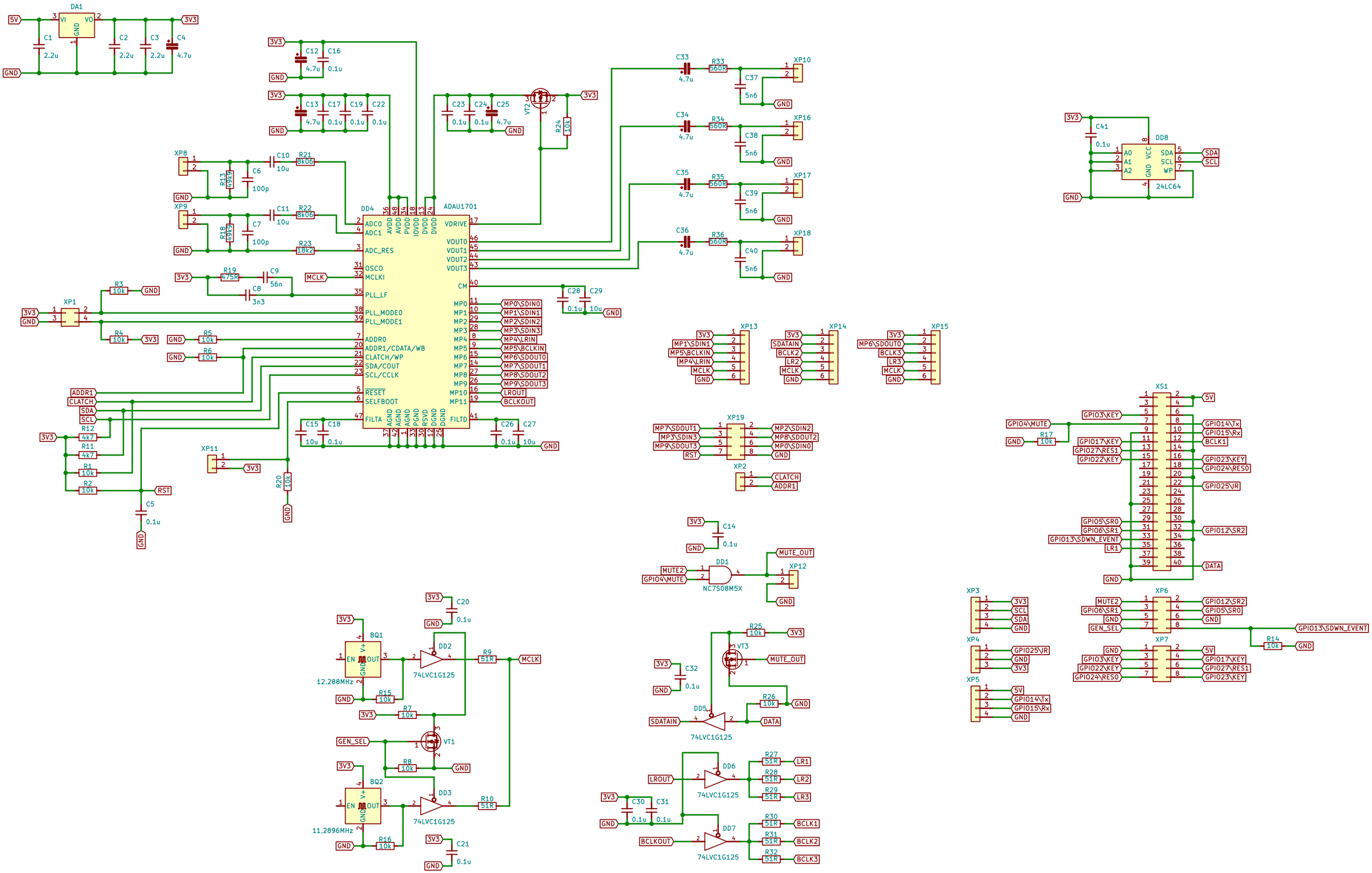
DA1
VI
VO
GND
5V
3V3
C1 2.2u
C2 2.2u
C3 2.2u
C4 4.7u
C12 4.7u
C16 0.1u
C13 4.7u
C17 0.1u
C19 0.1u
C22 0.1u
C23 0.1u
C24 0.1u
C25 4.7u
VT2
R24 10k
XP8
XP9
R13 49k9
R18 49k9
C6 100p
C7 100p
C10 10u
C11 10u
R21 8k06
R22 8k06
R23 18k2
R19 475R
C9 56n
C8 3n3
MCLK
DD4
ADAU1701
ADC0
ADC1
ADC_RES
OSCO
MCLKI
PLL_LF
PLL_MODE0
PLL_MODE1
ADDR0
ADDR1/CDATA/WB
CLATCH/WP
SDA/COUT
SCL/CCLK
RESET
SELFBOOT
FILTA
VDRIVE
VOUT0
VOUT1
VOUT2
VOUT3
CM
MP0
MP1
MP2
MP3
MP4
MP5
MP6
MP7
MP8
MP9
MP10
MP11
FILTD
MP0\SDIN0
MP1\SDIN1
MP2\SDIN2
MP3\SDIN3
MP4\LRIN
MP5\BCLKIN
MP6\SDOUT0
MP7\SDOUT1
MP8\SDOUT2
MP9\SDOUT3
LROUT
BCLKOUT
C28 0.1u
C29 10u
C15 10u
C18 0.1u
C26 0.1u
C27 10u
XP1
R3 10k
R4 10k
R5 10k
R6 10k
ADDR1
CLATCH
SDA
SCL
R12 4k7
R11 4k7
R1 10k
R2 10k
RST
C5 0.1u
XP11
R20 10k
C33 4.7u
R33 560R
C37 5n6
XP10
C34 4.7u
R34 560R
C38 5n6
XP16
C35 4.7u
R35 560R
C39 5n6
XP17
C36 4.7u
R36 560R
C40 5n6
XP18
C41 0.1u
DD8
A0
A1
A2
VCC
SDA
SCL
WP
24LC64
XP13
MP1\SDIN1
MP5\BCLKIN
MP4\LRIN
MCLK
XP14
SDATAIN
BCLK2
LR2
XP15
MP6\SDOUT0
BCLK3
LR3
XP19
MP7\SDOUT1
MP3\SDIN3
MP9\SDOUT3
RST
XP2
XS1
GPIO4\MUTE
R17 10k
GPIO3\KEY
GPIO17\KEY
GPIO27\RES1
GPIO22\KEY
GPIO5\SR0
GPIO6\SR1
GPIO13\SDWN_EVENT
LR1
GPIO14\Tx
GPIO15\Rx
BCLK1
GPIO23\KEY
GPIO24\RES0
GPIO25\IR
GPIO12\SR2
DATA
C14 0.1u
DD1
NC7S08M5X
MUTE2
MUTE_OUT
XP12
XP3
XP4
XP5
XP6
XP7
R14 10k
R25 10k
VT3
C32 0.1u
R26 10k
DD5
74LVC1G125
DATA
C20 0.1u
BQ1
EN
OUT
V+
GND
12,288MHz
R15 10k
DD2
R9 51R
R7 10k
VT1
GEN_SEL
R8 10k
BQ2
11,2896MHz
R16 10k
DD3
R10 51R
C21 0.1u
DD6
R27 51R
R28 51R
R29 51R
C30 0.1u
C31 0.1u
DD7
R30 51R
R31 51R
R32 51R