EM271

Multi-channel power analyzer

Description

Multi-load power analyzer for single or three-phase systems installable on panels or DIN rails. Manages current input via two groups of split-core current sensors connected with RJ-11 connectors. The EM271 is equipped with a LCD display with controls to display measurements and configure the system, a RS485 port and two pulse outputs or two RS485 ports for daisy chain connections. Thanks to the SUM function, it also displays total load consumption values.

Benefits

- **Reduced installation time and errors.** Equipped with detachable terminals for all connections, with possibility of requesting pre-wired cables (optional). Connected to two groups of split-core current sensors with two cables fitted with RJ-11 connectors. For connections in cascade of multiple EM271s the voltage reference is required only once.
- **Installation flexibility.** It can be installed in new or existing single- and three-phase systems. Suitable for panel or DIN rail mounting .
- **Granular analysis.** It provides total measurements or single load measurements (up to 2 three-phase loads or up to 6 single-phase loads).
- **Specific software.** The UCS proprietary configuration software enables rapid configuration and the display of all measurements. The software and subsequent updates are free.
- **Tamper-proof.** Configuration access can be locked. The terminals and display can be sealed.
- **Self detection** of primary current of the TCDxM (the dedicated current transformers).

Applications

EM271 is connected directly to current sensors in switchboards for simultaneous monitoring of multiple singleor three-phase loads in low voltage systems.

Created for both commercial and industrial environments (e.g. data centers), this device guarantees quick and space-saving installations with just a few simple connections.

Suitable for retro-fit applications and for new installations where more flexibility is required.

Main functions

- Measurement of energy consumption and main electrical variables of single- or three-phase circuits.
- Display of single circuit measurements and total measurements.
- Transmission of data via serial communication.
- Transmission of power consumption via pulse output (optional).

Architecture

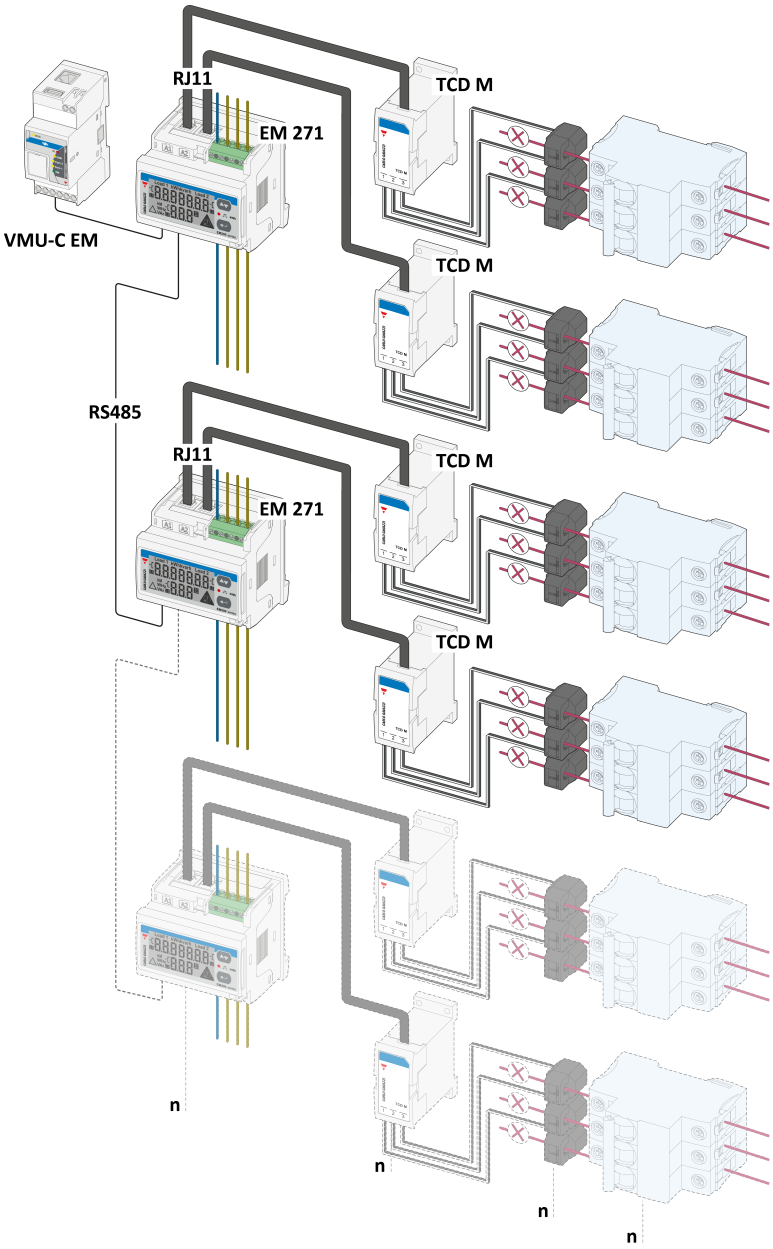

Main features

- Up to 2 three-phase loads or 6 single-phase loads managed simultaneously.
- Up to 400 A input current via pre-cabled groups of current sensors (TCDxM) or any primary current of current up to 10000 A sensor with 0.333 V secondary output (via connection adapter TCDMM).
- Three installation configurations: on DIN rails, mounted on panel of 72 x 72 or 96 x 96 (with optional adapter).
- Single load measurements: V, A, W/VA/var, kWh, kvarh. Total load measurements: W/VA/var, kWh, kvarh.
- Display of electrical variables: 3 digits. Display of energy meters: 7 digits.

- Accuracy: better than a combination of a class 1 meter and a class 0.5 current transformer.
- Easy connection function.
- Up to 20 analyzers EM271 connected in cascade.
- RS485 port.
- Optional outputs: additional RS485 port for chain connection or two pulse outputs.
- Self power supply via voltage inputs.
- Detachable terminals and sealable terminal caps.
- Configuration via keypad or UCS configuration software.

Structure

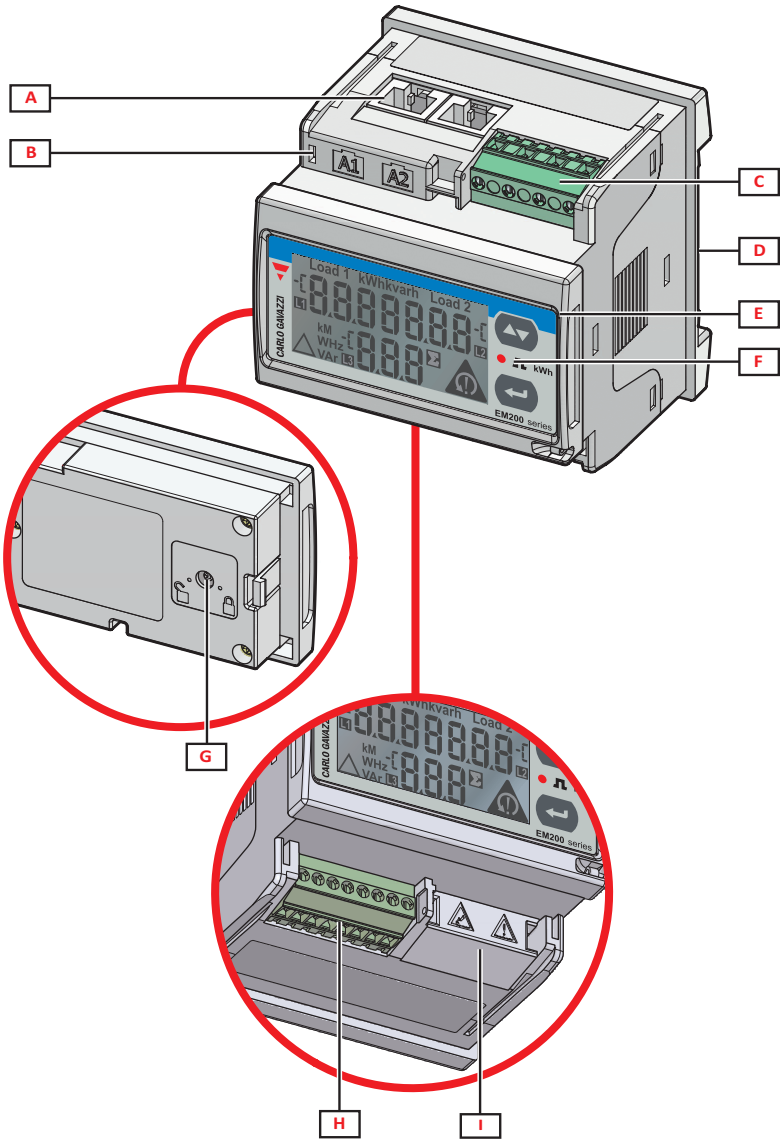

Area	Description
A	RJ-11 connector for connection to transformer block.
B	Power supply status LED.
C	Detachable voltage input terminals.
D	Area for mounting on DIN rail or for housing the LCD display in the case of panel mounting.
E	LCD display and controls.
F	LED that blinks with frequency proportional to active energy consumption, see "LED features".
G	Rotary selector to lock configuration.
H	RS485 port terminals and pulse outputs.
I	Plastic protection cover or terminals for voltage connection in cascade.

Features

General

Material	Noryl, self-extinguishing V-0 (UL 94)
Protection degree	Front: IP40, Terminals: IP20
Terminals	Type: detachable Maximum section: 1.5 mm^2, Torque: 0.2/0.25 Nm
Overvoltage category	Cat. III
Pollution degree	2
Noise rejection (CMRR)	100 dB, from 48 to 62 Hz
Insulation	See "Input and output insulation"
Mounting	DIN rail Panel 72 x 72, Panel 96 x 96 (with optional adapter)
Weight	400 g (packaging included)

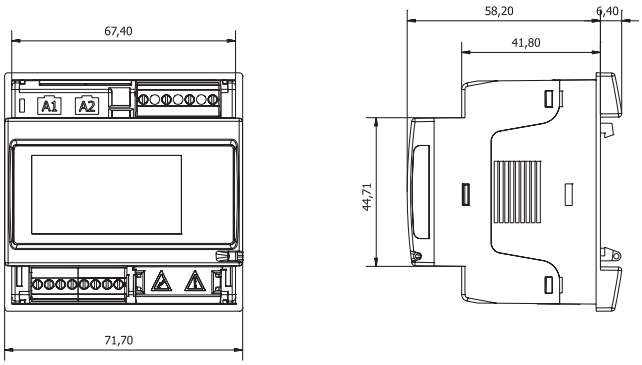

Fig. 1 *DIN rail*

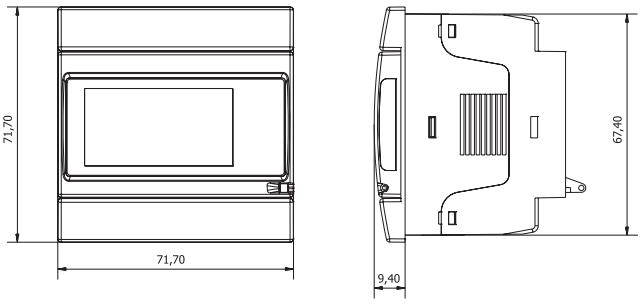

Fig. 2 *Panel 72 x 72*

Environmental specifications

Operating temperature	From -25 to +55 °C/from -13 to +131 °F
Storage temperature	From -30 to +70 °C/from -22 to 158 °F

Note*: R.H. < 90 % non-condensing @ 40 °C / 104 °F.*

Input and output insulation

Type	Voltage input and self power supply	Current inputs	Pulse outputs	RS485 port
Voltage input and self power supply	-	Reinforced *	Double **	Double **
Current inputs	Reinforced *	-	Double **	Double **
Pulse outputs	Double **	Double **	-	-
RS485 port	Double **	Double **	-	-

*By limiting impedance
**2.5 kV ac 1 min (4 kV pk 1.2/50 µs)+ limiting impedance

Conformity

Directives	2014/30/EU (EMC - Electro Magnetic Compatibility) 2011/65/EU (Electric-electronic equipment hazardous substances)
Standards	Electromagnetic compatibility (EMC) - emissions and immunity: EN 62052-11 Electrical safety: EN 61010-1 Pulse output: IEC 62053-31, DIN 43864 Metrology: EN62053-21, EN62053-23
Approvals	CE c UL us LISTED UK CA

Electrical specifications

Electrical system and circuits

Managed electrical system	Single-phase (2-wire) Three-phase without neutral (3-wire) Three-phase with neutral (4-wire)
Number of circuits managed	Single-phase systems: up to 6 single-phase loads Three-phase systems: up to 2 three-phase circuits or up to 6 single-phase loads

Voltage inputs

	MV5	MV6
Voltage connection	Direct or via VT	
Rated voltage L-N (from Un min to Un max)	From 160 to 240 V	From 57.7 to 133 V
Rated voltage L-L (from Un min to Un max)	From 277 to 415 V	From 100 to 230 V

	MV5	MV6
Voltage tolerance	-10%, +10%	
Overload	Continuous: 1.2 Un max For 500 ms: 2 Un max	
Input impedance	1600 kΩ	
Frequency	From 45 to 65 Hz	

Current inputs

Current connection	Only via transformer block TCDxM or TCDMM
Rated current (In)	60 A: TCD0M 100 A: TCD1M 200 A: TCD2M 400 A: TCD3M Up to 10000 A: TCDMM
Minimum current (Imin)	0.02 In
Maximum current (Imax)	1.2 In
Start-up current (Ist)	0.002 In
Overload	Continuous: 1.2 In For 500 ms: 2 In
Input impedance	< 0.2 VA

Power supply

Power supply	Self powered, between L2 and L3
Consumption	2 W, ≤ 4 VA

Measurements

Method	TRMS measurements of distorted waveforms
Sampling	1600 samples/s @50 Hz 1900 samples/s @60 Hz

Available measurements

Three-phase loads

Energy	Active imported Reactive imported
Current	Phase 1 Phase 2 Phase 3

Voltage	Phase-phase Phase-neutral
Active power	Total load Average (dmd) Maximum dmd
Apparent power	Total load Average (dmd) Maximum dmd
Reactive power	Total load
Power factor	Total load

Single-phase loads

Energy	Active imported
Current	Phase
Voltage	Phase-neutral
Active power	Total load Average (dmd) Maximum dmd
Reactive power	Phase
Power factor	Phase

Measurement accuracy

EM271

Current	
From 0.05 In to Imax	±(0.5% rdg)
From 0.02 In to 0.05 In	±(1.0% rdg)
Phase-phase voltage	
From (Un min -10%) to (Un max +10%)	±(0.5% rdg)
Phase-neutral voltage	
From (Un min -10%) to (Un max +10%)	±(1% rdg)
Active power (PF=1)	
From 0.05 In to Imax	±(1% rdg)
From 0.02 In to 0.05 In	±(1.5% rdg)
Active power (PF=0.5L, 0.8C)	
From 0.1 In to Imax	±(1% rdg)
From 0.05 In to 0.1 In	±(1.5% rdg)
Reactive power (sinϕ=1)	
From 0.05 In to Imax	±(2% rdg)
From 0.02 In to 0.05 In	±(2.5% rdg)

Current	
Reactive power (sinϕ=0.5 L or C)	
From 0.1 In to Imax	±(2% rdg)
From 0.05 In to 0.1 In	±(2.5% rdg)
Active energy	
Equivalent to class 1 (EN62053-21)	
Reactive energy	
Equivalent to class 2 (EN62053-23)	
Frequency	
From 45 to 65 Hz	±1 Hz

EM271+TCD0M, TCD1M, TCD2M or TCD3M

Current	
From 0.2 In to Imax	±(0.75% rdg)
From 0.05 to 0.2 In	±(1% rdg)
From 0.02 In to 0.05 In	±(1.25% rdg)
Active power (PF=1)	
From 0.2 In to Imax	±(1.25% rdg)
From 0.05 to 0.2 In	±(1.5% rdg)
From 0.02 In to 0.05 In	±(2% rdg)
Reactive power (sinϕ=1)	
From 0.2 In to Imax	±(2.25% rdg)
From 0.05 to 0.2 In	±(2.5% rdg)
From 0.02 In to 0.05 In	±(3% rdg)

Display

Type	LCD
Refresh time	1 s
Description	2 rows: 1st: 7 digits (7 mm) 2nd: 3 digits (7 mm)
Variable readout	Electrical variables: 3 digits, min: 0.00, max: 999 Energy meters: 7 digits, min: 0.0, max: 9 999 999

Digital ouputs

Connection type	Detachable terminals
Maximum number of outputs	2

Type	Opto-mosfet
Function	Pulse output. Each output transmits the consumption of a single three-phase load or the total consumption of three single-phase loads.
Features	V_{ON}: 2.5 V ac/dc, 70 mA max V_{OFF}: 40 V ac/dc max
Configuration parameters	Pulse weight (from 0.01 to 9.99 kWh per pulse) Pulse duration (40 or 100 ms)
Configuration mode	Via keypad or UCS software

RS485 port

Protocol	Modbus RTU
Devices on the same bus	Max 160 (1/5 unit load)
Communication type	Multidrop, bidirectional
Connection type	Detachable terminals, 2 wires, maximum distance 1000 m
Configuration parameters	Modbus address (from 1 to 247) Baud rate (9.6 / 19.2 / 38.4 kbps) Parity (None / Even)
Configuration mode	Via keypad or UCS software

Special functions

- Display of total loads connected in relation to energy consumption and power measurements (SUM function)
- Measurements independent from direction of current (Easy connection function)
- Resetting of active energy meters of single and total loads
- Resetting of maximum values within set active and apparent power interval
- Password protected settings menu

Connection Diagrams

***Note**: for three-phase systems without neutral (3 wires) do not consider the connection to neutral **N**.*
***Note**: fuses F of 315 mA, if required by local law.*

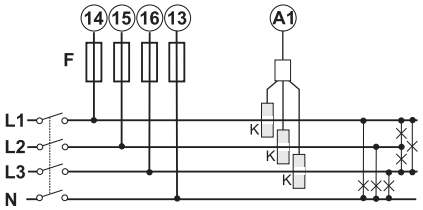

***Fig. 3** Three-phase system, one three-phase load.*

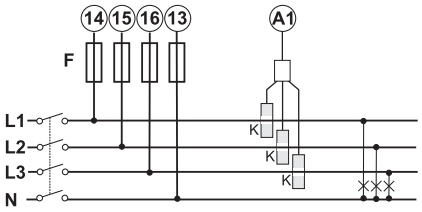

***Fig. 4** Three-phase system, three single-phase loads.*

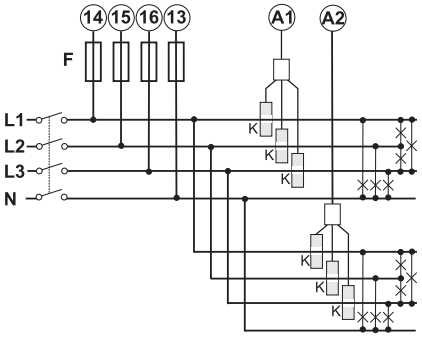

***Fig. 5** Three-phase system, two three-phase loads.*

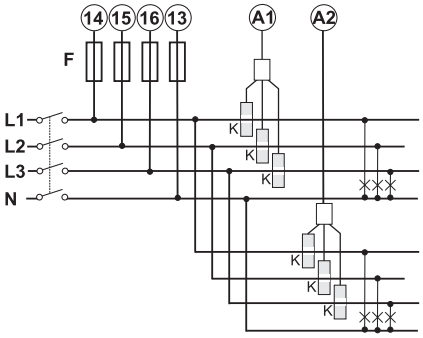

***Fig. 6** Three-phase system, six single-phase loads.*

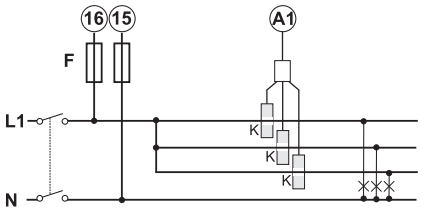

***Fig. 7** One-phase system, three single-phase loads.*

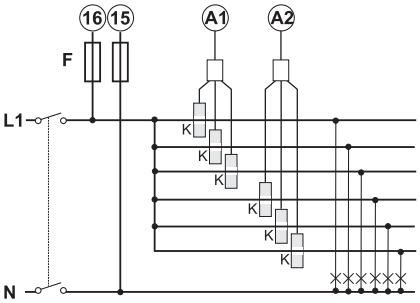

***Fig. 8** One-phase system, six single-phase loads.*

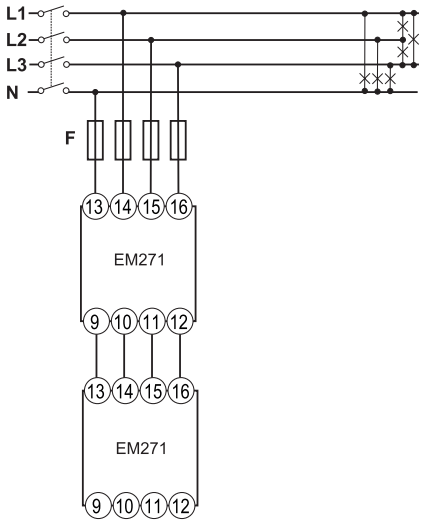

Fig. 9 *Example of connection of multiple EM271s in cascade.*

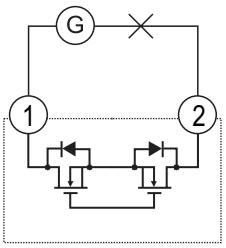

Fig. 10 *Pulse output 1.*

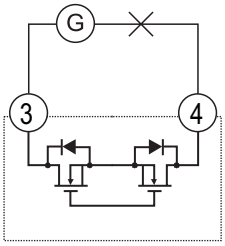

Fig. 11 *Pulse output 2.*

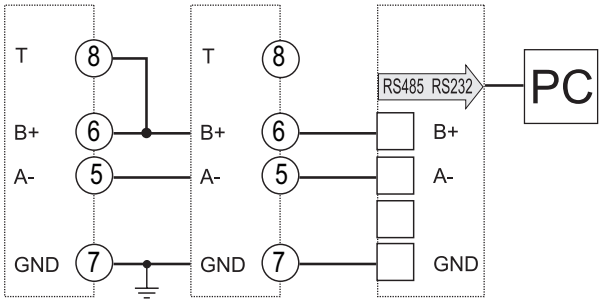

Fig. 12 *RS485 port.*

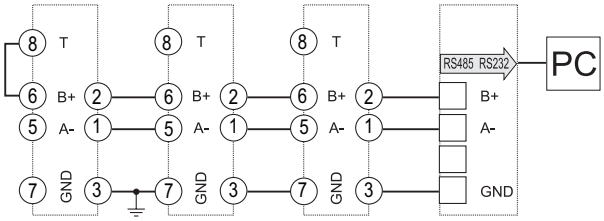

Fig. 13 *Double RS485 port for daisy chain connection.*

References

Order code

EM271 72D MV ☐ 3X ☐☐ (16 total characters)

Enter the code, replacing the symbol ☐ with the selected option (e.g.: EM270 72D MV5 3X **O**S **X**).

Code	Options	Description
E	-	-
M	-	-
2	-	-
7	-	-
1	-	-
7	-	-
2	-	-
D	-	-
M	-	-
V	-	-
☐	5	230 V L-N, 400 V L-L ac, connection via TCD_M or TCDMM
	6	120 V L-N, 230 V L-L ac, connection via TCD_M or TCDMM
3	-	-
X	-	-
☐	OS	RS485 port and double digital output
	2S	Double RS485 port for daisy chain connection
☐	X	Standard configuration
	N	"Naked" configuration. With respect to the standard configuration, the "naked" version does NOT include: detachable terminals for voltage connections, detachable terminals for daisy chain connection via RS485 port (only for option **2S**).

Accessories: order codes

Code	Options	Description
EM270WS V 1T ☐	Replacing the symbol ☐ with the cable length. Lengths available: **30, 60, 90, 150, 200** cm.	Pre-wired cables for voltage connection (one terminal block).
EM270WS V 2T ☐	Replacing the symbol ☐ with the cable length. Lengths available: **30, 60, 90, 150, 200** cm.	Pre-wired cables for voltage connection (two terminal blocks).
EM270WS S 2T ☐	Replacing the symbol ☐ with the cable length. Lengths available: **60, 90, 120, 180, 230** cm.	Pre-wired cables for RS485 connection (two terminal blocks).
EM270WS T V	-	20 detachable terminal blocks for voltage connections.
EM270WS T C	-	20 plastic protection covers for voltage output.
EM270WS T S	-	20 detachable terminal blocks for daisy chain connection of RS485 port.
EM200-96 ADAPTER	-	Adapter to 96 x 96 panel mounting.

Further reading

Information	Document	Where to find it
Instruction manual	Instruction manual - EM271	www.productselection.net

CARLO GAVAZZI compatible components

Purpose	Component name/code key	Notes
Current measurement accessories (mandatory)	TCD0M TCD1M TCD2M TCD3M	See next chapter
Configure analyzer via desktop application	UCS configuration software	Available for free download at: www.productselection.net
Monitor data from several analyzers	VMU-C EM	See relevant datasheet

TCD_M family

TCD0M, TCD1M, TCD2M, TCD3M for EM271/ET272

Benefits

- 3 split core current sensors
- Primary current from 60 A to 400 A (depends on the model)
- Hole diameter from 9.6 mm to 20.5 mm (depends on the model)
- Connection to the EM271/ET272 with cable with RJ-11 connector
- DIN rail mounting
- Primary current self-detection

Description

3-channel split core current transformer block for power analyzer EM271/ET272.
It manages primary current from 60 A to 400 A (depends on the model) and the value is read automatically by the EM271/ET272 to eliminate the need for configuration and calibration by the user.
It is equipped with RJ-11 connectors for simple connection to the EM271/ET272.

Main functions

- Conversion of current for input to the power analyzer EM271/ET272.

Structure

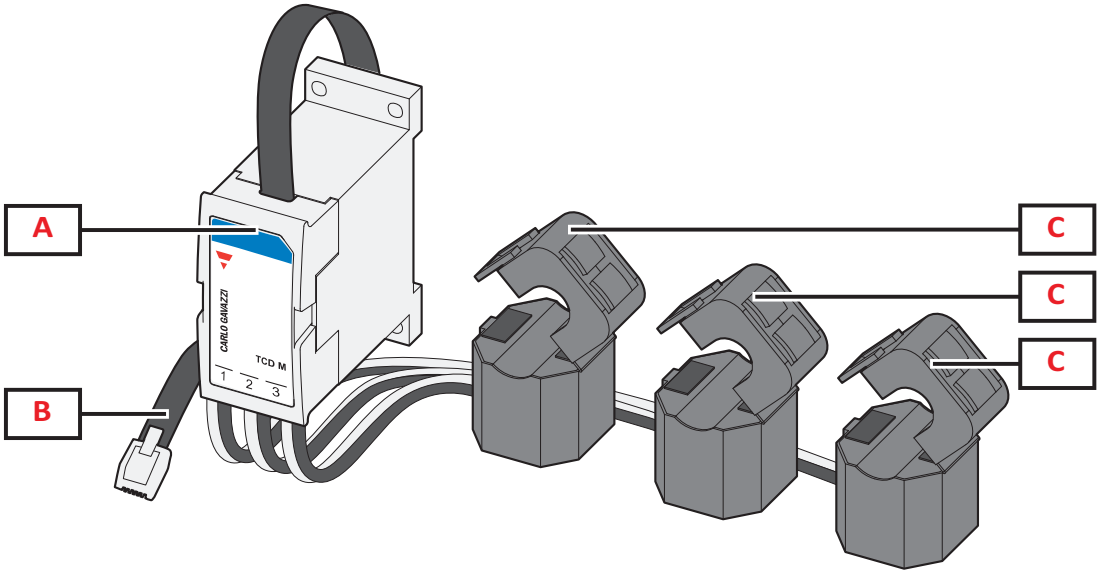

Area	Description
A	Integrator
B	Cable with RJ-11 connectors for connection to the EM271/ET272
C	Split core current sensors

Features

General

Material	PC, PA66
Protection degree	IP20
Terminals	RJ-11 connector
Overvoltage category	Cat. III
Pollution degree	2
Insulation	60s 1500 V ac (RJ connectors to housing)
Mounting	DIN rail
Weight (packaging included)	TCD0M: 290 g TCD1M: 360 g TCD2M: 535 g TCD3M: 885 g

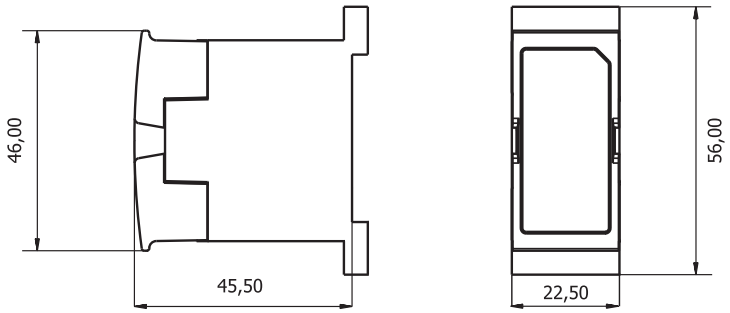

Fig. 14 *Integrator (mm)*

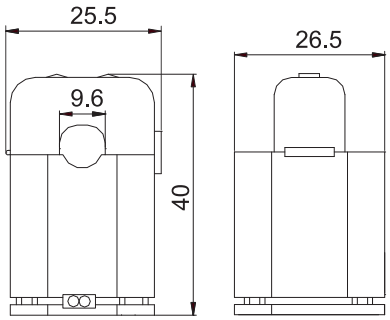

Fig. 15 *TCD0M (mm)*

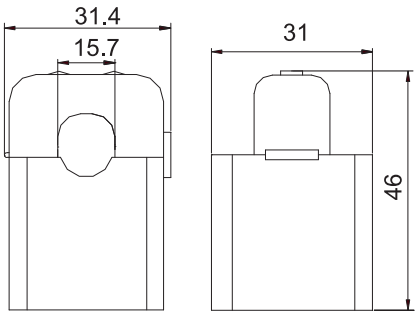

Fig. 16 *TCD1M (mm)*

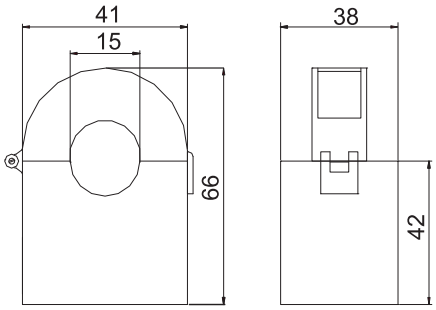

Fig. 17 TCD2M (mm)

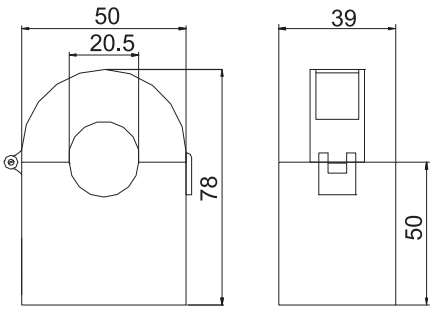

Fig. 18 TCD3M (mm)

Environmental specifications

Operating temperature	From -25 to +55 °C/from -13 to +131 °F
Storage temperature	From -30 to +70 °C/from -22 to 158 °F

Electrical specifications

Primary current (In)	60 A: TCD0M 100 A: TCD1M 200 A: TCD2M 400 A: TCD3M
Maximum current (continuous)	1.2 In
Maximum system voltage	0.72 kV ac
Frequency	From 45 to 65 Hz
Accuracy	0.5%
Phase error	≤4°

Connection Diagrams

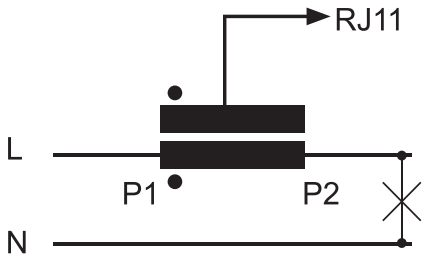

Fig. 19 *Current connection*

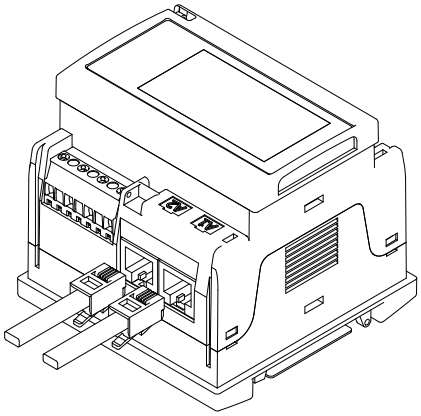

Fig. 20 *RJ11 connections*

References

TCD □□ 80 CM X

Enter the code, replacing the symbol □ with the selected option (e.g.: TCD 0 M 60 80 CM X).

Code	Options	Description
T	-	-
C	-	-
D	-	-
□	0M60	60 A Primary current
	1M100	100 A Primary current
	2M200	200 A Primary current
	3M400	400 A Primary current
8	-	-
0	-	-
C	-	-
M	-	-
X	-	-

Further reading

Information	Document	Where to find it
Instruction manual		www.productselection.net

CARLO GAVAZZI compatible components

Purpose	Component name/code key	Notes
Measure and display consumption of connected circuits	EM271	-
Measure and display consumption of connected loads	ET272	-

TCDMM

333 mV 3-phase adapter for EM271 / ET272

Benefits

- Suitable for 3 current sensors (0.333 V)
- Primary current up to 10000 A
- Connection to the EM271/ET272 with cable with RJ-11 connector
- DIN rail mounting
- Screwless terminals

Main functions

- Conversion of current for input to the power analyzer EM271/ET272.

Description

3-phase adapter for power analyzer EM271/ET272.
This manages 3 current sensor (0.333 V output) and the primary value is set by the user via keypad or via software.
It is equipped with RJ-11 connectors for simple connection to the EM271/ET272.

Structure

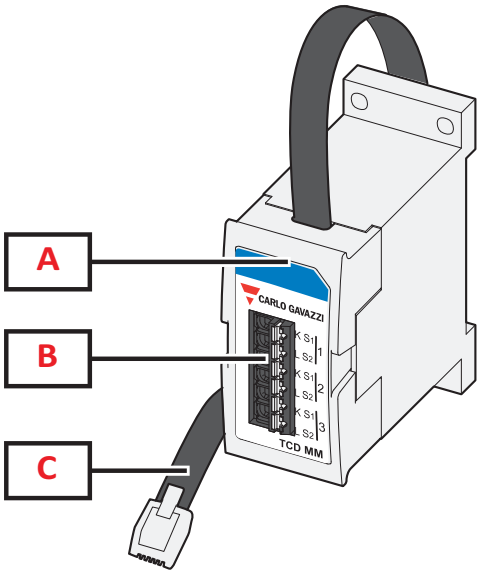

Area	Description
A	Integrator
B	Push-in wire connector
C	Cable with RJ-11 connectors for connection to the EM271/ET272

Features

General

Material	PC, PA66
Protection degree	IP20
Terminals	RJ-11 connector
Overvoltage category	Cat. III
Pollution degree	2
Mounting	DIN rail
Weight (packaging included)	80 g

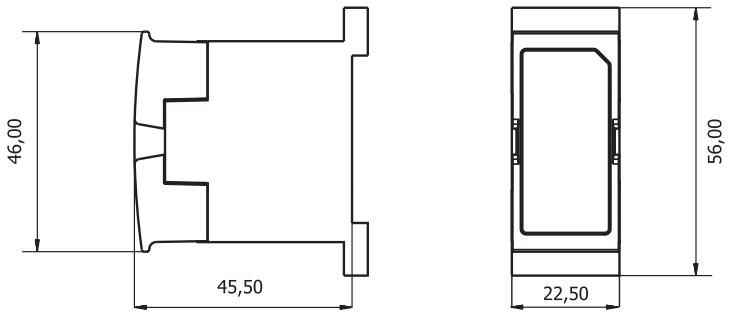

Fig. 21 *(mm)*

Environmental specifications

Operating temperature	From -25 to +55 °C/from -13 to +131 °F
Storage temperature	From -30 to +70 °C/from -22 to 158 °F

Electrical specifications

Primary current (In)	3x 0.333V
Maximum current (continuous)	1.2 In
Maximum system voltage	0.72 kV ac
Frequency	From 45 to 65 Hz

Connection Diagrams

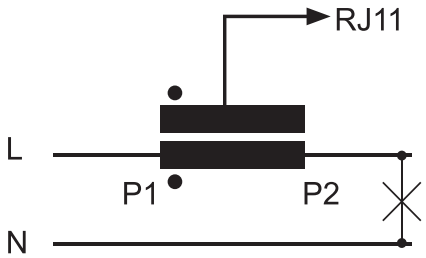

Fig. 22 *Current connection*

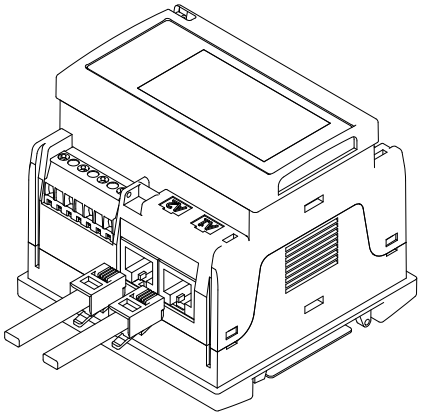

Fig. 23 *RJ11 connections*

References

Order code

TCDMM XXX80CM X

Further reading

Information	Document	Where to find it
Instruction manual		www.productselection.net

CARLO GAVAZZI compatible components

Purpose	Component name/code key	Notes
Measure and display consumption of connected loads	EM271	-
Current sensors 0.333 V secondary output	CTV1X, CTV2X, CTV3X, CTV4X, CTV8X	-
Measure and display consumption of connected circuits	ET272	-