CONDUCTIVE POLYMER ALUMINUM SOLID ELECTROLYTIC CAPACITORS

nichicon

LF Radial Lead Type, Standard series

High Ripple Current | Low Impedance | For High Frequency | Anti-Solvent Feature

- Low ESR, High ripple current.
- Load life of 2000 hours at 105°C.
- Radial lead type :
  Lead free flow soldering condition correspondence.
- Compliant to the RoHS directive (2002/95/EC).

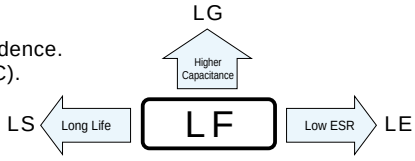

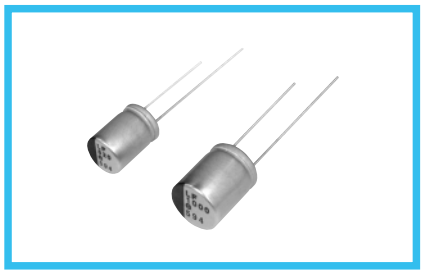

■Specifications

Item	Performance Characteristics
Category Temperature Range	−55 to +105°C
Rated Voltage Range	2.5 to 25V
Rated Capacitance Range	6.8 to 1500μF
Capacitance Tolerance	±20% at 120Hz, 20°C
Tangent of loss angle (tan δ)	Less than or equal to the specified value at 120Hz, 20°C
ESR (※1)	Less than or equal to the specified value at 100kHz, 20°C
Leakage Current (※2)	Less than or equal to the specified value. After 2 minutes' application of rated voltage at 20°C
Temperature Characteristics (Max.Impedance Ratio)	Z+105°C / Z+20°C ≦ 1.25 (100kHz) Z−55°C / Z+20°C ≦ 1.25
Endurance	The specifications listed at right shall be met when the capacitors are restored to 20°C after the rated voltage is applied for 2000 hours at 105°C. Capacitance change: Within ± 20% of the initial capacitance value (※3) tan δ: 150% or less than the initial specified value ESR (※1): 150% or less than the initial specified value Leakage current (※2): Less than or equal to the initial specified value
Damp Heat (Steady State)	The specifications listed at right shall be met when the capacitors are restored to 20°C after the rated voltage is applied for 1000 hours at 60°C, 90% RH. Capacitance change: Within ± 20% of the initial capacitance value (※3) tan δ: 150% or less than the initial specified value ESR (※1): 150% or less than the initial specified value Leakage current (※2): Less than or equal to the initial specified value
Resistance to Soldering Heat	After soldering the capacitor under the soldering conditions prescribed here as preheat at 150 to 200°C for 60 to 180 seconds and peak temperature at 265°C for 10 seconds or less, the capacitor shall meet the specifications listed at right, provided that its temperature profile is measured at both of terminal ends facing the soldering side. Capacitance change: Within ± 10% of the initial capacitance value (※3) tan δ: 130% or less than the initial specified value ESR (※1): 130% or less than the initial specified value Leakage current (※2): Less than or equal to the initial specified value
Marking	Navy blue print on the case top

※1 ESR should be measured at both of the terminal ends closest to the capacitor body.
※2 Conditioning : If any doubt arises, measure the leakage current after the voltage treatment of applying DC rated voltage continuously to the capacitor for 120 minutes at 105°C.
※3 Initial value : The value before test of examination of resistance to soldering.

■Dimensions

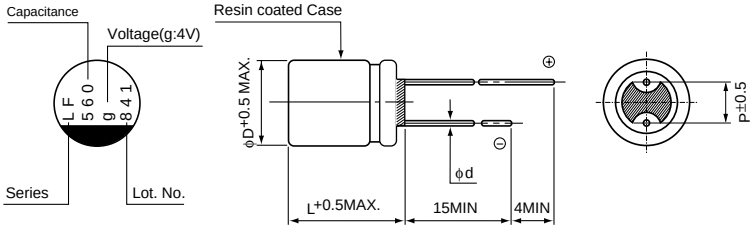

Type numbering system (Example : 4V 560μF)

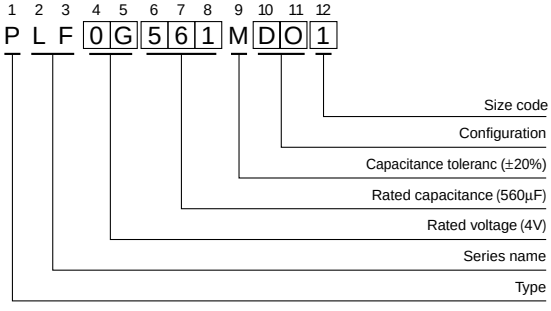

(mm)

Size	φ6.3×6L	φ6.3×9L	φ6.3×10.5L	φ8×7L	φ8×9L	φ8×12L	φ10×8L	φ10×10L	φ10×13L
φD	6.3	6.3	6.3	8.0	8.0	8.0	10.0	10.0	10.0
L	5.5	8.5	10.0	6.5	8.5	11.5	7.5	9.5	12.5
P	2.5	2.5	2.5	3.5	3.5	3.5	5.0	5.0	5.0
φd	0.45	0.6	0.5	0.6	0.6	0.6	0.6	0.6	0.6

Voltage

V	2.5	4	6.3	10	16	20	25
Code	e	g	j	A	C	D	E

Please refer to page 20 about the end seal configulation.

● Dimension table in next page.

LF series

■Standard Ratings

Rated Voltage (V)(code)	Surge Voltage (V)	Rated Capacitance (μF)	Case Size φD × L (mm)	tan δ	Leakage Current (μA)	ESR (mΩ) (at 100kHz 20°C)	Rated Ripple (mArms)	Part Number
2.5 (0E)	2.8	330	○ 6.3 × 9	0.08	500	7	5600	PLF0E331MCO8
		390	■ 6.3 × 10.5	0.08	195	20	3200	PLF0E391MDL4
		560	○ 6.3 × 9	0.08	500	7	5600	PLF0E561MCO8
		560	8 × 9	0.08	280	6	4800	PLF0E561MCO1
		680	▲ 8 × 9	0.08	340	7	4800	PLF0E681MCO6
		680	8 × 12	0.08	340	6	5700	PLF0E681MDO1
		820	○ 6.3 × 9	0.08	500	7	5600	PLF0E821MCO8
		820	▲ 8 × 9	0.08	410	7	5200	PLF0E821MCO6
		820	8 × 12	0.08	410	6	6200	PLF0E821MDO1
		1000	10 × 13	0.08	500	6	6500	PLF0E102MDO1
		1200	10 × 13	0.08	600	8	5300	PLF0E122MDO1
		1500	▲ 8 × 12	0.08	750	7	6100	PLF0E152MDO6
		1500	10 × 13	0.08	750	8	5500	PLF0E152MDO1
4 (0G)	4.6	270	○ 6.3 × 9	0.08	500	7	5600	PLF0G271MCO8
		270	■ 6.3 × 10.5	0.08	216	20	3200	PLF0G271MDL4
		390	■ 6.3 × 10.5	0.08	312	24	3300	PLF0G391MDL4
		560	▲ 8 × 9	0.08	448	7	5200	PLF0G561MCO6
		560	8 × 12	0.08	448	7	5500	PLF0G561MDO1
		680	8 × 12	0.08	544	6	6200	PLF0G681MDO1
		820	10 × 13	0.08	656	6	6500	PLF0G821MDO1
		1000	10 × 13	0.08	800	6	6640	PLF0G102MDO1
		1200	10 × 13	0.08	960	8	5600	PLF0G122MDO1
6.3 (0J)	7.2	220	■ 6.3 × 10.5	0.08	277	20	3200	PLF0J221MDL4
		330	■ 6.3 × 10.5	0.08	416	24	3300	PLF0J331MDL4
		470	▲ 8 × 9	0.08	592	7	5200	PLF0J471MCO6
		470	8 × 12	0.08	592	7	5500	PLF0J471MDO1
		680	10 × 13	0.08	857	6	6300	PLF0J681MDO1
10 (1A)	11.5	47	■ 6.3 × 10.5	0.08	94	25	2900	PLF1A470MDL4
		68	■ 6.3 × 10.5	0.08	136	25	2900	PLF1A680MDL4
		100	■ 6.3 × 10.5	0.08	200	25	2900	PLF1A101MDL4
		150	■ 6.3 × 10.5	0.08	300	25	2900	PLF1A151MDL4
		270	8 × 12	0.08	540	8	4900	PLF1A271MDO1
		470	10 × 13	0.08	940	7	5700	PLF1A471MDO1
		560	10 × 13	0.08	1120	7	5900	PLF1A561MDO1
		680	10 × 13	0.08	1360	7	6100	PLF1A681MDO1
16 (1C)	18.4	100	■ 6.3 × 10.5	0.08	320	24	2900	PLF1C101MDL4
		180	8 × 12	0.08	576	9	5000	PLF1C181MDO1
		270	8 × 12	0.08	864	9	5100	PLF1C271MDO1
		330	10 × 13	0.08	1056	9	6100	PLF1C331MDO1
		470	10 × 13	0.08	1504	9	6100	PLF1C471MDO1
20 (1D)	23	22	△ 6.3 × 6	0.12	88	50	1700	PLF1D220MCL2
		39	△ 8 × 7	0.12	156	45	2000	PLF1D390MCL2
		47	△ 8 × 7	0.12	188	45	2000	PLF1D470MCL2
		56	△ 10 × 8	0.12	224	40	2400	PLF1D560MCL2
		68	△ 10 × 8	0.12	272	40	2600	PLF1D680MCL2
		82	△ 10 × 8	0.12	328	40	2600	PLF1D820MCL2
		100	△ 8 × 12	0.12	400	22	3320	PLF1D101MDO2
		120	△ 10 × 10	0.12	480	35	2800	PLF1D121MCL2
		150	△ 10 × 13	0.12	600	20	4320	PLF1D151MDO2
25 (1E)	28.7	6.8	△ 6.3 × 6	0.12	85	80	1200	PLF1E6R8MCL2
		10	□ 6.3 × 6	0.12	125	65	1500	PLF1E100MCL7
		10	△ 8 × 7	0.12	125	60	1500	PLF1E100MCL2
		22	□ 8 × 7	0.12	275	50	1800	PLF1E220MCL7
		47	△ 10 × 13	0.12	588	30	3000	PLF1E470MDO2
		56	△ 10 × 13	0.12	700	28	3800	PLF1E560MDO2

Rated ripple current (mArms) at 105°C 100kHz

No marked, [1] will be put at 12th digit of type numbering system.
△ : In this case, [2] will be put at 12th digit of type numbering system.
■ : In this case, [4] will be put at 12th digit of type numbering system.
▲ : In this case, [6] will be put at 12th digit of type numbering system.
□ : In this case, [7] will be put at 12th digit of type numbering system.
○ : In this case, [8] will be put at 12th digit of type numbering system.

- Taping specifications are given in page 20, 21, 22.
- Please refer to page 3 for the minimum order quantity.