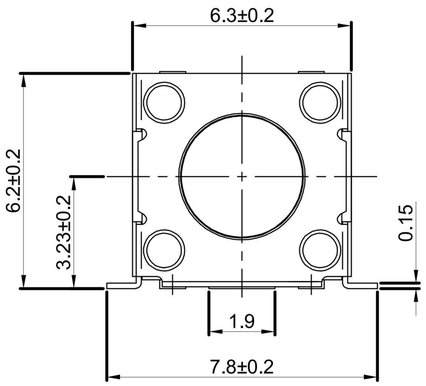


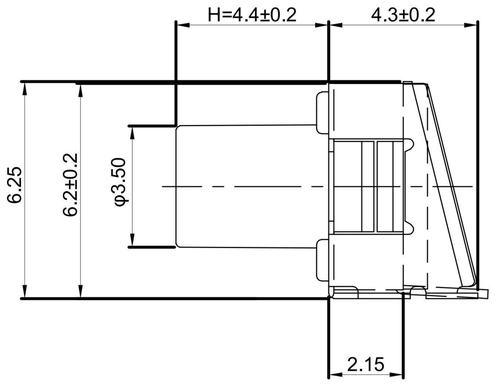


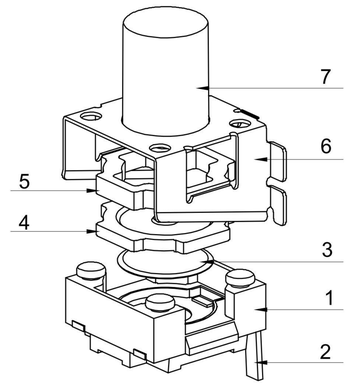

# GT-TA205B-H044-L3

**G-SWITCH**

**Operating Force**
A=180gf
B=250gf
C=100gf
D=360gf

**Switch Height（mm）**
H023=2.3mm
H044=4.4mm

**Switch lifetime (Force)**
L3=300,000 Cycles
L5=500,000 Cycles

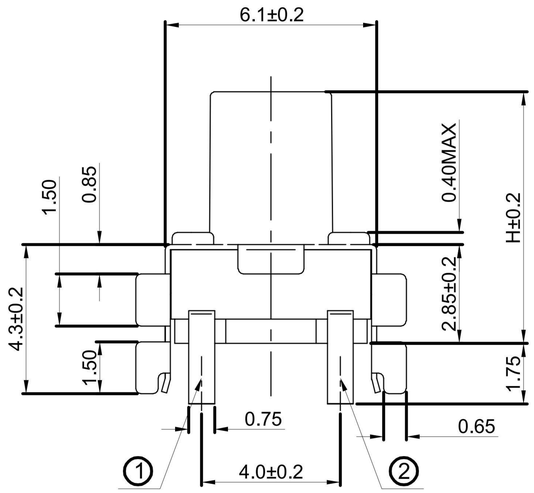


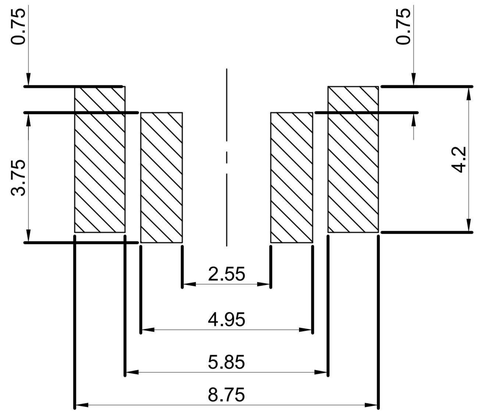


P.C.B LAND DIMENSION

CIRCUIT DIAGRAM

**G-Switch Specification:**

1.Operating temperature range：-40℃to+85℃
2.Rating：50mA.12V DC
3.Insulation resistance：100MΩ min.100V DC
4.Dielectric strength： 250V AC for 1 min
5.Contact resistance：100m Ω max.
6.Travel:0.3±0.1mm
7.Water Resistance：IPX7

| NO. | PART NAME | QTY | MATERIAL | REMARK |
|---|---|---|---|---|
| 7 | STEM | 1 | PPA | White |
| 6 | COVER | 1 | SUS | Ag plating |
| 5 | PRESS PAD | 1 | PPA | |
| 4 | DUST PAD | 1 | RUBBER | |
| 3 | CONTACT FORM | 1 | SUS | Ag plating |
| 2 | TERMINAL | 1 | H65 | Ag plating |
| 1 | BASE | 1 | PA6T | |

Pb Process Capable

RoHS Compliant 2002/95/EC

HALOGEN Compliant Halogen Free

| | | | | | |
|---|---|---|---|---|---|
| SCALE: 4:1 | UNIT: mm | Title: Horizontal Tact Switch 6.3×6.2×4.3+H4.4mm Smt Bracket Type IPX7 | | | |
| SIZE: A4 | | | | | |
| Unless otherwise General Tolerance: X. ±0.30, X.x ±0.20, X.xx ±0.15, X.xxx ±0.10, Angles ±3° | | Molde Code: GT-TA205B-H044-L3 | | | |
| | | DRAWN | CHECKED | APPROVED | DATE |
| | | Xia | Chen | Chen | 2022.11.01 |

品赞科技 b-Switch ®

REV: A0 SHEET: 1/1