AA602

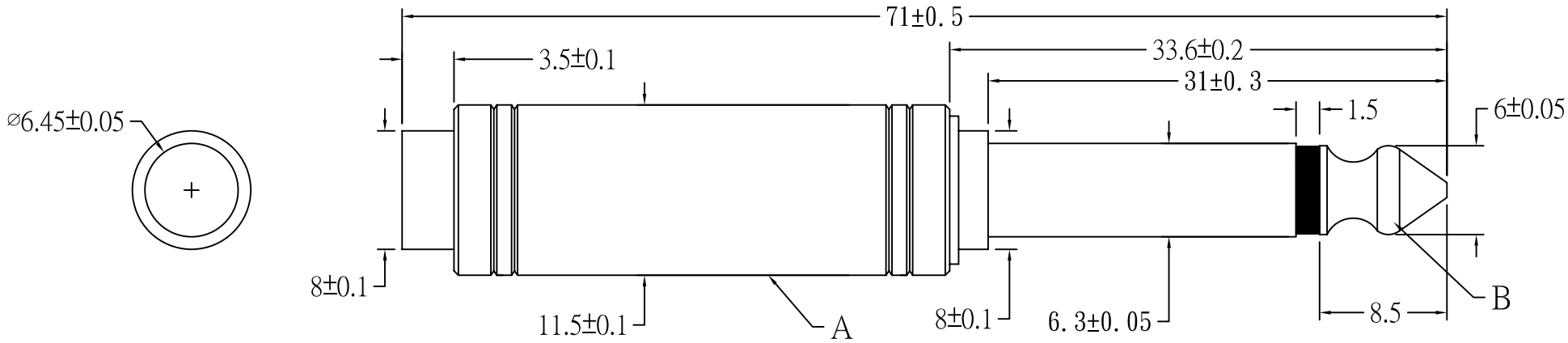

TITLE: 6.3MP TO 6.3SJ

Unless Specified,otherwise tolerance are +/-0.1mm; Remark:ROHS Requirement Applied(符合ROHS)

NO	Description	Unit	Materials	Finish/Color	PART NO.
A.	SHELL	1	BRASS	SD NI	
B.	6.3MP	1	BRASS	NI	
C.					
D.					
E.					

REV	DESCRIPTION	Issue	A	DATE:	2007/12/14
1					
2					
3					

Approved	
Check	
Drawn	李傑
Unit	M/M
Scale	2:1