THIS DRAWING IS UNPUBLISHED. RELEASED FOR PUBLICATION 2002
© COPYRIGHT 2002 - ALL RIGHTS RESERVED.

LOC	DIST
A1	-

REVISIONS

P	LTR	DESCRIPTION	DATE	DWN	APVD
	L4	ECR-14-014186	22SEP2014	SS	GM
	L5	ECR-16-013617	23SEP2016	KC	SH
	L6	ECR-16-014434	12OCT2016	KC	SH
	L7	ECR-17-008199	15JUNE2017	KC	PT

UP TO 0.75 mm^2 WIRE SIZE

-	-	-
A	15.7	15.7
CODING	X	Y

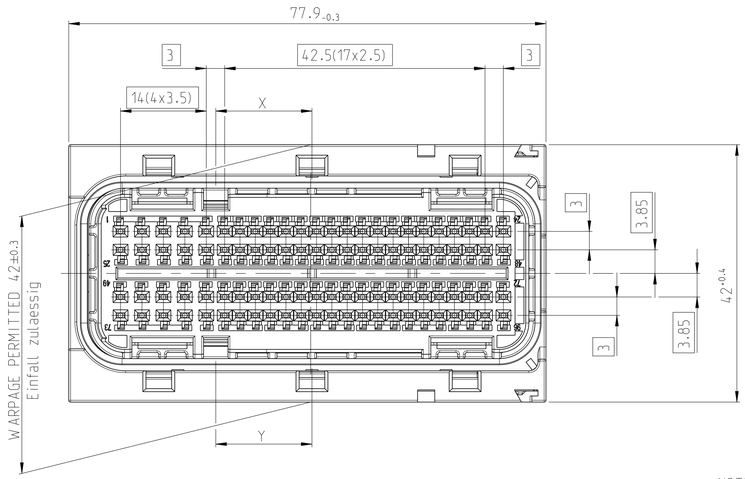

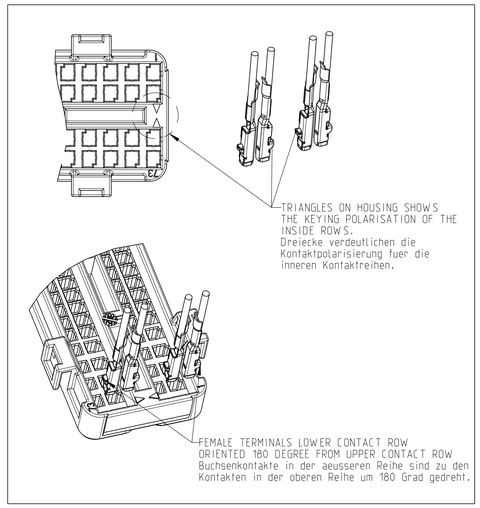

1x	PA66-GF25	96 POS. PCM CON. SLIDE RIGHT -	BLACK -	7
1x	PA66-GF25	96 POS. PCM CON. SLIDE LEFT -	BLACK -	6
1x	PBT-GF20	96 POS. PCM CON. COVER FOR FAMILY SEAL	BLACK -	5
1x	SILICONE	96 POS. PCM CON. FAMILY SEAL -	WHITE -	4
1x	SILICONE	96 POS. PCM CON. PERIPHERAL SEAL -	WHITE -	3
1x	PA66-GF35	96 POS. PCM CON. CONTACT HOUSING -	BLACK -	2
1x	PA66-GF35	96 POS. PCM CON. FEMALE HOUSING -	BLACK -	1
X-1452380-X	ASSY NO / MATERIAL	DESCRIPTION	COLOUR	ITEM NO
70	WEIGHT OF EACH ASSY NO [g]			
QTY REQD PER ASSY	PARTS LIST			

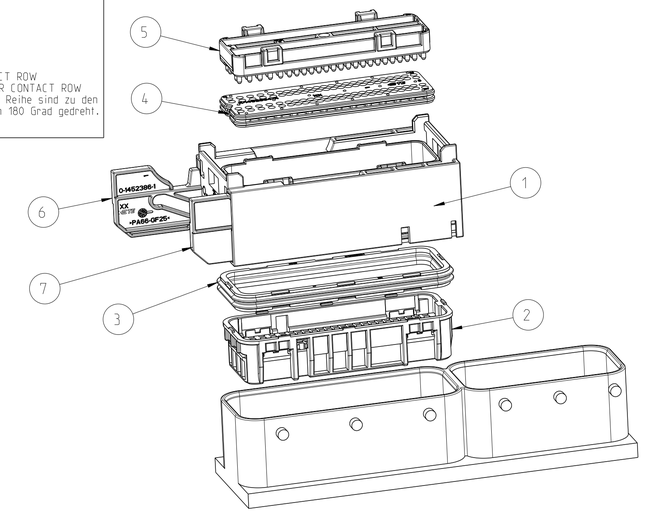

1:1

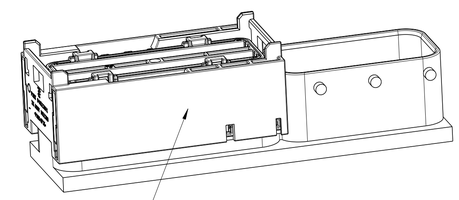

HOUSING IN ENDLOCKPOSITION WITHOUT COVER ASSY.
Gehaeuse in Endraststellung, ohne Kappenassy

NOTES:
Bemerkungen:

1 ASSY. USED WITH PARTS:
Assy verwendet mit folgenden Teilen:
HEADER BOSCH: PN: 000 20633 614
HEADER TE: PN: 0-1565428-1

THE HEADER IS NOT A PART OF THE DELIVERED ASSY.
Der Header ist kein Bestandteil der gelieferten ASSY.

2 MATED WITH:
Passend zu:
COVER PN: 1452389, 0-1452862-1
2-NDARY LOCK PN: 0-1452388-1
Kappe PN: 1452389, 0-1452862-1
2te Kontaktsicherung PN: 0-1452388-1

3 SEALING FUNCTION REQUIRES ONLY FOLLOWING WIRE SIZE DIAMETERS FOR THE SIGNAL TERMINALS:
Zur Sicherstellung der Dichtigkeit duerfen folgende Drahtquerschnitte bei den Signalkontakten verwendet werden:

a) 0.5mm^2 - 0.75mm^2 = ISO Ø1.4-1.9mm
FOR ALL WITH "X" MARKED CAVITIES, SEE PINOUT CONFIGUARATION TABLE
fuer alle markierten Felder mit "X" in der Pinbelegungstabelle

b) 1.0mm^2 - 1.5mm^2 = ISO Ø1.9-2.4mm
FOR ALL WITH NUMBERED CAVITIES, SEE PINOUT CONFIGUARATION TABLE
fuer alle nummerierten Felder in der Pinbelegungstabelle

4 ASSY DELIVERED WITH SLIDES IN ENDLOCK POSITION
Anlieferungszustand Schieber in Endraststellung

5 TE-PN SHOWN AS "NOT USED" WERE RAISED FOR THE CONNECTOR TE-PN: X-1452419-X
TE-Nr. mit "NOT USED" in der Pinbelegungstabelle werden verwendet im Stecker TE-Nr: X-1452419-X

6 TE-PN SHOWN AS "NOT USED" WERE RAISED FOR THE CONNECTOR TE-PN: X-1452423-X
TE-Nr. mit "NOT USED" in der Pinbelegungstabelle werden verwendet im Stecker TE-Nr: X-1452423-X

INSPECTION DIMENSION
Kontrollmasse

MARKING FOR PINOUTCONFIGURATION
SEE TABLE SHEET 2
Markierung fuer Pinoutkonfigkonfiguration
siehe Tabelle Blatt 2

A-A

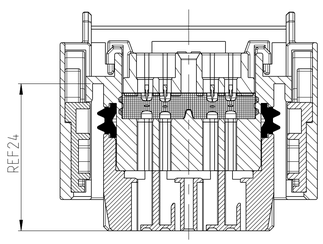

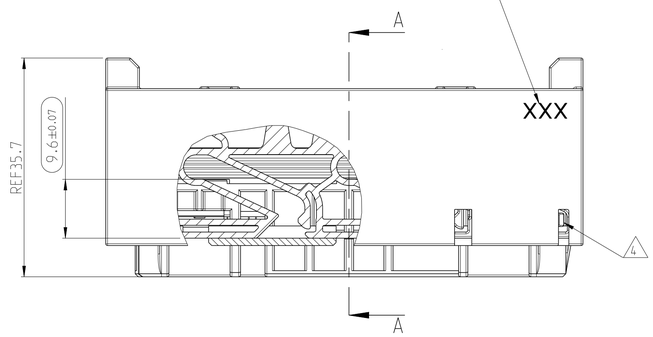

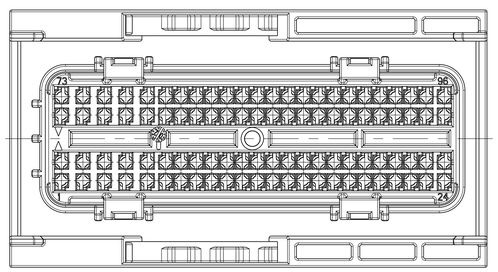

* 1394897 WILL BE REPLACED DURING NEXT YEAR BY 1670144
* 1394897 wird innerhalb eines Jahres ersetzt durch 1670144

TERMINALS TE PN TE Kontakte PN	FINISH Oberflaeche	WIRE SIZE (mm^2) Drahtquerschnitt (mm^2)	NOTES Bemerkungen
0-1452503-3	SILVER PLATED	1.0 - 1.5	BLINDPLUG Blindstopfen 0.75mm^2 PN 1-1452424-1 BROWN / Braun 1.5mm^2 PN 1-1452424-2 BLUE / Blau
0-1670144-3 *		0.5 - 0.75	
~~0-1534594-3~~		~~0.25 - 0.35~~	
0-1452503-2	GOLD PLATED	1.0 - 1.5	
0-1670144-2 *		0.5 - 0.75	
~~0-1534594-2~~		~~0.25 - 0.35~~	
0-1452503-1	PRE-TIN	1.0 - 1.5	
0-1670144-1 *		0.5 - 0.75	
~~0-1534594-1~~		~~0.25 - 0.35~~	

THIS DRAWING IS A CONTROLLED DOCUMENT.

DIMENSIONS: mm

TOLERANCES UNLESS OTHERWISE SPECIFIED:
0 PLC ±
1 PLC ±
2 PLC ±
3 PLC ±
4 PLC ±
ANGLES ±0°

MATERIAL -
FINISH -

DWN	K.ROTH	12MAR2002
CHK	S.DENTER	12MAR2002
APVD	G.MUMPER	14MAR2002

PRODUCT SPEC
APPLICATION SPEC 114-18534-1
WEIGHT -

TE Connectivity

NAME 96POS. RECEPTACLE HOUSING ASSEMBLY --

SIZE	CAGE CODE	DRAWING NO	RESTRICTED TO
A1	00779	C-1452380	-

Customer Drawing SCALE 2:1 SHEET 1 OF 3 REV L7

THIS DRAWING IS UNPUBLISHED. RELEASED FOR PUBLICATION 2002
© COPYRIGHT 2002 - ALL RIGHTS RESERVED.

LOC	DIST	REVISIONS					
		P	LTR	DESCRIPTION	DATE	DWN	APVD
A1	-		-	SEE SHEET 1	-	-	-

				1	2	3	4	5	6	7	8	9	10	11	12	13	14	15	16	17	18	19	20	21	22	23	24	25	26	27	28	29	30	31	32	33	34	35	36	37	38	39	40	41	42	43	44	45	46	47	48	49	50	51	52	53	54	55	56	57	58	59	60	61	62	63	64	65	66	67	68	69	70	71	72	73	74	75	76	77	78	79	80	81	82	83	84	85	86	87	88	89	90	91	92	93	94	95	96
CD34	128	L	2-2141628-8	X	X	X		X		X			X		X		X	X	X	X	X	X	X					X	X					X			X		X	X	X			X	X	X	X		X				X	X		X		X		X	X	X		X		X		X		X	X				X	X	X	X		X		X		X	X	X		X	X	X	X	X	X	X	X			X	X
-	099	L	9-1452380-9	X	X	X	X	X	X	X	X	X	X	X	X	X	X	X	X	X	X	X	X	X	X	X	X	X	X	X	X	X	X	X	X	X	X	X	X	X	X	X	X	X	X	X	X	X	X	X	X	X	X	X	X	X	X	X	X	X	X	X	X	X	X	X	X	X	X	X	X	X	X	X	X	X	X	X	X	X	X	X	X	X	X	X	X	X	X	X	X	X	X	X	X
GS41	089	L	8-1452380-9	X		X				X	X	X	X	X	X		X	X	X		X	X		X	X			X	X					X	X	X	X	X	X		X	X	X		X	X	X	X	X	X	X	X		X				X	X		X			X	X	X	X							X		X	X					X	X		X			X		X	X	X	X	X				X	
I5DEU5 DT 0846	081	L	8-1452380-1	X	X		X	X	X	X	X		X	X		X					X		X	X			X	X	X	X	X	X	X	X	X	X	X	X	X			X			X	X		X	X	X	X	X	X	X		X			X		X		X	X	X		X	X	X	X	X		X	X	X	X	X		X	X	X	X	X	X	X	X		X		X		X	X	X				X	X
I5DEU5 ST 0846	080	L	8-1452380-0	X	X		X	X	X	X	X		X	X		X		X	X		X		X	X			X	X	X	X	X	X	X	X	X	X	X	X	X			X			X	X		X	X		X	X	X	X	X	X			X		X		X	X	X		X	X	X	X	X		X	X	X	X	X		X	X	X	X	X	X	X	X		X		X		X	X	X				X	X
Mazda 3&6	079	L	7-1452380-9	X		X			X	X	X		X		X	X	X	X	X	X	X	X	X	X				X	X				X	X	X	X	X	X	X	X	X	X	X		X	X		X	X	X	X	X		X			X	X	X	X	X	X	X	X	X		X		X	X	X					X	X				X		X					X	X			X	X	X	X	X	X		
-	074	L	7-1452380-4	X	X		X	X	X											X			X				X	X		X	X	X	X											X									X			X				X		X				X		X	X	X	X	X	X		X			X		X	X		X	X		X	X		X		X				X	X	X		X
YUCHAI 4W DIESEL	073	L	7-1452380-3		X	X	X				X	X		X			X											X	X					X	X	X		X		X	X				X				X	X	X	X		X					X	X		X	X	X		X	X				X						X		X						X	X	X	X	X	X	X										
Y2 SI6T	068	L	6-1452380-8						X	X	X	X	X	X	X	X	X			X	X	X	X	X	X	X	X						X			X	X			X			X		X	X		X	X	X	X								X	X	X	X	X	X	X	X		X	X	X	X	X	X	X	X	X	X	X	X		X	X	X	X	X	X	X	X	X		X		X		X			X	
I5 TURBO 07/20	067	L	6-1452380-7	X	X	X				X			X		X		X	X	X	X	X	X	X					X	X					X			X		X	X	X			X	X	X	X		X			X	X	X		X		X		X	X	X		X		X		X		X	X				X	X	X	X		X		X		X	X	X		X	X	X	X	X	X	X	X			X	X
I5 NON TURBO 07/20	066	L	6-1452380-6			X	X	X					X	X	X	X	X	X	X	X		X	X	X	X	X	X										X	X					X						X	X	X	X				X					X	X	X		X	X				X	X	X	X	X	X		X	X	X		X	X	X	X	X	X	X				X					X	X		X
X250 V8 SC	062	L	6-1452380-2	X	X				X	X	X		X	X	X			X			X	X	X		X	X	X	X	X	X	X	X	X			X	X				X	X	X	X	X	X		X	X	X			X	X	X	X	X	X	X	X	X	X	X	X	X		X	X	X	X	X	X	X	X	X		X	X	X	X	X	X	X	X	X	X	X	X	X	X	X			X		X		
X250 V8 NA	061	L	6-1452380-1	X	X				X	X	X		X	X	X			X			X	X	X		X	X	X	X	X	X	X	X	X			X	X						X	X	X	X		X	X	X			X	X	X	X	X	X	X	X	X	X	X	X	X		X	X	X	X	X	X	X	X	X		X	X	X	X	X	X	X	X	X	X	X	X	X	X	X			X				
X250	060	L	6-1452380-0	X	X				X	X	X		X	X	X			X			X	X	X		X	X	X	X	X	X	X	X	X			X	X						X	X	X	X		X	X	X									X	X	X	X	X	X	X		X	X	X	X	X	X	X	X	X		X	X	X	X	X	X	X	X	X	X		X	X	X	X	X		X				
I5 NON TURBO ULEV	059	L	5-1452380-9			X	X	X						X	X	X		X	X	X		X	X	X	X	X	X										X	X											X	X	X	X				X					X	X	X		X	X				X	X	X	X	X	X		X	X	X		X	X	X	X	X	X	X				X			X		X	X		X
I5 NON TURBO ULEV OIL LT	058	L	5-1452380-8			X	X	X					X	X	X	X	X	X	X	X		X	X	X	X	X	X										X	X					X						X	X	X	X				X					X	X	X		X	X				X	X	X	X	X	X		X	X	X		X	X	X	X	X	X	X				X			X		X	X		X
I5 NON TURBO PZEV	057	L	5-1452380-7			X	X	X						X	X	X		X	X	X		X	X	X	X	X	X										X	X				X				X			X	X	X	X	X			X					X	X	X		X	X	X			X	X	X	X	X	X		X	X	X		X	X	X	X	X	X	X				X			X		X	X	X	X
I5 TURBO OIL LT	056	L	5-1452380-6	X	X	X				X		X	X		X		X	X	X	X	X	X	X					X	X					X			X		X	X	X			X	X	X	X		X			X	X	X		X		X		X	X	X		X		X		X		X	X				X	X	X	X		X		X		X	X	X		X	X	X	X	X	X	X	X			X	X
CD34X	054	L	5-1452380-4	X	X	X		X		X			X		X		X	X	X	X	X	X	X					X	X					X			X		X	X	X			X	X	X	X		X			X	X	X		X		X		X	X	X		X		X		X		X	X				X	X	X	X		X		X		X	X	X		X	X	X	X	X	X	X	X			X	X
X150	052	L	5-1452380-2	X	X				X	X	X		X	X	X			X	X		X	X	X		X	X	X		X	X	X	X	X			X	X				X	X	X	X	X	X		X	X	X			X	X	X	X	X	X	X	X	X	X	X	X	X		X	X	X	X	X	X	X	X	X		X	X	X	X	X	X	X	X	X	X	X	X	X	X	X	X	X		X		X		
C307ST	050	L	5-1452380-0	X	X	X		X		X		X			X		X	X	X	X	X	X						X	X	X				X			X		X	X	X			X	X	X	X		X			X	X	X		X		X		X	X	X		X		X		X		X	X				X	X	X	X		X		X		X	X	X			X	X	X	X	X	X	X			X	X
S16 NON TURBO AUTO	048	L	4-1452380-8						X	X	X	X	X	X	X	X	X			X	X	X	X	X	X	X	X						X	X	X	X	X				X	X	X	X	X	X		X	X	X	X								X	X	X	X	X	X	X	X		X	X	X	X	X	X	X		X	X	X	X	X	X	X	X	X	X	X	X	X	X		X	X	X	X	X				
V8 AUTO	047	L	4-1452380-7						X	X			X	X	X		X	X	X	X	X	X	X		X		X	X	X	X	X	X	X	X	X	X	X						X	X	X	X		X	X	X	X	X					X	X	X	X	X	X	X	X	X	X	X	X	X	X	X	X	X	X	X		X	X	X	X	X	X	X	X	X	X	X	X	X	X	X	X	X	X	X			X	
I5T	046	L	4-1452380-6	X	X	X		X		X			X		X		X	X	X	X	X	X	X					X	X					X			X		X	X	X			X	X	X	X		X			X	X	X		X		X		X	X	X		X		X		X		X	X				X	X	X	X		X		X		X	X	X		X	X	X	X	X	X	X	X			X	X
X206 X356	041	L	4-1452380-1						X	X	X		X	X	X			X	X		X	X	X		X	X	X		X	X	X	X	X			X	X				X	X	X	X	X	X		X	X	X		X	X	X	X	X	X	X	X	X	X	X	X	X	X		X	X	X	X	X	X	X	X	X		X	X	X	X	X	X	X	X	X	X	X	X	X	X	X	X			X		X		
X206 X356	040	L	4-1452380-0			X			X	X	X		X	X	X			X	X		X	X	X		X	X	X		X	X	X	X	X			X	X						X	X	X	X		X	X	X									X	X	X	X	X	X	X		X	X	X	X	X	X	X	X	X		X	X	X	X	X	X	X	X	X	X		X	X	X	X	X		X				X
X206 X356 X150	039	L	3-1452380-9						X	X	X		X	X	X			X	X		X	X	X		X	X	X		X	X	X	X	X			X	X						X	X	X	X		X	X	X			X	X	X	X	X	X	X	X	X	X	X	X	X		X	X	X	X	X	X	X	X	X		X	X	X	X	X	X	X	X	X	X	X	X	X	X	X			X				
V6 CEP	038	L	3-1452380-8	X	X	X			X	X	X		X	X	X			X	X		X	X	X		X	X	X		X	X	X	X	X			X	X						X	X	X	X		X	X	X									X	X	X	X	X	X	X		X	X	X	X	X	X	X	X	X		X	X	X	X	X	X	X	X	X	X		X	X	X	X	X		X				X
V8 N/A	037	L	3-1452380-7	X	X				X	X	X		X	X	X			X	X		X	X	X		X	X	X		X	X	X	X	X			X	X						X	X	X	X		X	X	X			X	X	X	X	X	X	X	X	X	X	X	X	X		X	X	X	X	X	X	X	X	X		X	X	X	X	X	X	X	X	X	X	X	X	X	X	X			X				
V8 SC	036	L	3-1452380-6	X	X				X	X	X		X	X	X			X	X		X	X	X		X	X	X		X	X	X	X	X			X	X				X	X	X	X	X	X		X	X	X		X	X	X	X	X	X	X	X	X	X	X	X	X	X		X	X	X	X	X	X	X	X	X		X	X	X	X	X	X	X	X	X	X	X	X	X	X	X			X		X		
-	035		NOT USED △5	1	2	3	X	X	X	X	X	X	X	X				X			X	X		X		X	X	25	26		X	X		X	X	X	X		X	X			X	X	X		X			X	X	49	50		X	X			X	X	X	X	X	X	X	X	X	X	X	X	X	X				X	X	73	74	75		X	X		X	X	X		X	X	X	X	X		X		X	X	X		
V6 CEP X206	034	L	3-1452380-4	X	X	X			X	X	X		X	X	X			X	X		X	X	X		X	X	X		X	X	X	X	X			X	X						X	X	X	X		X	X	X									X	X	X	X	X	X	X		X	X	X	X	X	X	X	X	X		X	X	X	X	X	X	X	X	X	X		X	X	X	X	X		X				X
V8 NA X206	033	L	3-1452380-3	X	X				X	X	X		X	X	X			X	X		X	X	X		X	X	X		X	X	X	X	X			X	X						X	X	X	X		X	X	X			X	X	X	X	X	X	X	X	X	X	X	X	X		X	X	X	X	X	X	X	X	X		X	X	X	X	X	X	X	X	X	X	X	X	X	X	X			X				
V8 SC X206	032	L	3-1452380-2	X	X				X	X	X		X	X	X			X	X		X	X	X		X	X	X		X	X	X	X	X			X	X				X	X	X	X	X	X		X	X	X		X	X	X	X	X	X	X	X	X	X	X	X	X	X		X	X	X	X	X	X	X	X	X		X	X	X	X	X	X	X	X	X	X	X	X	X	X	X			X		X		
-	031		NOT USED △6			3			X	X			X	X	X			X			X	X	X			X			26	27	28	29	X				X				X				X	X					48								X	X	X	X	X	X	X	X	X	X	X	X	X	X	X		72		74	75	76	77	X	X	X	X	X	X	X						X		X	X	X	X	96
-	029		NOT USED △6			3			X	X	X		X	X	X			X			X	X	X			X	24		26	27	28	29	X			X	X				X	X			X	X			X	X	48						X	X	X	X	X	X	X	X	X	X	X	X	X	X	X	X	X	X	72		74	75	76	77	X	X	X	X	X	X	X	X							X	X	X	X	96
-	028		NOT USED △6	1	2				X	X	X		X	X	X			X	X		X	X	X		X	X	24		26	27	28	29	X			X	X				X	X	X	X	X	X		X	X	X		49	50	51	52	53	X	X	X	X	X	X	X	X	X	X	X		X	X	X	X	X	X	X	X	72		74	75	76	77	X	X	X	X	X	X	X	X	X	X	X	X	X		X		X		
-	027		NOT USED △6	1	2				X	X	X		X	X	X			X	X		X	X	X		X	X	24		26	27	28	29	X			X	X						X	X	X	X		X	X	X			50	51	52	53	X	X	X	X	X	X	X	X	X	X	X		X	X	X	X	X	X	X	X	72		74	75	76	77	X	X	X	X	X	X	X	X	X	X	X	X	X		X				
-	026		NOT USED △6	1	2	3			X	X	X		X	X	X			X	X		X	X	X		X	X	24		26	27	28	29	X			X	X						X	X	X	X		X	X	X									X	X	X	X	X	X	X		X	X	X	X	X	X	X	X	72		74	75	76	77	X	X	X	X	X	X	X		X	X	X	X	X		X				96
-	025		NOT USED △5	1	2	3	X	X	X	X	X	X	X	X				X			X	X		X		X	X	25	26		X	X		X	X	X	X		X	X			X	X	X	X	X		X	X	X	49	50		X	X			X	X	X	X	X	X	X	X	X	X	X	X	X	X				X	X	73	74	75	X	X	X	X	X	X	X		X	X	X	X	X		X		X	X	X		
-	024		NOT USED △6			3			X	X	X		X	X	X			X			X	X	X			X	24		26	27	28	29	X			X	X				X	X			X	X			X	X	48		50	51	52	53	X	X	X	X	X	X	X	X	X	X	X	X	X	X	X	X	X	X	72		74	75	76	77	X	X	X	X	X	X	X	X							X	X	X	X	96
-	023		NOT USED △6			3			X	X	X		X	X	X			X			X	X	X			X			26	27	28	29	X			X	X								X	X			X		48		50	51	52	53	X	X	X	X	X	X	X	X	X	X	X	X	X	X	X	X	X		72		74	75	76	77	X	X	X	X	X	X	X	X	X	X					X	X	X	X	96
-	022	L	2-1452380-2	X	X	X				X		X			X		X	X	X	X	X	X						X	X					X			X		X	X	X			X	X	X	X		X			X	X	X		X		X		X	X	X		X		X		X		X	X				X	X	X	X		X		X		X	X	X			X	X	X	X	X	X	X			X	X
ENGINE V8	021	L	2-1452380-1						X	X			X	X	X		X	X	X	X	X	X	X		X		X	X	X	X	X	X	X	X	X	X	X						X	X	X	X		X	X	X	X	X					X	X	X	X	X	X	X	X	X	X	X	X	X	X	X	X	X	X	X		X	X	X	X	X	X	X	X	X	X	X	X	X	X	X	X	X	X	X			X	
KOELN V6 T5	019		NOT USED △6	1	2	3			X	X			X	X	X			X			X	X	X			X			26	27	28	29	X				X				X				X	X					48								X	X	X	X	X	X	X	X	X	X	X	X	X	X	X		72		74	75	76	77	X	X	X	X	X	X	X						X		X	X	X	X	96
AJ43 ENGINES	018		NOT USED △6	1	2	3			X	X	X		X	X	X			X			X	X	X			X	24		26	27	28	29	X			X	X				X	X			X	X			X	X	48		50	51	52	53	X	X	X	X	X	X	X	X	X	X	X	X	X	X	X	X	X	X	72		74	75	76	77	X	X	X	X	X	X	X	X							X	X	X	X	96
TURBO OIL SW 04:18	017	L	1-1452380-7	X	X	X										X		X	X	X	X	X		X				X	X							X		X	X	X	X	X	X		X	X	X					X	X	X		X		X	X		X	X	X	X	X	X		X	X	X		X	X		X	X	X	X		X		X	X		X	X				X	X			X	X	X	X		X
TURBO OIL QLT 03:38	016	L	1-1452380-6	X	X	X										X		X	X	X	X	X	X					X	X									X	X	X	X	X	X		X	X	X					X	X	X		X		X	X		X	X	X	X	X	X		X	X	X		X	X		X	X	X	X		X		X	X		X	X		X	X	X	X			X	X	X	X		X
TURBO OIL QLT 04:18	015	L	1-1452380-5	X	X	X										X		X	X	X	X	X	X	X				X	X									X	X	X	X	X	X		X	X	X					X	X	X		X		X	X		X	X	X	X	X	X		X	X	X		X	X		X	X	X	X		X		X	X		X	X		X	X	X	X			X	X	X	X		X
ENGINE ULEV OIL SW 04:18	014	L	1-1452380-4			X	X	X						X	X	X		X	X	X		X	X	X	X	X	X										X	X											X	X	X	X				X					X	X	X		X	X				X	X	X	X	X	X		X	X	X		X		X	X	X	X	X				X			X		X	X		X
ENGINE ULEV OIL QLT 03:38	013	L	1-1452380-3			X	X	X					X	X	X	X	X	X	X	X		X	X	X	X	X	X										X	X					X						X	X	X	X				X					X	X	X		X	X				X	X	X	X	X	X		X	X	X		X		X	X	X	X	X								X	X		X
ENGINE ULEV OIL QLT 04:18	012	L	1-1452380-2			X	X	X					X	X	X	X	X	X	X	X		X	X	X	X	X	X										X	X					X						X	X	X	X				X					X	X	X		X	X				X	X	X	X	X	X		X	X	X		X		X	X	X	X	X				X					X	X		X
ENGINE SULEV 04:18	011	L	1-1452380-1			X	X	X						X	X	X		X	X	X		X	X	X	X	X	X										X	X				X				X			X	X	X	X	X			X					X	X	X		X	X	X			X	X	X	X	X	X		X	X	X		X		X	X	X	X	X				X			X		X	X	X	X
ENGINE V8	009		NOT USED △6						X	X			X	X	X		X	X	X	X	X	X	X		X		24	25	26	27	28	29	X	X	X	X	X						X	X	X	X		X	X	X	48	49					X	X	X	X	X	X	X	X	X	X	X	X	X	X	X	X	X	X	72		74	75	76	77	X	X	X	X	X	X	X	X	X	X	X	X	X	X	X	X			X	
ENGINE AJ41	008		NOT USED △6	1	2	3			X	X	X		X	X	X			X			X	X	X			X			26	27	28	29	X			X	X								X	X			X		48		50	51	52	53	X	X	X	X	X	X	X	X	X	X	X	X	X	X	X	X	X		72		74	75	76	77	X	X	X	X	X	X	X	X	X	X					X	X	X	X	96
TURBO OIL SW 03:38	007	L	0-1452380-7	X	X	X										X		X	X	X	X	X						X	X							X		X	X	X	X	X	X		X	X	X					X	X	X		X		X	X		X	X	X	X	X	X		X	X	X		X	X		X	X	X	X		X		X	X		X	X				X	X			X	X	X	X		X
ENGINE ULEV OIL SW 03:38	006	L	0-1452380-6			X	X	X						X	X	X		X	X	X		X	X	X	X	X	X										X	X											X	X	X	X				X					X	X	X		X	X				X	X	X	X	X	X		X	X	X		X		X	X	X	X	X							X		X	X		X
ENGINE SULEV 03:38	005	L	0-1452380-5			X	X	X						X	X	X		X	X	X		X	X	X	X	X	X										X	X				X				X			X	X	X	X	X			X					X	X	X		X	X	X			X	X	X	X	X	X		X	X	X		X		X	X	X	X	X							X		X	X	X	X
TURBO	004	L	0-1452380-4	X	X	X										X		X	X	X	X	X	X	X				X	X							X		X	X	X	X	X	X		X	X	X					X	X	X		X		X	X		X	X	X	X	X	X		X	X	X		X	X		X	X	X	X		X		X	X		X	X		X	X	X	X			X	X	X	X		X
NEDC	003		NOT USED △5	1	2	3			X			X	X	X				X	X	X	X	X	X		X	X		25	26			X		X	X	X	X	X	X	X		X	X		X	X		X		X	X	49	50			X			X	X		X	X	X			X	X	X							73	74	75		X			X	X	X		X		X	X	X	X	X			X	X	X	
ENGINE ULEV	002	L	0-1452380-2			X	X	X					X	X	X	X	X	X	X	X		X	X	X	X	X	X										X	X					X					X	X	X	X	X				X					X	X	X		X	X				X	X	X	X	X	X		X	X	X		X		X	X	X	X	X				X			X		X	X		X
ENGINE SULEV	001	L	0-1452380-1			X	X	X					X	X	X	X	X	X	X	X		X	X	X	X	X	X										X	X				X	X			X		X	X	X	X	X	X			X					X	X	X		X	X	X			X	X	X	X	X	X		X	X	X		X	X	X	X	X	X	X				X			X		X	X	X	X
NOTES Bemerkungen	MARKING FOR PINOUT-CONFIG-URATION Markierung fuer Pinout-konfig-uration	REV	TE-PN TE-Nr	1	2	3	4	5	6	7	8	9	10	11	12	13	14	15	16	17	18	19	20	21	22	23	24	25	26	27	28	29	30	31	32	33	34	35	36	37	38	39	40	41	42	43	44	45	46	47	48	49	50	51	52	53	54	55	56	57	58	59	60	61	62	63	64	65	66	67	68	69	70	71	72	73	74	75	76	77	78	79	80	81	82	83	84	85	86	87	88	89	90	91	92	93	94	95	96

BLANKED CAVITIES INDICATE CLOSED LOCATIONS
Leere Felder kennzeichnen geschlossene Kammern

NUMBERED CAVITIES INDICATE OPEN LOCATIONS FOR TERMINALS WITH WIRE SIZE > 0.75mm2 △3
Nummerierte Felder kennzeichnen offene Kammern fuer Kontakte mit Drahtquerschnitt >0.75mm2

WITH "X" MARKED CAVITIES INDICATE OPEN LOCATIONS FOR TERMINALS WITH WIRE SIZE 0.5 - 0.75mm2 △3
Markierte Felder mit "X" kennzeichnen offene Kammern fuer Kontakte mit Drahtquerschnitt 0.5 - 0.75mm2

THIS DRAWING IS A CONTROLLED DOCUMENT.

DWN	K.ROTH	12MAR2002
CHK	S.DENTER	12MAR2002
APVD	G.MUMPER	14MAR2002

DIMENSIONS: mm
TOLERANCES UNLESS OTHERWISE SPECIFIED: 0 PLC ± ; 1 PLC ± ; 2 PLC ± ; 3 PLC ± ; 4 PLC ± ; ANGLES ±1°
MATERIAL - -
FINISH - -
PRODUCT SPEC -
APPLICATION SPEC 114-18534-1
WEIGHT -

TE Connectivity

NAME: 96POS. RECEPTACLE HOUSING ASSEMBLY --

SIZE A1 | CAGE CODE 00779 | DRAWING NO C-1452380 | RESTRICTED TO -

Customer Drawing | SCALE 2:1 | SHEET 2 OF 3 | REV L7

4805 (3/11)

THIS DRAWING IS UNPUBLISHED. | RELEASED FOR PUBLICATION 2002
© COPYRIGHT 2002 - | ALL RIGHTS RESERVED.

LOC	DIST
A1	-

REVISIONS					
P	LTR	DESCRIPTION	DATE	DWN	APVD
	-	SEE SHEET 1	-	-	-

L7

NOTES	MARKING	REV	TE-PN	1	2	3	4	5	6	7	8	9	10	11	12	13	14	15	16	17	18	19	20	21	22	23	24	25	26	27	28	29	30	31	32
Nissan-1	**104**	L	**0-2141628-4**	X		X				X	X	X		X	X	X	X	X	X	X	X	X	X	X	X	X		X	X					X	X
-	**103**	L	**0-2141628-3**			X		X	X	X		X	X			X	X	X	X	X	X	X	X	X	X	X			X			X		X	
-	**102**	L	**0-2141628-2**	X		X		X	X	X	X	X	X		X	X	X	X	X	X	X	X	X	X	X	X		X	X					X	X
-	**101**	L	**0-2141628-1**		X	X	X				X			X			X											X	X					X	X
NOTES Bemerkungen	MARKING FOR PINOUT-CONFIG-URATION Markierung fuer Pinout-konfig-uration	REV	TE-PN TE-Nr	1	2	3	4	5	6	7	8	9	10	11	12	13	14	15	16	17	18	19	20	21	22	23	24	25	26	27	28	29	30	31	32

NOTES	MARKING	REV	TE-PN	33	34	35	36	37	38	39	40	41	42	43	44	45	46	47	48	49	50	51	52	53	54	55	56	57	58	59	60	61	62	63	64
Nissan-1	**104**	L	**0-2141628-4**	X		X	X	X	X	X	X		X	X	X	X	X	X	X	X		X			X	X			X	X	X	X			
-	**103**	L	**0-2141628-3**	X	X			X	X	X	X		X	X		X	X		X	X		X			X	X			X		X	X			
-	**102**	L	**0-2141628-2**	X	X		X	X	X	X	X		X	X	X	X	X	X	X	X		X			X	X			X	X	X	X			
-	**101**	L	**0-2141628-1**					X	X				X	X			X	X	X	X		X					X	X		X		X			X
NOTES Bemerkungen	MARKING FOR PINOUT-CONFIG-URATION Markierung fuer Pinout-konfig-uration	REV	TE-PN TE-Nr	33	34	35	36	37	38	39	40	41	42	43	44	45	46	47	48	49	50	51	52	53	54	55	56	57	58	59	60	61	62	63	64

NOTES	MARKING	REV	TE-PN	65	66	67	68	69	70	71	72	73	74	75	76	77	78	79	80	81	82	83	84	85	86	87	88	89	90	91	92	93	94	95	96
Nissan-1	**104**	L	**0-2141628-4**							X		X	X				X					X	X	X											
-	**103**	L	**0-2141628-3**							X		X	X						X													X			
-	**102**	L	**0-2141628-2**							X		X	X						X																
-	**101**	L	**0-2141628-1**				X						X		X			X					X	X	X	X	X								
NOTES Bemerkungen	MARKING FOR PINOUT-CONFIG-URATION Markierung fuer Pinout-konfig-uration	REV	TE-PN TE-Nr	65	66	67	68	69	70	71	72	73	74	75	76	77	78	79	80	81	82	83	84	85	86	87	88	89	90	91	92	93	94	95	96

BLANKED CAVITIES INDICATE CLOSED LOCATIONS
Leere Felder kennzeichnen geschlossene Kammern

NUMBERED CAVITIES INDICATE OPEN LOCATIONS FOR TERMINALS WITH WIRE SIZE > 0.75mm2 △3
Nummerierte Felder kennzeichnen offene Kammern fuer Kontakte mit Drahtquerschnitt >0.75mm2

WITH "X" MARKED CAVITIES INDICATE OPEN LOCATIONS FOR TERMINALS WITH WIRE SIZE 0.5 - 0.75mm2 △3
Markierte Felder mit "X" kennzeichnen offene Kammern fuer Kontakte mit Drahtquerschnitt 0.5 - 0.75mm2

THIS DRAWING IS A CONTROLLED DOCUMENT.

DIMENSIONS:	TOLERANCES UNLESS OTHERWISE SPECIFIED:
mm	0 PLC ±- 1 PLC ±- 2 PLC ±- 3 PLC ±- 4 PLC ±- ANGLES ±1°
MATERIAL - -	FINISH - -

DWN	K.ROTH	12MAR2002
CHK	S.DENTER	12MAR2002
APVD	G.MUMPER	14MAR2002
PRODUCT SPEC	-	
APPLICATION SPEC	114-18534-1	
WEIGHT	-	

TE Connectivity

NAME: 96POS. RECEPTACLE HOUSING ASSEMBLY
--

SIZE	CAGE CODE	DRAWING NO	RESTRICTED TO
A1	00779	C-1452380	-

Customer Drawing

SCALE	SHEET	OF	REV
2:1	3	3	L7

4805 (3/11)