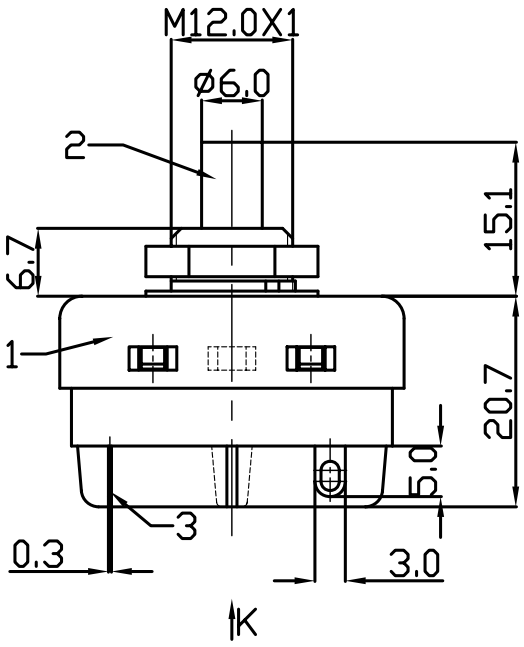

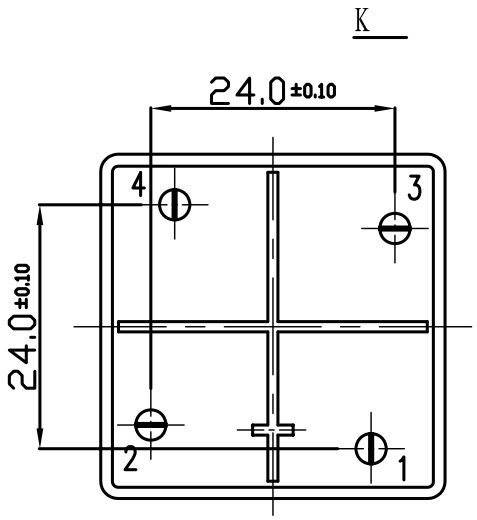

(SPECIFICATINS)

1Product Name:Rotary Switch

2(RATING):FI:1A 250VAC

3(OPERATION LIFE):10,000Cycles At Full Load

4(WITHSTAND VOLTAGE):AC 2000V 1Min

5(Operating Temperature):T85

Wiring Diagram

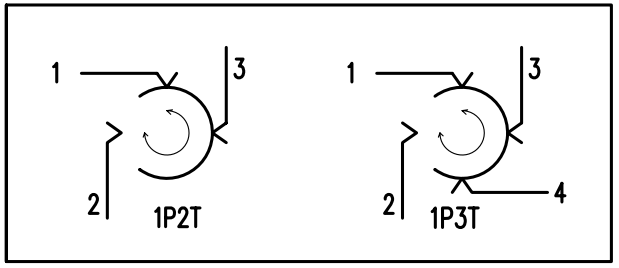

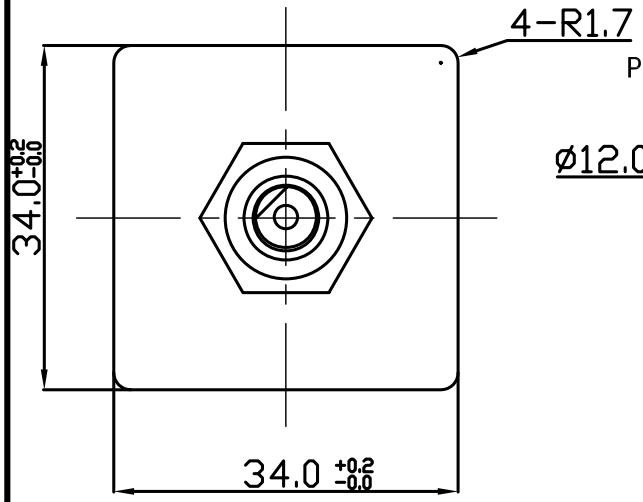

Panel Installation Size

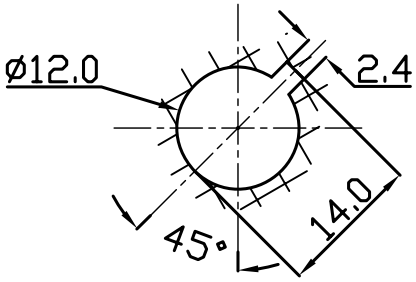

Panel Installation
Thickness 0.8~2mm

NO.	PART NAME	MATERIALS AND SPECIFICATION	COUNT	MANUFACTURE	FILE NO
3	TERMINAL	PHOSPHOR BRONZE 0.3mm THICK.	3		
2	Rotary BUTTON	ACETAL(POM)DELRIN 100P	1		E66288
1	UPPER ENCLOSURE	POLYCARBONATE LEXAN 141L	1	GE PLASTICS	E121562(R

Assembly	RT-18