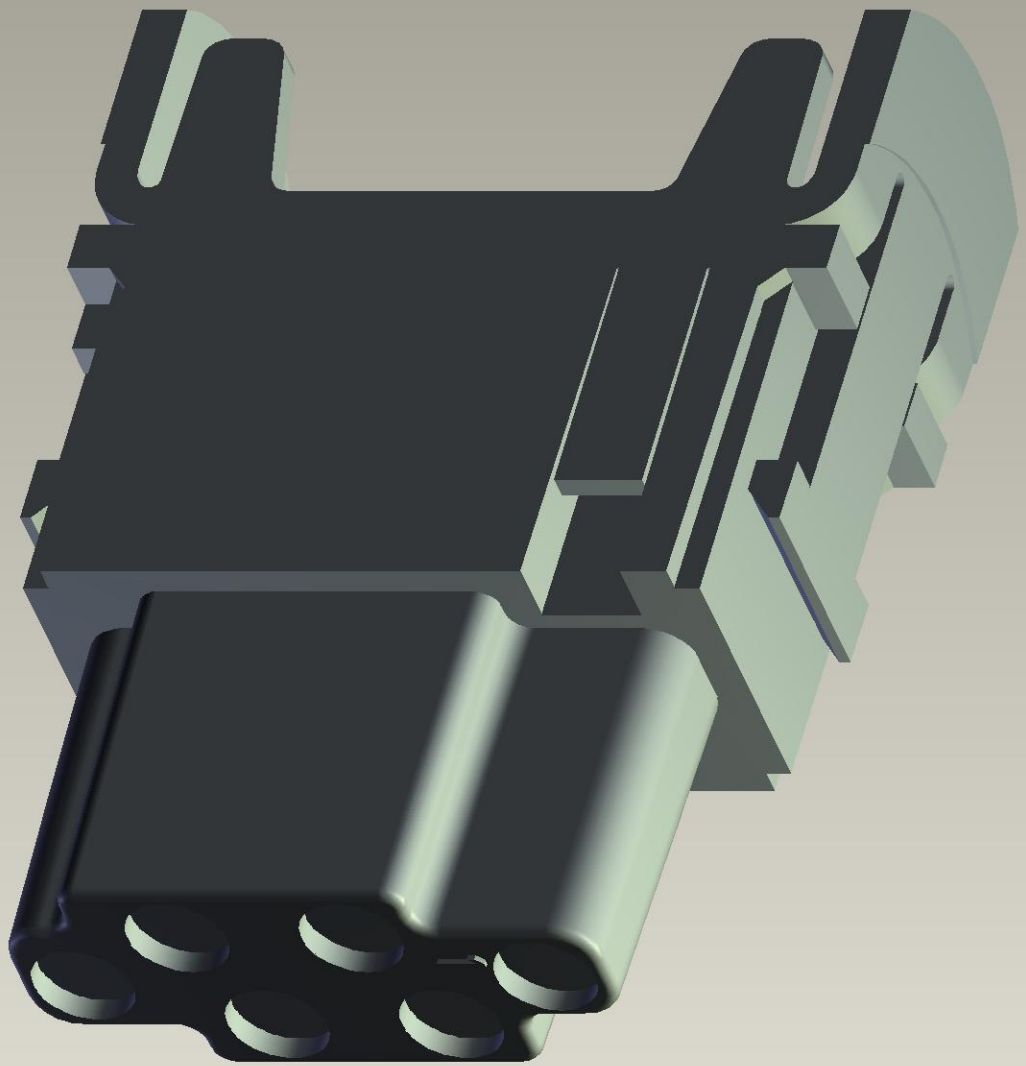

Instance:C-T2111062201-007