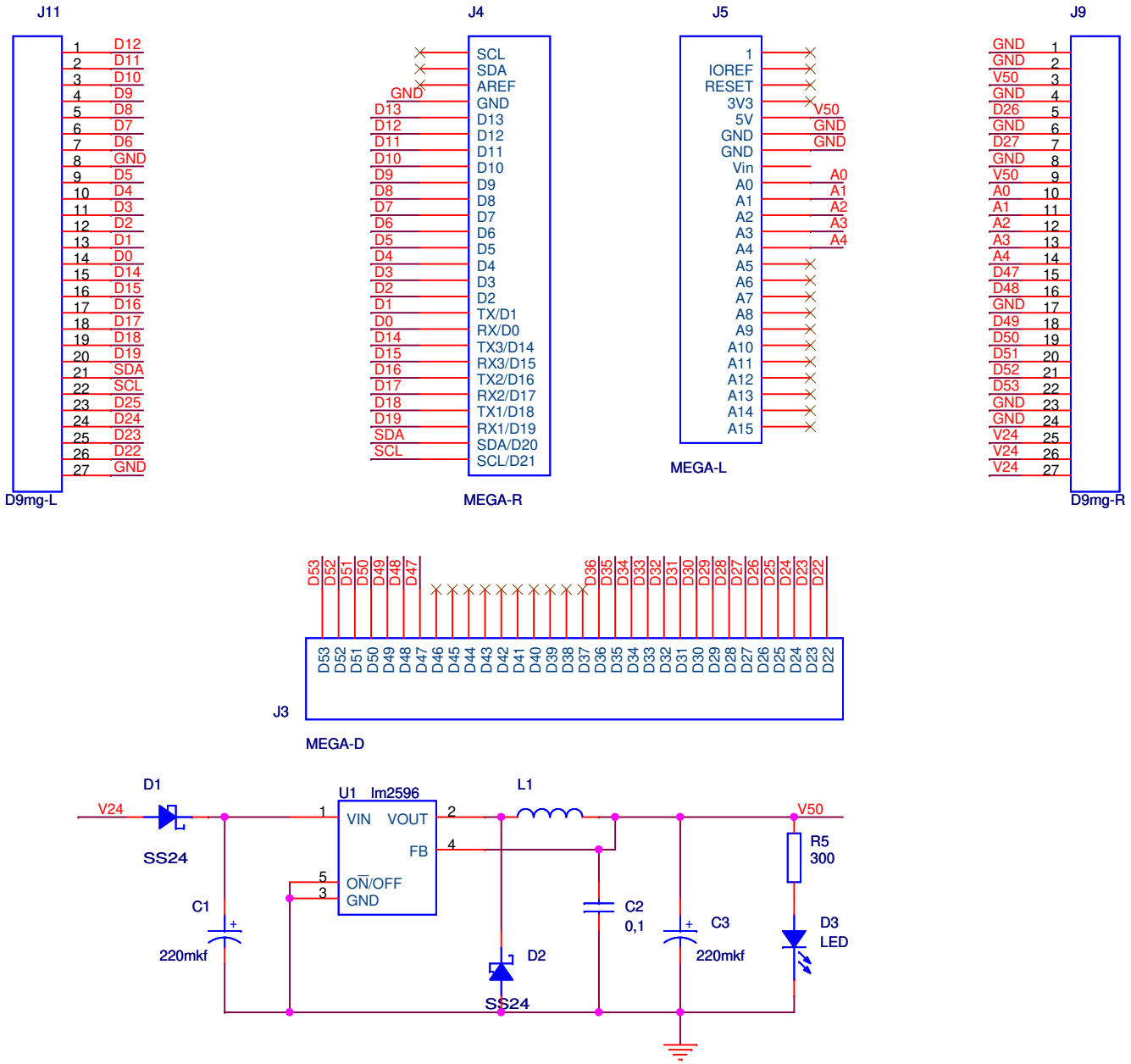

Title	LART	
Size A4	Document Number LA2560-ST	Rev 1.2
Date: Saturday, February 20, 2021	Sheet 1 of 1	